Please check the examination details below before entering your candidate information

Candidate surname	Other names

Centre Number | Candidate Number

Pearson Edexcel International GCSE (9–1)

Tuesday 13 June 2023

Morning (Time: 1 hour 15 minutes)

Paper reference **4CH1/2CR**

Chemistry

UNIT: 4CH1
PAPER: 2CR

You must have:
Calculator, ruler

Total Marks

Instructions

- Use **black** ink or ball-point pen.
- If pencil is used for diagrams/sketches/graphs it must be dark (HB or B).
- **Fill in the boxes** at the top of this page with your name, centre number and candidate number.
- Answer **all** questions.
- Answer the questions in the spaces provided – *there may be more space than you need.*
- Show all the steps in any calculations and state the units.

Information

- The total mark for this paper is 70.
- The marks for **each** question are shown in brackets – *use this as a guide as to how much time to spend on each question.*

Advice

- Read each question carefully before you start to answer it.
- Write your answers neatly and in good English.
- Try to answer every question.
- Check your answers if you have time at the end.

Turn over

©2023 Pearson Education Ltd.
N:1/1/

P 7 1 9 5 3 A 0 1 2 4

Pearson

The Periodic Table of the Elements

Key

relative atomic mass
atomic symbol
name
atomic (proton) number

1	2											3	4	5	6	7	0
							1 **H** hydrogen 1										4 **He** helium 2
7 **Li** lithium 3	9 **Be** beryllium 4											11 **B** boron 5	12 **C** carbon 6	14 **N** nitrogen 7	16 **O** oxygen 8	19 **F** fluorine 9	20 **Ne** neon 10
23 **Na** sodium 11	24 **Mg** magnesium 12											27 **Al** aluminium 13	28 **Si** silicon 14	31 **P** phosphorus 15	32 **S** sulfur 16	35.5 **Cl** chlorine 17	40 **Ar** argon 18
39 **K** potassium 19	40 **Ca** calcium 20	45 **Sc** scandium 21	48 **Ti** titanium 22	51 **V** vanadium 23	52 **Cr** chromium 24	55 **Mn** manganese 25	56 **Fe** iron 26	59 **Co** cobalt 27	59 **Ni** nickel 28	63.5 **Cu** copper 29	65 **Zn** zinc 30	70 **Ga** gallium 31	73 **Ge** germanium 32	75 **As** arsenic 33	79 **Se** selenium 34	80 **Br** bromine 35	84 **Kr** krypton 36
85 **Rb** rubidium 37	88 **Sr** strontium 38	89 **Y** yttrium 39	91 **Zr** zirconium 40	93 **Nb** niobium 41	96 **Mo** molybdenum 42	[98] **Tc** technetium 43	101 **Ru** ruthenium 44	103 **Rh** rhodium 45	106 **Pd** palladium 46	108 **Ag** silver 47	112 **Cd** cadmium 48	115 **In** indium 49	119 **Sn** tin 50	122 **Sb** antimony 51	128 **Te** tellurium 52	127 **I** iodine 53	131 **Xe** xenon 54
133 **Cs** caesium 55	137 **Ba** barium 56	139 **La*** lanthanum 57	178 **Hf** hafnium 72	181 **Ta** tantalum 73	184 **W** tungsten 74	186 **Re** rhenium 75	190 **Os** osmium 76	192 **Ir** iridium 77	195 **Pt** platinum 78	197 **Au** gold 79	201 **Hg** mercury 80	204 **Tl** thallium 81	207 **Pb** lead 82	209 **Bi** bismuth 83	[209] **Po** polonium 84	[210] **At** astatine 85	[222] **Rn** radon 86
[223] **Fr** francium 87	[226] **Ra** radium 88	[227] **Ac*** actinium 89	[261] **Rf** rutherfordium 104	[262] **Db** dubnium 105	[266] **Sg** seaborgium 106	[264] **Bh** bohrium 107	[277] **Hs** hassium 108	[268] **Mt** meitnerium 109	[271] **Ds** darmstadtium 110	[272] **Rg** roentgenium 111	Elements with atomic numbers 112–116 have been reported but not fully authenticated						

**** The lanthanoids (atomic numbers 58–71) and the actinoids (atomic numbers 90–103) have been omitted.***

The relative atomic masses of copper and chlorine have not been rounded to the nearest whole number.

P 7 1 9 5 3 A 0 2 2 2 4

DO NOT WRITE IN THIS AREA
DO NOT WRITE IN THIS AREA
DO NOT WRITE IN THIS AREA

GradeMax

DO NOT WRITE IN THIS AREA
DO NOT WRITE IN THIS AREA
DO NOT WRITE IN THIS AREA

BLANK PAGE

Answer ALL questions.

Some questions must be answered with a cross in a box ☒. If you change your mind about an answer, put a line through the box ☒ and then mark your new answer with a cross ☒.

1 (a) The table lists three subatomic particles.

Complete the table by giving the missing information.

(2)

Subatomic particle	Relative mass	Relative charge
proton		+1
neutron		
electron	0.0005	

(b) The diagram shows the position of some elements in the Periodic Table.

	Be															F	
														P			
																	Xe

Use the Periodic Table on page 2 to help you answer this question.

(i) How are elements arranged in the Periodic Table?

(1)

☒ **A** increasing atomic number

☒ **B** increasing melting point

☒ **C** increasing reactivity

☒ **D** increasing relative atomic mass

DO NOT WRITE IN THIS AREA
DO NOT WRITE IN THIS AREA
DO NOT WRITE IN THIS AREA

DO NOT WRITE IN THIS AREA
DO NOT WRITE IN THIS AREA
DO NOT WRITE IN THIS AREA

(ii) Which statement is correct about the position of phosphorus, P, in the Periodic Table?

(1)

☒ **A** Group 2 and Period 5

☒ **B** Group 3 and Period 5

☒ **C** Group 5 and Period 2

☒ **D** Group 5 and Period 3

(iii) Explain which of the four elements in the diagram is least reactive.

(2)

.....

.....

.....

.....

(Total for Question 1 = 6 marks)

2 The table gives some information about the halogens, fluorine, chlorine, bromine and iodine.

Halogen	Physical state at room temperature	Colour	Colour of dilute aqueous solution of halogen
fluorine	gas		colourless
chlorine	gas	green	colourless
bromine		red-brown	orange
iodine	solid	grey	brown

(a) Complete the table by giving the missing information.

(2)

(b) Describe a test to show that a colourless liquid is an alkene.

(2)

.....

.....

.....

.....

DO NOT WRITE IN THIS AREA
DO NOT WRITE IN THIS AREA
DO NOT WRITE IN THIS AREA

DO NOT WRITE IN THIS AREA
DO NOT WRITE IN THIS AREA
DO NOT WRITE IN THIS AREA

(c) A student is given an aqueous solution of chlorine and an aqueous solution of sodium iodide.

The student mixes the two solutions.

Explain the colour change that occurs.

(3)

.....

.....

.....

.....

.....

.....

.....

.....

(Total for Question 2 = 7 marks)

3 (a) The box gives the names of some metals.

aluminium	calcium	gold	magnesium	silver	zinc

Use words from the box to answer these questions.

(i) Identify the metal that burns with a bright white flame.

(1)

.....

(ii) Explain which metal is most likely to be found in the Earth as an uncombined element.

(2)

.....

.....

.....

.....

(b) Steel is an alloy of iron and carbon.

The diagram shows how the particles are arranged in steel.

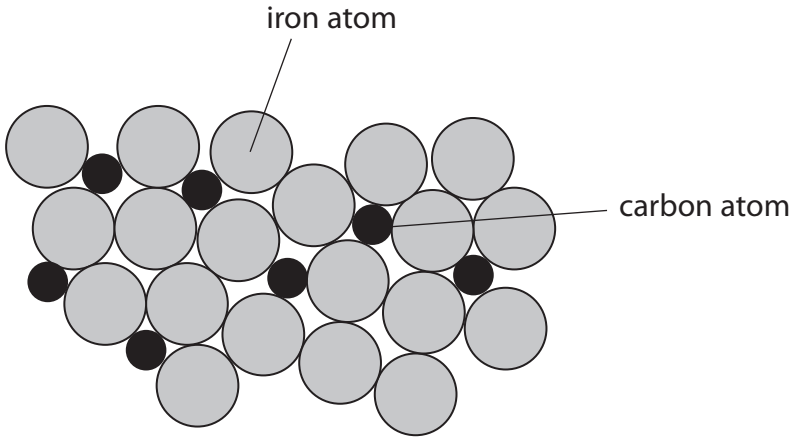

(i) State what is meant by the term **alloy**.

(1)

.....

.....

DO NOT WRITE IN THIS AREA
DO NOT WRITE IN THIS AREA
DO NOT WRITE IN THIS AREA

DO NOT WRITE IN THIS AREA
DO NOT WRITE IN THIS AREA
DO NOT WRITE IN THIS AREA

(ii) Explain why an alloy is less malleable than a pure metal.

(2)

.....

.....

.....

.....

.....

.....

(Total for Question 3 = 6 marks)

4 (a) The diagram shows a fractionating column used to separate crude oil into fractions.

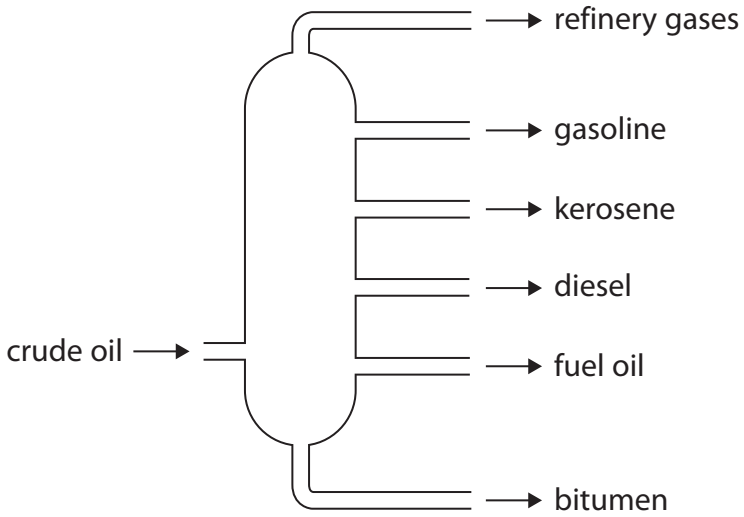

(i) Give one use for refinery gases and one use for bitumen.

(2)

refinery gases

.....

.....

bitumen

.....

.....

(ii) Give a reason why refinery gases rise to the top of the column.

(1)

.....

.....

(iii) State what must happen to the crude oil before it is pumped into the column.

(1)

.....

.....

DO NOT WRITE IN THIS AREA
DO NOT WRITE IN THIS AREA
DO NOT WRITE IN THIS AREA

DO NOT WRITE IN THIS AREA
DO NOT WRITE IN THIS AREA
DO NOT WRITE IN THIS AREA

(b) There is a low demand for some of the hydrocarbons obtained from crude oil.

Catalytic cracking can be used to convert low-demand hydrocarbons into more useful products.

(i) Give the conditions needed for cracking.

(2)

.....

.....

.....

.....

(ii) The cracking of tetradecane is shown in the equation.

$$C_{14}H_{30} \rightarrow 2C_3H_6 + C_8H_{18}$$

Explain why there is a high demand for both of the products.

(3)

.....

.....

.....

.....

.....

.....

.....

.....

(Total for Question 4 = 9 marks)

5 This question is about the insoluble salt, lead(II) bromide.

Lead(II) bromide can be made by a precipitation reaction.

This is the equation for the reaction.

$$Pb(NO_3)_2(aq) + 2KBr(aq) \rightarrow PbBr_2(s) + 2KNO_3(aq)$$

(a) Describe how solutions of lead nitrate and potassium bromide can be used to make a pure, dry sample of lead(II) bromide.

(4)

.....

.....

.....

.....

.....

.....

.....

.....

.....

.....

.....

.....

DO NOT WRITE IN THIS AREA
DO NOT WRITE IN THIS AREA
DO NOT WRITE IN THIS AREA

DO NOT WRITE IN THIS AREA
DO NOT WRITE IN THIS AREA
DO NOT WRITE IN THIS AREA

(b) A solution containing 0.150 mol of lead(II) nitrate is reacted with an excess of potassium bromide solution.

A mass of 49.6 g of pure, dry lead(II) bromide is produced.

Show, by calculation, that the percentage yield of lead(II) bromide is 90.1%.

[for $PbBr_2$, $M_r = 367$]

(2)

(c) A student investigates the change in electrical conductivity as dilute lead(II) nitrate solution is added to dilute potassium bromide solution.

This is the student's method.

Step 1 add 50 cm^3 of potassium bromide solution to a beaker

Step 2 measure the electrical conductivity of the solution

Step 3 add 10 cm^3 of lead(II) nitrate solution to the beaker

Step 4 stir the mixture

Step 5 measure the electrical conductivity of the mixture

Repeat steps 3, 4 and 5 until a total of 50 cm^3 of lead(II) nitrate solution has been added.

The table shows the student's results.

Total volume of lead(II) nitrate solution added in cm^3	Electrical conductivity in arbitrary units
0	10.00
10	9.80
20	9.77
30	9.40
40	9.20
50	9.00

(i) Plot the student's results on the grid.

(1)

(ii) Draw a line of best fit, ignoring the anomalous result.

(1)

DO NOT WRITE IN THIS AREA
DO NOT WRITE IN THIS AREA
DO NOT WRITE IN THIS AREA

DO NOT WRITE IN THIS AREA
DO NOT WRITE IN THIS AREA
DO NOT WRITE IN THIS AREA

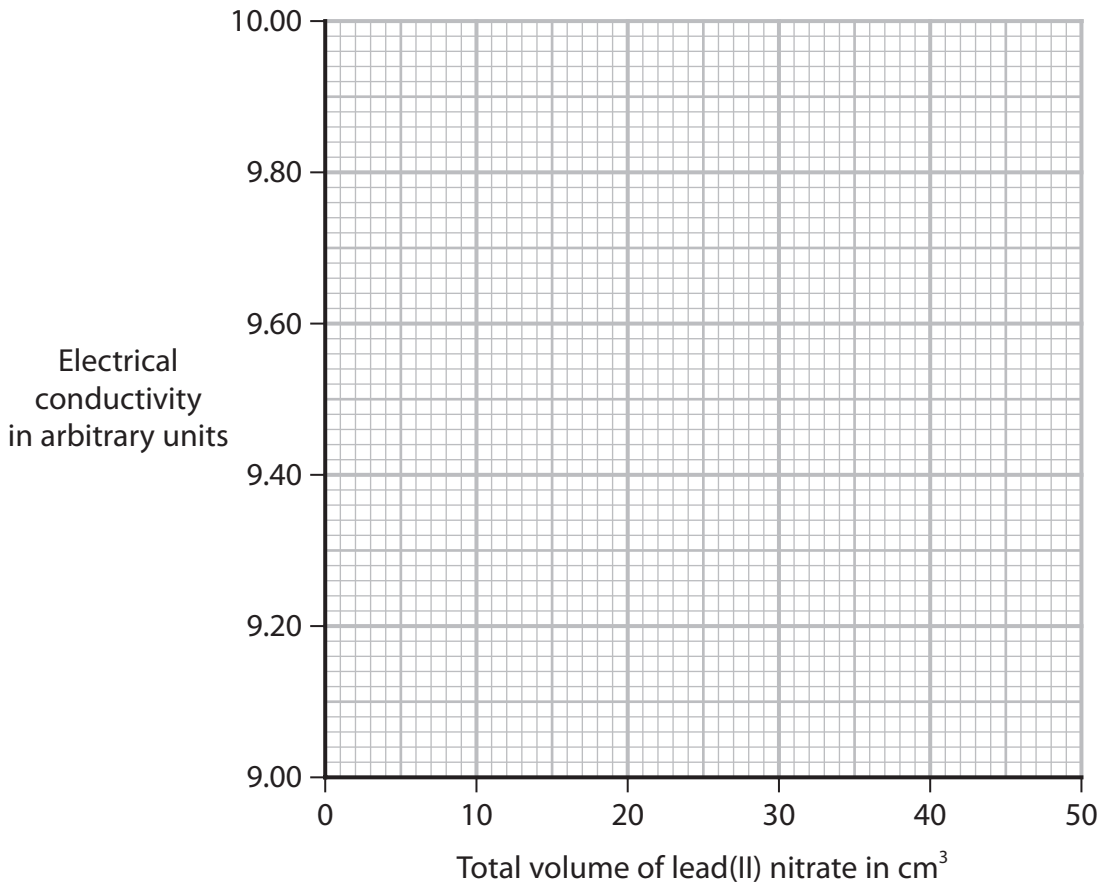

(iii) Explain the shape of the graph.

(2)

.....

.....

.....

.....

(iv) Suggest a mistake the student could have made to cause the anomalous result.

(1)

.....

.....

(v) Further 10 cm^3 volumes of lead(II) nitrate are added to the beaker so the lead(II) nitrate is in excess.

Predict what will happen to the conductivity of the mixture when the lead(II) nitrate is in excess.

(1)

.....

.....

(d) The diagram shows the electrolysis of molten lead(II) bromide, $PbBr_2$

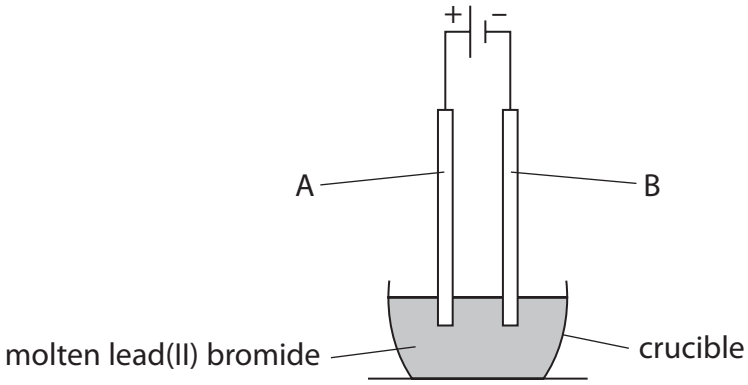

This is the ionic half-equation for the formation of bromine at electrode A.

$$2Br^- \rightarrow Br_2 + 2e^-$$

Give a reason why this half-equation shows oxidation.

(1)

.....

.....

(Total for Question 5 = 13 marks)

DO NOT WRITE IN THIS AREA
DO NOT WRITE IN THIS AREA
DO NOT WRITE IN THIS AREA

DO NOT WRITE IN THIS AREA
DO NOT WRITE IN THIS AREA
DO NOT WRITE IN THIS AREA

6 (a) Describe the forces of attraction in metallic bonding.

(2)

.....

.....

.....

.....

(b) When a small piece of potassium is added to water, bubbles of hydrogen gas are observed.

(i) Give the test for hydrogen gas.

(1)

.....

.....

(ii) Give two other observations that would be made.

(2)

1 .....

.....

2 .....

.....

(c) Explain why lithium is less reactive than potassium.

Refer to atomic structure in your answer.

(3)

.....

.....

.....

.....

.....

.....

(d) This is the equation for the reaction between sodium and water.

$$2Na(s) + 2H_2O(l) \rightarrow 2NaOH(aq) + H_2(g)$$

A mass of 0.750 g of sodium is reacted with an excess of water.

Calculate the volume of hydrogen gas produced, in cm^3, at room temperature.

[molar volume of hydrogen at rtp = 24 000 cm^3]

[for Na, A_r = 23]

Give your answer to three significant figures.

(4)

volume of hydrogen = ... cm^3

DO NOT WRITE IN THIS AREA
DO NOT WRITE IN THIS AREA
DO NOT WRITE IN THIS AREA

DO NOT WRITE IN THIS AREA
DO NOT WRITE IN THIS AREA
DO NOT WRITE IN THIS AREA

(e) This is the equation for the reaction between sodium hydroxide and sulfuric acid.

$$2NaOH + H_2SO_4 \rightarrow Na_2SO_4 + 2H_2O$$

A volume of 25.0 cm^3 of sodium hydroxide solution is completely neutralised by 16.3 cm^3 of 0.0500 mol / dm^3 sulfuric acid.

Calculate the concentration of the sodium hydroxide solution in mol / dm^3.

(3)

concentration = ... mol / dm^3

(Total for Question 6 = 15 marks)

7 Methanol is made by the reaction between hydrogen and carbon monoxide.

This is the equation for the reaction.

$$2H_2(g) + CO(g) \rightleftharpoons CH_3OH(g) \qquad \Delta H = -119\ kJ/mol$$

A mixture of hydrogen and carbon monoxide is left until dynamic equilibrium is reached.

(a) (i) Give two characteristics of a reaction at dynamic equilibrium.

(2)

1 .....

.....

2 .....

.....

(ii) Give a reason why adding a catalyst does **not** affect the yield of methanol.

(1)

.....

.....

.....

DO NOT WRITE IN THIS AREA
DO NOT WRITE IN THIS AREA
DO NOT WRITE IN THIS AREA

DO NOT WRITE IN THIS AREA
DO NOT WRITE IN THIS AREA
DO NOT WRITE IN THIS AREA

(iii) The temperature of the reaction mixture is decreased at constant pressure.

Explain the effect of this change on the yield of methanol.

(2)

.....

.....

.....

.....

(iv) The pressure of the reaction mixture is increased at constant temperature.

Explain the effect of this change on the yield of methanol.

(2)

.....

.....

.....

.....

(b) This equation shows the displayed formulae for the reactants and product.

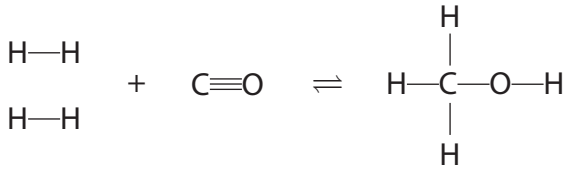

The table gives the bond energies for the bonds in the reactants and product.

Bond	Bond energy in kJ / mol
H—H	436
C≡O	1072
C—H	414
C—O	358
O—H	463

(i) Show that the molar enthalpy change, ΔH, for the reaction is –119 kJ / mol.

(3)

(ii) Explain why this reaction is exothermic.

(2)

.....

.....

.....

.....

DO NOT WRITE IN THIS AREA
DO NOT WRITE IN THIS AREA
DO NOT WRITE IN THIS AREA

DO NOT WRITE IN THIS AREA
DO NOT WRITE IN THIS AREA
DO NOT WRITE IN THIS AREA

(c) The diagram shows the displayed formula of an ester that is made from methanol and a carboxylic acid.

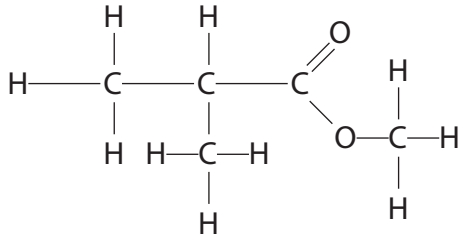

(i) Draw a circle around the functional group of the ester.

(1)

(ii) Give the displayed formula of the carboxylic acid used to make this ester.

(1)

(Total for Question 7 = 14 marks)

TOTAL FOR PAPER = 70 MARKS

BLANK PAGE

DO NOT WRITE IN THIS AREA
DO NOT WRITE IN THIS AREA
DO NOT WRITE IN THIS AREA