GradeMax

Cambridge International AS & A Level

Cambridge International Examinations
Cambridge International Advanced Subsidiary and Advanced Level

CANDIDATE NAME

CENTRE NUMBER

CANDIDATE NUMBER

8656660162

CHEMISTRY **9701/52**

Paper 5 Planning, Analysis and Evaluation **February/March 2016**

1 hour 15 minutes

Candidates answer on the Question Paper.

No Additional Materials are required.

READ THESE INSTRUCTIONS FIRST

Write your Centre number, candidate number and name on all the work you hand in.
Write in dark blue or black pen.
You may use an HB pencil for any diagrams or graphs.
Do not use staples, paper clips, glue or correction fluid.
DO **NOT** WRITE IN ANY BARCODES.

Answer **all** questions.
Electronic calculators may be used.
You may lose marks if you do not show your working or if you do not use appropriate units.
Use of a Data Booklet is unnecessary.

At the end of the examination, fasten all your work securely together.
The number of marks is given in brackets [ ] at the end of each question or part question.

This document consists of **8** printed pages.

© UCLES 2016

CAMBRIDGE International Examinations

GradeMax

1 Propanone, CH_3COCH_3, is an organic liquid which is soluble in water.

Aqueous propanone reacts with aqueous iodine. The reaction is catalysed by $H^+(aq)$ ions.

$$CH_3COCH_3(aq) + I_2(aq) \rightarrow CH_3COCH_2I(aq) + HI(aq)$$

The order of reaction with respect to iodine can be determined experimentally.

An experiment is carried out using the following solutions.

- solution **A**, 25.0 cm^3 of 1.00 mol dm^{-3} $CH_3COCH_3(aq)$
- solution **B**, 25.0 cm^3 of 1.00 mol dm^{-3} $H_2SO_4(aq)$
- solution **C**, 50.0 cm^3 of 0.200 mol dm^{-3} $I_2(aq)$

The solutions are mixed to start the reaction. At certain time intervals, a 10.0 cm^3 portion of the mixture is withdrawn and transferred to a conical flask containing excess sodium hydrogencarbonate, $NaHCO_3(aq)$. This prevents any further significant reaction taking place by removing the $H^+(aq)$ ions. The concentration of unreacted $I_2(aq)$ in each 10.0 cm^3 portion of the mixture can then be determined by titration with aqueous thiosulfate ions, $S_2O_3^{2-}(aq)$.

(a) State the size and type of apparatus needed to prepare a suitable volume of a standard solution of 1.00 mol dm^{-3} $CH_3COCH_3(aq)$ from liquid propanone.

Calculate the mass of propanone needed to prepare this standard solution.
[A_r: C, 12.0; H, 1.0; O, 16.0]

apparatus .....

mass of propanone ..... g
[3]

© UCLES 2016

GradeMax

(b) Solutions **A**, **B** and **C** need to be added in a specific order and the clock started as the third solution is added.

(i) Suggest the best order of adding the solutions.

1 .....

2 .....

3 .....

[1]

(ii) Explain your choice.

.....

..... [1]

(c) Each 10.0 cm^3 portion of mixture removed from the main reaction is added to a separate solution of sodium hydrogencarbonate, $NaHCO_3(aq)$, in a conical flask to remove $H^+(aq)$ ions.

(i) Which piece of apparatus should be used to transfer each 10.0 cm^3 portion of mixture to the conical flask?

..... [1]

(ii) Suggest **two** reasons why $NaHCO_3(aq)$ is preferred to NaOH(aq) as the reagent used to remove $H^+(aq)$ ions.

reason 1 .....

.....

reason 2 .....

.....

[2]

© UCLES 2016

[Turn over

(d) The unreacted iodine in each 10.0 cm^3 portion of the mixture is titrated against 0.100 mol dm^{-3} aqueous thiosulfate ions, $S_2O_3^{2-}(aq)$, to determine the concentration of $I_2(aq)$ in the mixture at the time that the 10.0 cm^3 portion was withdrawn.

$$I_2(aq) + 2S_2O_3^{2-}(aq) \rightarrow 2I^-(aq) + S_4O_6^{2-}(aq)$$

(i) A 10.0 cm^3 portion of mixture is removed at time = 0. This is before any of the 0.200 mol dm^{-3} $I_2(aq)$ had reacted.

Calculate the volume of 0.100 mol dm^{-3} $S_2O_3^{2-}(aq)$ needed to react with the iodine present in this 10.0 cm^3 portion of mixture.

volume 0.100 mol dm^{-3} $S_2O_3^{2-}(aq)$ = ... cm^3 [3]

(ii) Suggest the name of a suitable indicator to use in the titration and state its colour change.

indicator .....

colour change .....

[2]

(e) State **two** variables which must be recorded in this experiment.

For each variable, state the units.

variable 1 ..... units .....

variable 2 ..... units .....

[2]

(f) State **one** other variable which must be controlled in this experiment.

..... [1]

© UCLES 2016

GradeMax

(g) The order of reaction with respect to iodine is expected to be first order.

(i) Use the axes below to draw a sketch graph of how the concentration of iodine changes during the experiment. Label both axes.

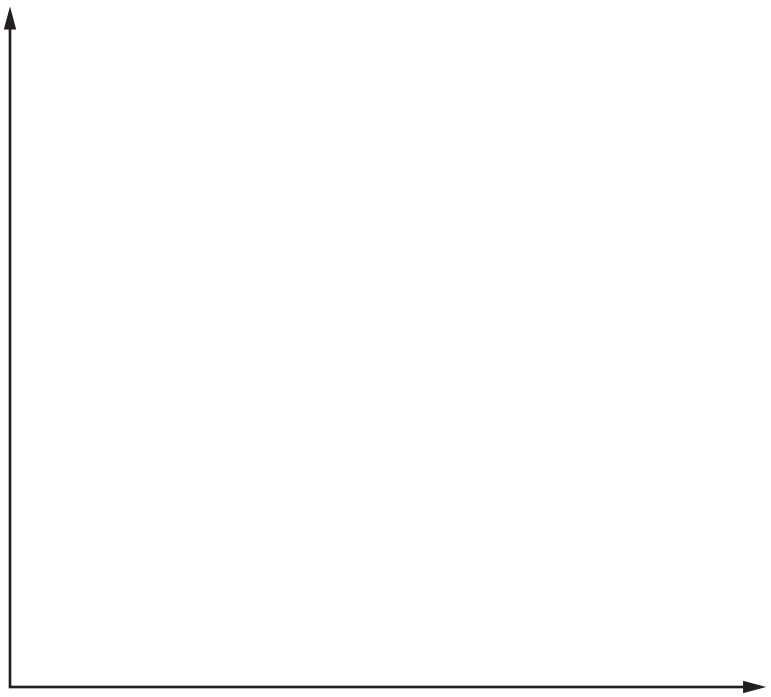

[2]

(ii) How could the graph be used to prove that the order of reaction with respect to iodine is first order?

.....

.....

..... [1]

(h) A student suggested that the temperature at which the experiment was carried out would affect the order of reaction with respect to iodine.

State if the student was correct and explain your answer.

.....

..... [1]

[Total: 20]

© UCLES 2016

2 A student carried out a series of experiments to determine the enthalpy change of combustion of ethanol, C_2H_5OH.

A diagram of the apparatus is shown below.

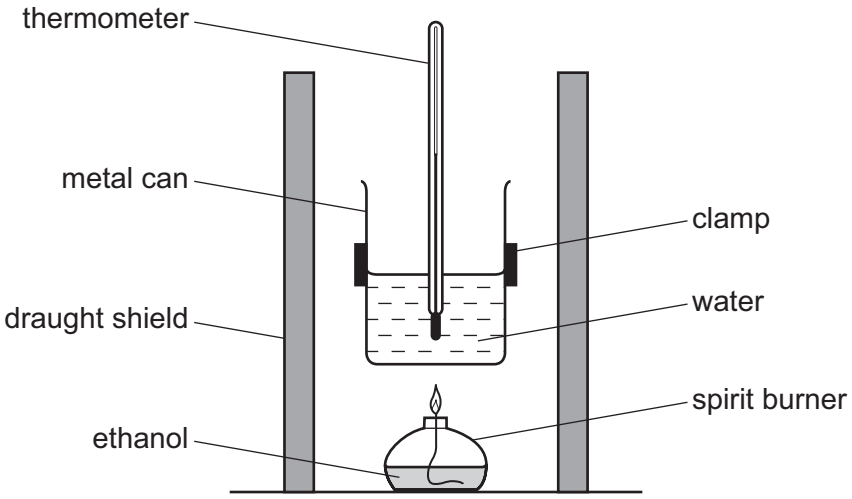

The ethanol in the spirit burner was burned to heat a measured mass of water in the metal can. The student recorded the initial and final mass of ethanol and the initial and final temperature of the water for each experiment.

(a) Process the results in the table to calculate the amount of ethanol burned and the energy transferred to the water in each experiment.

Record all answers to **three** significant figures.
[Specific heat capacity of water, $c = 4.18\,J\,g^{-1}\,K^{-1}$]
[A_r: C, 12.0; H, 1.0; O, 16.0]

experiment number	mass of ethanol burned / g	temperature change / °C	mass of water heated / g	amount of ethanol burned / mol	energy transferred to the water / kJ
1	0.391	19.5	40.0		
2	0.488	23.6	40.0		
3	0.506	24.5	40.0		
4	0.559	26.9	40.0		
5	0.727	33.6	40.0		
6	0.597	31.1	40.0		
7	0.410	20.3	40.0		
8	0.681	31.7	40.0		

[2]

© UCLES 2016

(b) Plot a graph on the grid below to show how the energy transferred to the water varies with the amount of ethanol burned. Draw the line of best fit.

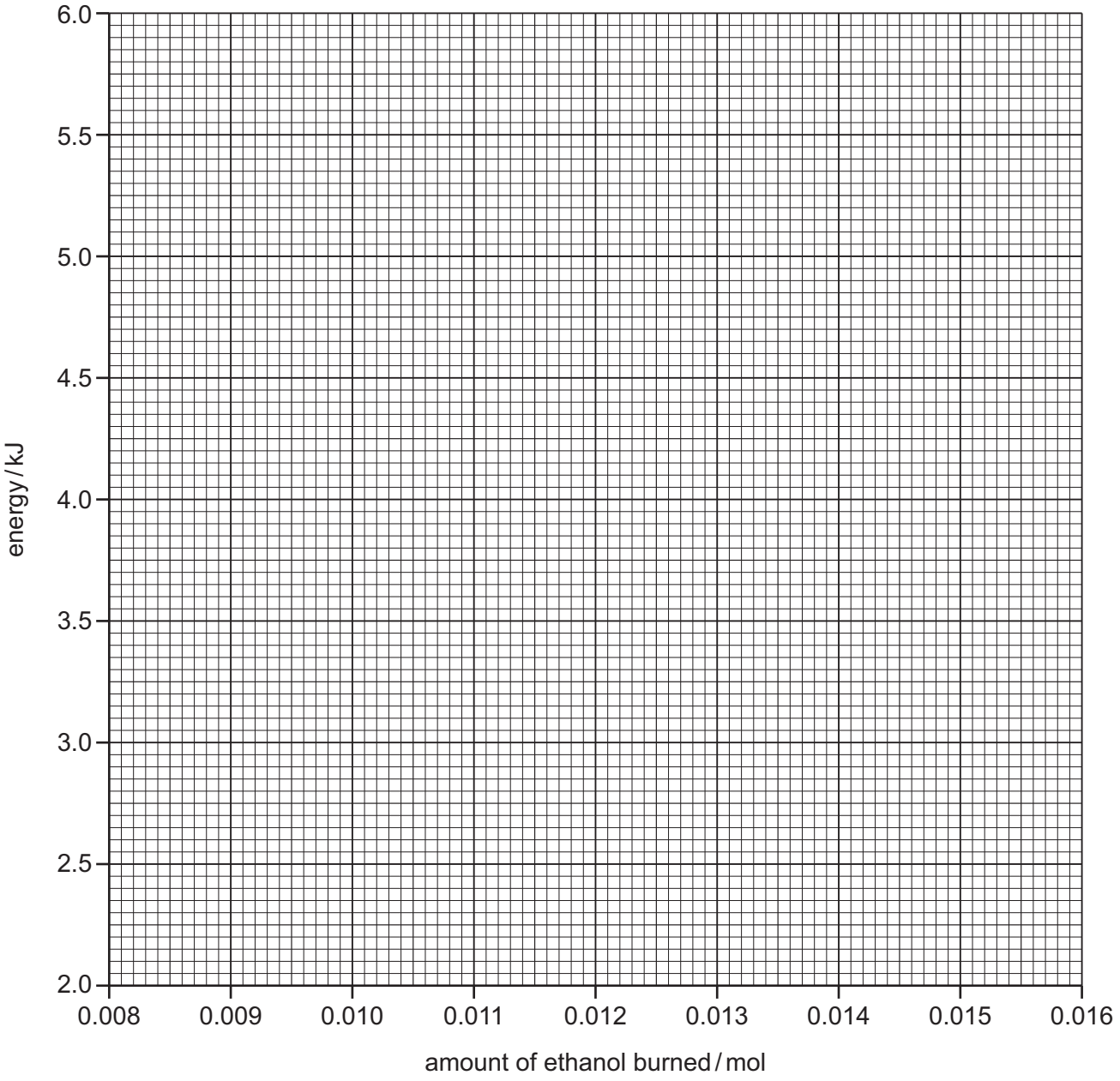

[2]

(c) Write the number of the experiment which gave the result which was most anomalous.

..... [1]

© UCLES 2016

(d) The gradient of the graph gives the magnitude of the enthalpy change of combustion of ethanol.

Determine the gradient of your graph. State the co-ordinates of the **two** points you used for your calculation. Record the value of the gradient to **three** significant figures.

co-ordinates of two points used ....

gradient = ... $kJ\,mol^{-1}$

[2]

(e) Under the same conditions of temperature and pressure as these experiments, the accepted value for the enthalpy change of combustion of ethanol is $-1370\,kJ\,mol^{-1}$.

Explain why this value is a negative number.

..... [1]

(f) **(i)** Calculate the maximum percentage error in the measurement of each mass used in experiment 1.

mass measured	maximum error in a single reading	maximum percentage error / %
0.391 g of ethanol burned	0.0005 g	
40.0 g of water	0.05 g	

[1]

(ii) Another student repeated the experiments using the method described under the same conditions. The value obtained for the enthalpy change of combustion of ethanol was $-612\,kJ\,mol^{-1}$.

Suggest a reason why the errors calculated in **(i)** do not fully account for the difference between the student's value and the accepted value for enthalpy change of combustion, $-1370\,kJ\,mol^{-1}$.

.....

..... [1]

[Total: 10]

Permission to reproduce items where third-party owned material protected by copyright is included has been sought and cleared where possible. Every reasonable effort has been made by the publisher (UCLES) to trace copyright holders, but if any items requiring clearance have unwittingly been included, the publisher will be pleased to make amends at the earliest possible opportunity.

To avoid the issue of disclosure of answer-related information to candidates, all copyright acknowledgements are reproduced online in the Cambridge International Examinations Copyright Acknowledgements Booklet. This is produced for each series of examinations and is freely available to download at www.cie.org.uk after the live examination series.

Cambridge International Examinations is part of the Cambridge Assessment Group. Cambridge Assessment is the brand name of University of Cambridge Local Examinations Syndicate (UCLES), which is itself a department of the University of Cambridge.