GradeMax

Cambridge International AS & A Level

Cambridge International Examinations
Cambridge International Advanced Subsidiary and Advanced Level

CANDIDATE NAME

CENTRE NUMBER

CANDIDATE NUMBER

5631211079

CHEMISTRY **9701/52**

Paper 5 Planning, Analysis and Evaluation **February/March 2018**

1 hour 15 minutes

Candidates answer on the Question Paper.

No Additional Materials are required.

READ THESE INSTRUCTIONS FIRST

Write your Centre number, candidate number and name on all the work you hand in.
Write in dark blue or black pen.
You may use an HB pencil for any diagrams or graphs.
Do not use staples, paper clips, glue or correction fluid.
DO **NOT** WRITE IN ANY BARCODES.

Answer **all** questions.
Electronic calculators may be used.
You may lose marks if you do not show your working or if you do not use appropriate units.
Use of a Data Booklet is unnecessary.

At the end of the examination, fasten all your work securely together.
The number of marks is given in brackets [ ] at the end of each question or part question.

This document consists of **12** printed pages.

© UCLES 2018

CAMBRIDGE International Examinations

GradeMax

1 When a solute is added to a solvent the freezing point of the solution is lower than that of the pure solvent.

The lowering of freezing point is very small. A chemist called Beckmann invented a thermometer capable of measuring these small temperature changes accurately. The Beckmann thermometer must be calibrated at the start of the experiment.

An incomplete diagram of the Beckmann apparatus is shown containing pure liquid cyclohexane, an organic solvent with a freezing point of about 6.5 °C. The diagram does not show how the cyclohexane could be frozen.

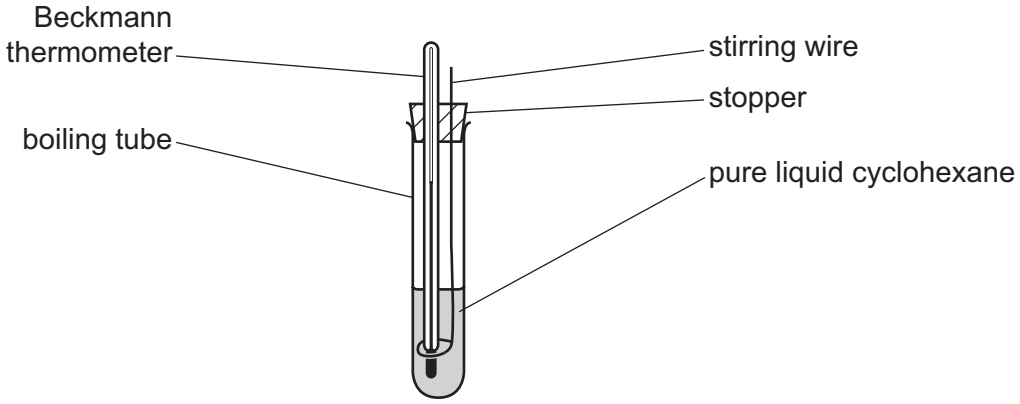

(a) Complete the diagram to show how the pure liquid cyclohexane could be frozen using simple laboratory apparatus. [1]

(b) The method for determining the lowering of freezing point is as follows.

step 1 Add 20.00 g of pure liquid cyclohexane to a clean dry boiling tube.

step 2 Place the stopper containing the Beckmann thermometer and stirring wire into the boiling tube.

step 3 Cool the pure cyclohexane. When it starts to freeze, set the Beckmann thermometer to 0.00 to calibrate it.

step 4 Allow the pure cyclohexane to melt. Remove the stopper from the boiling tube. Add 0.250 g of an organic solid **X** to the pure cyclohexane and replace the stopper. Stir the solution to dissolve **X** and refreeze the solution. Record the new freezing point.

step 5 Allow the solution to melt. Remove the stopper from the boiling tube. Add a further known mass of **X** to the solution and replace the stopper. Stir the solution to dissolve **X** and refreeze the solution. Record the new freezing point.

step 6 Repeat **step 5** until sufficient readings are obtained.

© UCLES 2018

GradeMax

(i) In **step 1**, the cyclohexane can be measured using an electronic balance, a beaker and a clean dry boiling tube as shown.

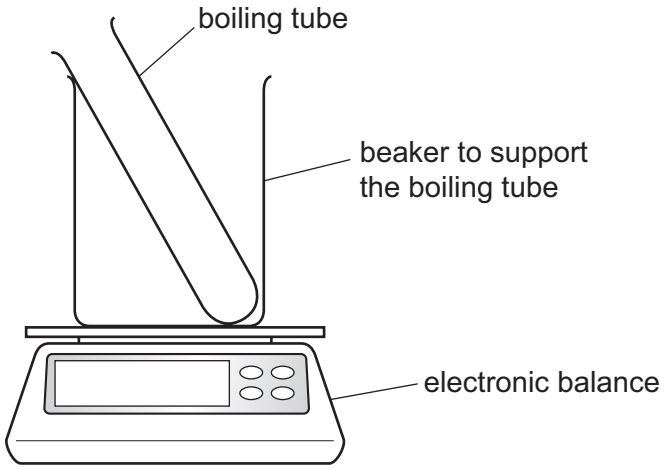

Describe a suitable method to add **precisely** 20.00 g of cyclohexane to the boiling tube. Assume that the balance is accurate to two decimal places and that common laboratory apparatus is available.

.....

..... [1]

(ii) Alternatively in **step 1**, the volume of cyclohexane with a mass of exactly 20.00 g can be measured and added to the boiling tube.

Calculate the volume of cyclohexane with a mass of precisely 20.00 g.
The density of cyclohexane is 0.78 g cm^{-3}.
Give your answer to **two** decimal places.

volume of cyclohexane ..... cm^3

Explain whether a burette is suitable for measuring this volume.

.....

.....

.....
[2]

© UCLES 2018

[Turn over

GradeMax

(iii) In **step 4** the mass of **X** is measured on an electronic balance accurate to three decimal places before adding it to the cyclohexane.

A student suggests the following technique.

- An empty container is placed on the electronic balance.
- The mass of the empty container is recorded to three decimal places.
- 0.250 g of **X** is added to the container.
- **X** is tipped from the container into the cyclohexane.

Explain why this technique would **not** be accurate for adding 0.250 g of **X** to the cyclohexane.

.....

.....

..... [1]

© UCLES 2018

GradeMax

Question 1 continues on the next page.

(c) The freezing points of the solutions are lower than the freezing point of pure cyclohexane.

ΔT_{fp} = (freezing point of pure cyclohexane) – (freezing point of the solution)

For the experiment described in **(b)** the values of ΔT_{fp} are recorded in the table.

(i) A ratio, B, is calculated as follows.

$$B = \frac{\text{mass of } \mathbf{X} \text{ (g)}}{\text{mass of solvent (g)}}$$

Complete the table by calculating B for each reading. Give your answers to **three** significant figures.

reading number	total mass of **X** added to 20.00 g of cyclohexane / g	B	ΔT_{fp} / °C
1	0.250		1.35
2	0.400		2.20
3	0.500		2.75
4	0.800		4.40
5	0.950		5.30
6	1.150		6.40
7	1.300		7.25
8	1.400		8.50

[2]

© UCLES 2018

(ii) Plot a graph on the grid to show the relationship between B and ΔT_{fp}. Draw the line of best fit.

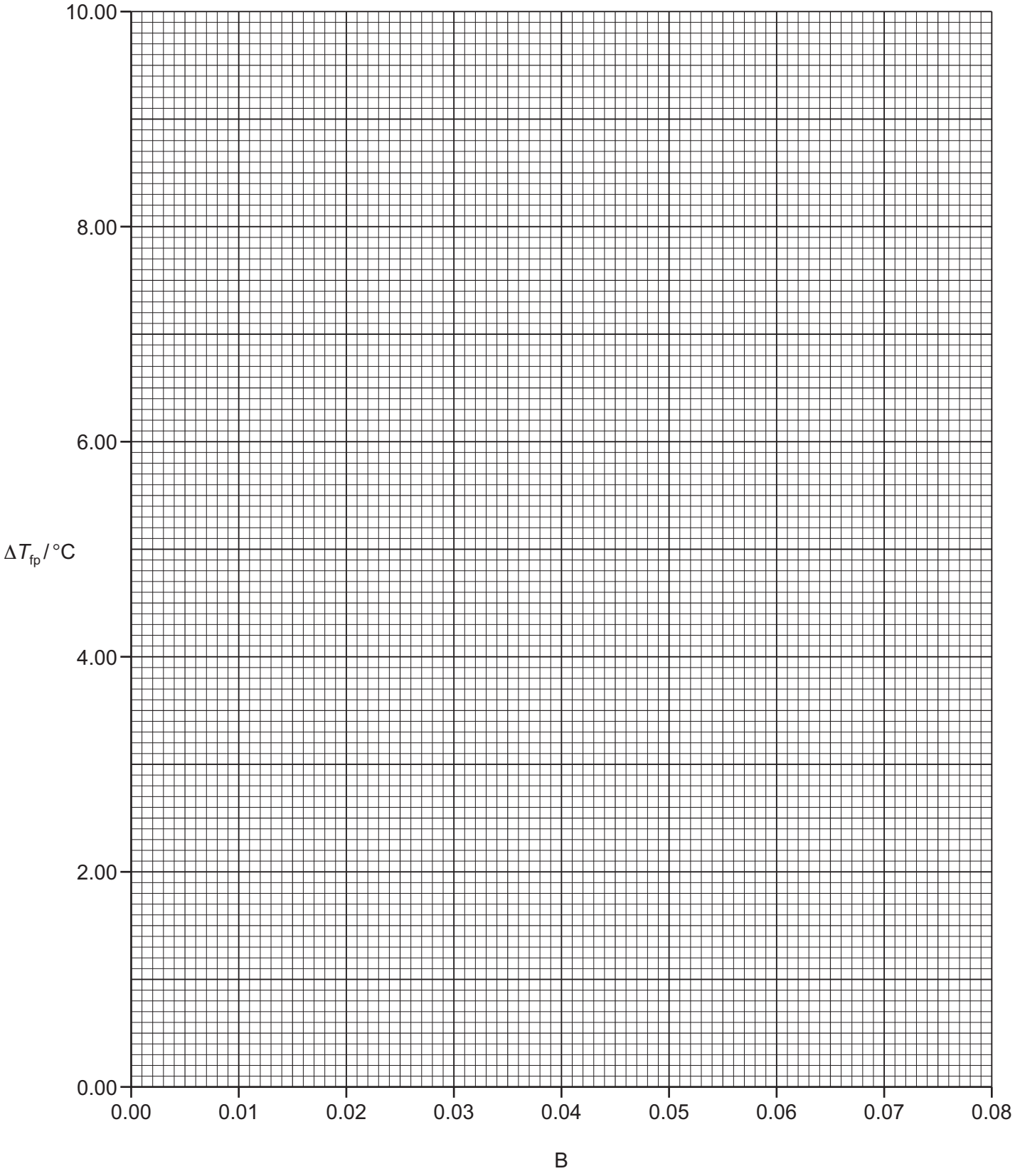

[2]

GradeMax

(iii) Identify, by the reading number, the single most anomalous point. Suggest what error in the experiment could have caused this anomaly.

reading number .....

reason .....

.....

[1]

(iv) In another experiment, a student added an unknown mass of **X** to 20.00 g of cyclohexane and measured ΔT_{fp} as 5.00 °C.

Use your graph to determine the mass of **X** used in this experiment.

mass of **X** = ... g [2]

(v) Determine the gradient of your line of best fit. State the coordinates of the **two** points you used for your calculation.

coordinates 1 ..... coordinates 2 .....

gradient = ... °C [2]

© UCLES 2018

(d) ΔT_{fp} is related to the M_r of **X** by the following expression

$$\Delta T_{fp} = \frac{K\mathrm{B}}{M_r}$$

where

$$\mathrm{B} = \frac{\text{mass of } \mathbf{X} \text{ (g)}}{\text{mass of solvent (g)}}$$

K = a constant

The M_r of **X** can be found using the gradient of your line of best fit.

$$M_r = \frac{K}{\text{gradient}}$$

The numerical value of K is 20 020.

Use this value for K and the gradient you determined in **(c)(v)** to calculate the M_r of **X**. Give your answer to the nearest whole number.

If you were unable to calculate the gradient in **(c)(v)**, assume that the gradient is 103 °C. This is **not** the correct value.

M_r = ... [1]

(e) A student used the Beckmann apparatus and repeated the experiment described in **(b)** with an unknown solid **Y**. The student found the M_r of **Y** to be 136.

Y is an aromatic carboxylic acid.

Suggest the structure of **Y**.
[A_r: C, 12.0; O, 16.0; H, 1.0]

[1]

[Total: 16]

GradeMax

2 'Lawn sand' is spread over the grass in gardens to reduce the growth of moss. Lawn sand is a mixture of sand and iron(II) sulfate crystals, $FeSO_4.7H_2O$.

Lawn sand usually contains 6 – 10% $FeSO_4.7H_2O$ by mass.

To determine the exact percentage by mass of $FeSO_4.7H_2O$ present in a sample of lawn sand, a student devises the following experiment.

step 1 Use a known mass of lawn sand to prepare 250.0 cm^3 of solution **A** containing $Fe^{2+}(aq)$ ions. Solution **A** must have dilute sulfuric acid, $H_2SO_4(aq)$, added to it **before** it is made up to 250 cm^3.

step 2 To determine the concentration of $Fe^{2+}(aq)$ in solution **A**, titrate a 25.00 cm^3 sample of solution **A** against 0.0200 mol dm^{-3} aqueous potassium manganate(VII), $KMnO_4(aq)$.

The reaction which takes place during the titration is shown.

$$MnO_4^-(aq) + 8H^+(aq) + 5Fe^{2+}(aq) \rightarrow Mn^{2+}(aq) + 4H_2O(l) + 5Fe^{3+}(aq)$$

(a) (i) The end-point of the titration is 25.00 cm^3 of 0.0200 mol dm^{-3} $KMnO_4(aq)$.

Determine the concentration of $Fe^{2+}(aq)$ that was present in the 25.00 cm^3 sample of solution **A** at the start of the titration.

concentration of $Fe^{2+}(aq)$ = ... mol dm^{-3} [1]

© UCLES 2018

If you were unable to calculate the concentration in **(i)**, assume for **(ii)** and **(iii)** that the concentration of $Fe^{2+}(aq)$ is 0.300 mol dm^{-3}. This is **not** the correct answer.

(ii) Determine the mass of lawn sand needed to prepare the 250.0 cm^3 of solution **A** at the concentration calculated in **(i)**.

Assume that lawn sand contains 8% $FeSO_4.7H_2O$ by mass.
[A_r: Fe, 55.8; S, 32.1; O, 16.0; H, 1.0]

mass of lawn sand = ... g [3]

(iii) Solution **A** must contain enough $H^+(aq)$ ions for the reaction to take place during the titration.

$$MnO_4^-(aq) + 8H^+(aq) + 5Fe^{2+}(aq) \rightarrow Mn^{2+}(aq) + 4H_2O(l) + 5Fe^{3+}(aq)$$

Use the concentration of $Fe^{2+}(aq)$ from **(i)** to determine the minimum volume of 2.00 mol dm^{-3} $H_2SO_4(aq)$ which must be added to prepare the 250.0 cm^3 of solution **A**.

volume = ... cm^3 [2]

© UCLES 2018

GradeMax

(b) Describe a method to prepare 250.0 cm^3 of solution **A** starting with a glass beaker which contains the known mass of lawn sand determined in **(a)(ii)** as shown.

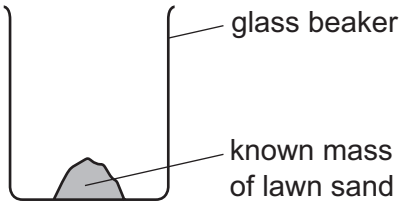

Assume that common laboratory apparatus is available.
You may find it helpful to write your answer as a series of smaller steps.

.....

.....

.....

.....

.....

.....

.....

.....

..... [5]

(c) State the colour change in the conical flask at the end-point of the titration.

from ..... to .....
[1]

(d) Aqueous potassium manganate(VII) is a powerful oxidising agent.

Suggest the effect, if any, on the end-point volume if the student acidified the mixture with dilute hydrochloric acid, HC*l*(aq), instead of dilute sulfuric acid, H_2SO_4(aq). Explain your answer.

effect, if any, on the end-point volume .....

explanation .....

.....

.....
[2]

[Total : 14]

Permission to reproduce items where third-party owned material protected by copyright is included has been sought and cleared where possible. Every reasonable effort has been made by the publisher (UCLES) to trace copyright holders, but if any items requiring clearance have unwittingly been included, the publisher will be pleased to make amends at the earliest possible opportunity.

To avoid the issue of disclosure of answer-related information to candidates, all copyright acknowledgements are reproduced online in the Cambridge International Examinations Copyright Acknowledgements Booklet. This is produced for each series of examinations and is freely available to download at www.cie.org.uk after the live examination series.

Cambridge International Examinations is part of the Cambridge Assessment Group. Cambridge Assessment is the brand name of University of Cambridge Local Examinations Syndicate (UCLES), which is itself a department of the University of Cambridge.