GradeMax

* 0000800000001 * DFD

CAMBRIDGE
International Education

Cambridge International AS & A Level

CANDIDATE NAME

CENTRE NUMBER

CANDIDATE NUMBER

2018519440

CHEMISTRY **9701/54**

Paper 5 Planning, Analysis and Evaluation **May/June 2026**

1 hour 15 minutes

You must answer on the question paper.

No additional materials are needed.

INSTRUCTIONS

- Answer **all** questions.
- Use a black or dark blue pen. You may use an HB pencil for any diagrams or graphs.
- Write your name, centre number and candidate number in the boxes at the top of the page.
- Write your answer to each question in the space provided.
- Do **not** use an erasable pen. Do **not** use correction fluid or tape.
- Do **not** write on any bar codes.
- You may use a calculator.
- You should show all your working and use appropriate units.

INFORMATION

- The total mark for this paper is 30.
- The number of marks for each question or part question is shown in brackets [ ].
- The Periodic Table is printed in the question paper.
- Important values, constants and standards are printed in the question paper.

This document has **12** pages.

DC (WW/TC) 364862/7
© Cambridge University Press & Assessment 2026

[Turn over

GradeMax

1 A student uses two different methods to determine the value of integer ***x*** in hydrated sodium carbonate crystals, $Na_2CO_3 \cdot xH_2O(s)$.

Method 1

The student uses the following procedure.

step 1 Weigh an empty crucible.

step 2 Add approximately 5 g of $Na_2CO_3 \cdot xH_2O(s)$ to the crucible.

step 3 Weigh the crucible and contents.

step 4 Heat the crucible and contents for 5 minutes.

step 5 Allow the crucible to cool. Weigh the crucible and residue.

(a) Suggest what the student should do to ensure all the water is removed from the hydrated salt.

..... [1]

(b) The student's results are shown in Table 1.1.

Table 1.1

	mass / g
mass of empty crucible	17.68
mass of crucible + contents	22.57
mass of $Na_2CO_3 \cdot xH_2O(s)$ added	
mass of crucible + residue	19.74
mass of residue	

(i) Complete Table 1.1. Hence, calculate the mass, in g, of water lost.

mass of water lost = ... g
[1]

(ii) Using the same apparatus, suggest a modification that the student could make to the method to reduce the percentage error in the measurement of the mass of water lost.

.....

..... [1]

© Cambridge University Press & Assessment 2026

DO NOT WRITE IN THIS MARGIN
DO NOT WRITE IN THIS MARGIN
DO NOT WRITE IN THIS MARGIN
DO NOT WRITE IN THIS MARGIN
DO NOT WRITE IN THIS MARGIN

GradeMax

(c) Use the student's results for Method 1 to calculate the value of ***x*** in $Na_2CO_3 \cdot xH_2O(s)$.

Show your working. Give your answer to the nearest whole number.

x = ... [2]

(d) Method 2

The student uses the following procedure.

step 1 Prepare 250.0 cm^3 of solution **A** containing 0.365 g of $Na_2CO_3 \cdot xH_2O(s)$.

step 2 Fill a burette with 0.0100 mol dm^{-3} hydrochloric acid, $HCl(aq)$.

step 3 Use a pipette to transfer 25.0 cm^3 of solution **A** to a conical flask.

step 4 Titrate the contents of the conical flask against 0.0100 mol dm^{-3} $HCl(aq)$ using methyl orange indicator.

Repeat steps 3 and 4 as many times as necessary.

The equation for the reaction is shown.

$$Na_2CO_3(aq) + 2HCl(aq) \rightarrow 2NaCl(aq) + H_2O(l) + CO_2(g)$$

(i) Describe how the student should make 250.0 cm^3 of solution **A**, starting from 0.365 g of $Na_2CO_3 \cdot xH_2O(s)$ in a 50 cm^3 beaker.

Give the name and capacity of any apparatus used.

Write your answer using a series of numbered steps.

.....

.....

.....

.....

.....

.....

..... [3]

(ii) Identify the substance that should be used to rinse the burette before carrying out step 2 in Method 2.

..... [1]

© Cambridge University Press & Assessment 2026

DO NOT WRITE IN THIS MARGIN
DO NOT WRITE IN THIS MARGIN
DO NOT WRITE IN THIS MARGIN
DO NOT WRITE IN THIS MARGIN
DO NOT WRITE IN THIS MARGIN

(e) The student's titration results are shown in Table 1.2.

Table 1.2

	rough titration	titration 1	titration 2	titration 3
final burette reading / cm^3	25.50	25.25	30.45	25.40
initial burette reading / cm^3	0.10	0.00	5.45	0.25
titre / cm^3	25.40	25.25	25.00	25.15

(i) The student calculates the mean titre as 25.20 cm^3.

Explain why this is a suitable value for the mean titre.

.....

..... [1]

(ii) Use the mean titre value of 25.20 cm^3 to calculate the value of ***x*** in hydrated sodium carbonate, $Na_2CO_3 \bullet xH_2O(s)$.

Show your working. Give your answer to the nearest whole number.

x = ... [4]

(iii) Calculate the percentage error in the titre for titration 3.

Show your working.

percentage error = ...% [1]

© Cambridge University Press & Assessment 2026

GradeMax

DO NOT WRITE IN THIS MARGIN

DO NOT WRITE IN THIS MARGIN

DO NOT WRITE IN THIS MARGIN

DO NOT WRITE IN THIS MARGIN

DO NOT WRITE IN THIS MARGIN

PapaCambridge papacambridge.com

GradeMax

(f) Another student consistently performed step 3 in Method 2 incorrectly. Figure 1.1 shows the level of solution **A** in the pipette during each transfer to the conical flask.

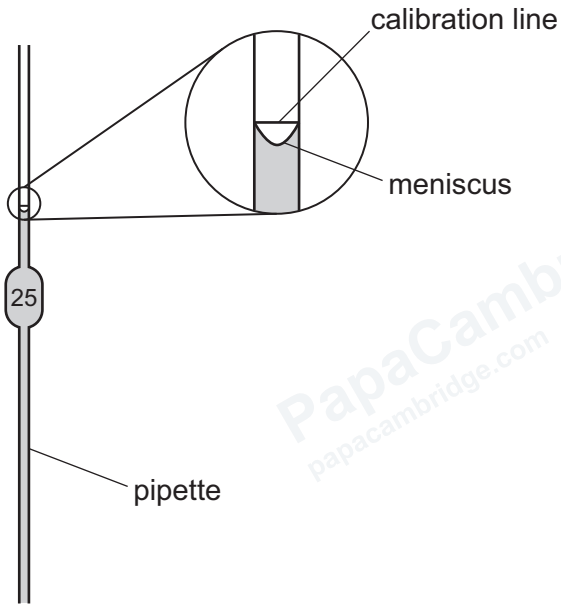

Figure 1.1

Suggest the effect this has on the value of ***x*** determined by the student.

Explain your answer.

effect on value of ***x*** .....

explanation .....

.....

[1]

[Total: 16]

DO NOT WRITE IN THIS MARGIN
DO NOT WRITE IN THIS MARGIN
DO NOT WRITE IN THIS MARGIN
DO NOT WRITE IN THIS MARGIN
DO NOT WRITE IN THIS MARGIN

2 A student makes ammonia gas, $NH_3(g)$, in the laboratory by heating a mixture of solid ammonium chloride, $NH_4Cl(s)$, and solid calcium hydroxide, $Ca(OH)_2(s)$.

$$2NH_4Cl(s) + Ca(OH)_2(s) \rightarrow CaCl_2(s) + 2NH_3(g) + 2H_2O(l)$$

The student uses the apparatus shown in Figure 2.1 to collect a sample of $NH_3(g)$.

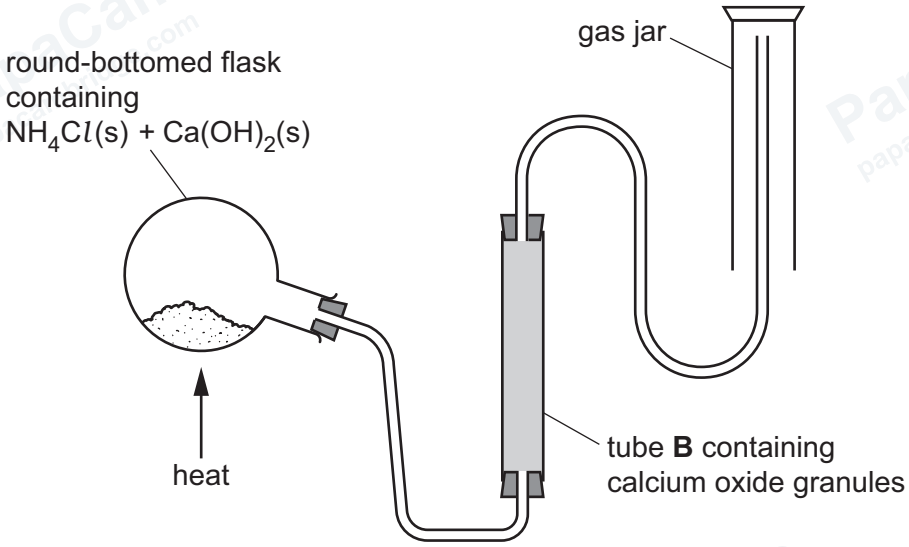

Figure 2.1

(a) (i) The student uses 5.00 g of $NH_4Cl(s)$. Calculate the minimum mass, in g, of $Ca(OH)_2(s)$ that should be added to the round-bottomed flask to react fully with 5.00 g of $NH_4Cl(s)$.

Give your answer to **three** significant figures.

mass of $Ca(OH)_2(s)$ = ... g [1]

(ii) Suggest why the student carries out this experiment in a fume hood.

..... [1]

DO NOT WRITE IN THIS MARGIN
DO NOT WRITE IN THIS MARGIN
DO NOT WRITE IN THIS MARGIN
DO NOT WRITE IN THIS MARGIN
DO NOT WRITE IN THIS MARGIN

© Cambridge University Press & Assessment 2026

GradeMax

(iii) Tube **B** contains calcium oxide granules.

Suggest why $NH_3(g)$ is passed through tube **B** before collection.

..... [1]

(iv) $NH_3(g)$ is collected in an inverted gas jar as shown in Figure 2.1.

Suggest why it is possible to collect $NH_3(g)$ in this way.

..... [1]

(b) Figure 2.2 shows an alternative method of collecting a gas.

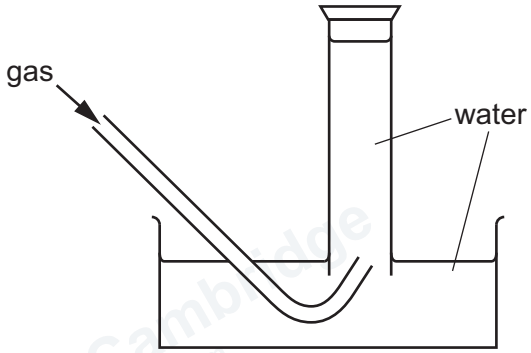

Figure 2.2

Suggest why the apparatus shown in Figure 2.2 is **not** suitable to collect the $NH_3(g)$ produced.

..... [1]

DO NOT WRITE IN THIS MARGIN
DO NOT WRITE IN THIS MARGIN
DO NOT WRITE IN THIS MARGIN
DO NOT WRITE IN THIS MARGIN
DO NOT WRITE IN THIS MARGIN

(c) The student investigates the decomposition of $NH_3(g)$ in the presence of a catalyst.

$$2NH_3(g) \rightarrow N_2(g) + 3H_2(g)$$

The student measures the concentration of $NH_3(g)$ as the reaction proceeds.

Two catalysts, tungsten and nickel-loaded silica, are compared.

The student's results using tungsten are plotted on the grid in Figure 2.3. The line of best fit is labelled 'tungsten'.

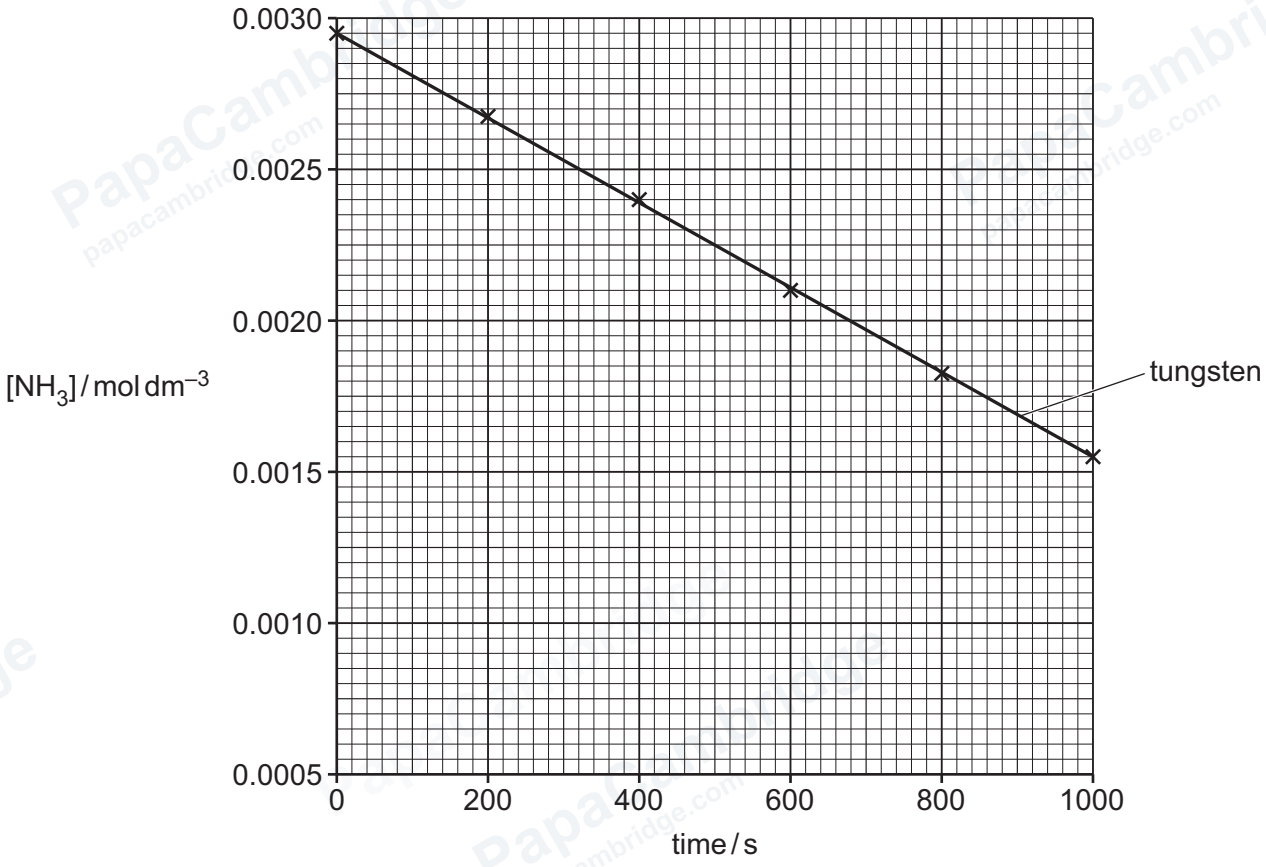

Figure 2.3

DO NOT WRITE IN THIS MARGIN
DO NOT WRITE IN THIS MARGIN
DO NOT WRITE IN THIS MARGIN
DO NOT WRITE IN THIS MARGIN
DO NOT WRITE IN THIS MARGIN

GradeMax

The student repeats the experiment using nickel-loaded silica as the catalyst in place of tungsten.

The student's results using nickel-loaded silica are shown in Table 2.1.

Table 2.1

time / s	$[NH_3]$ / mol dm^{-3}
0	2.95×10^{-3}
200	2.23×10^{-3}
400	1.68×10^{-3}
600	1.27×10^{-3}
800	9.63×10^{-4}
1000	7.27×10^{-4}

(i) Use the results from Table 2.1 to plot another graph on the grid in Figure 2.3 to show the relationship between $[NH_3]$ and time with the nickel-loaded silica catalyst. Use a cross (×) to plot each data point. Draw a line of best fit. Label the line 'silica'. [2]

(ii) Identify the dependent variable in this experiment.

..... [1]

(d) Use the line of best fit in Figure 2.3 for **tungsten** as a catalyst to answer **2(d)(i)**, **2(d)(ii)** and **2(d)(iii)**.

(i) The line for tungsten is of the form $y = mx + c$. State the value of c.

..... [1]

(ii) The student suggests the graph shows that the results for tungsten are reliable.

Explain how the graph supports this suggestion.

.....

..... [1]

(iii) The student concludes that the reaction using tungsten is zero order with respect to $[NH_3]$. State whether the results support the student's conclusion.

Explain your answer.

.....

..... [1]

DO NOT WRITE IN THIS MARGIN
DO NOT WRITE IN THIS MARGIN
DO NOT WRITE IN THIS MARGIN
DO NOT WRITE IN THIS MARGIN
DO NOT WRITE IN THIS MARGIN

GradeMax

(e) Use your line of best fit in Figure 2.3 for **silica** to calculate the half-life, $t_{\frac{1}{2}}$, in s, starting at time = 0 s.

State the coordinates of both points you use in your calculation.

coordinates 1 ..... coordinates 2 .....

half-life = ... s
[2]

(f) In another experiment, a student finds that the half-life remains constant and that its value is 550 s. The student starts with $[NH_3] = 4.00 \times 10^{-3}$ mol dm^{-3}.

Predict the time taken, in s, for $[NH_3]$ to fall to 2.5×10^{-4} mol dm^{-3}.

time taken = ... s [1]

[Total: 14]

DO NOT WRITE IN THIS MARGIN
DO NOT WRITE IN THIS MARGIN
DO NOT WRITE IN THIS MARGIN
DO NOT WRITE IN THIS MARGIN
DO NOT WRITE IN THIS MARGIN

© Cambridge University Press & Assessment 2026

GradeMax

Important values, constants and standards

molar gas constant	$R = 8.31\,\text{J K}^{-1}\,\text{mol}^{-1}$
Faraday constant	$F = 9.65 \times 10^{4}\,\text{C mol}^{-1}$
Avogadro constant	$L = 6.022 \times 10^{23}\,\text{mol}^{-1}$
electronic charge	$e = -1.60 \times 10^{-19}\,\text{C}$
molar volume of gas	$V_m = 22.4\,\text{dm}^3\,\text{mol}^{-1}$ at s.t.p. (101 kPa and 273 K) $V_m = 24.0\,\text{dm}^3\,\text{mol}^{-1}$ at room conditions
ionic product of water	$K_w = 1.00 \times 10^{-14}\,\text{mol}^2\,\text{dm}^{-6}$ (at 298 K (25 °C))
specific heat capacity of water	$c = 4.18\,\text{kJ kg}^{-1}\,\text{K}^{-1}$ ($4.18\,\text{J g}^{-1}\,\text{K}^{-1}$)

DO NOT WRITE IN THIS MARGIN
DO NOT WRITE IN THIS MARGIN
DO NOT WRITE IN THIS MARGIN
DO NOT WRITE IN THIS MARGIN
DO NOT WRITE IN THIS MARGIN

Permission to reproduce items where third-party owned material protected by copyright is included has been sought and cleared where possible. Every reasonable effort has been made by the publisher (Cambridge University Press & Assessment) to trace copyright holders, but if any items requiring clearance have unwittingly been included, the publisher will be pleased to make amends at the earliest possible opportunity.

To avoid the issue of disclosure of answer-related information to candidates, all copyright acknowledgements are reproduced online in our Copyright Acknowledgements Booklet. This is produced for each series of examinations and is freely available to download at www.cambridgeinternational.org after the live examination series.

Cambridge International Education is the name of our awarding body and a part of Cambridge University Press & Assessment, which is a department of the University of Cambridge.

© Cambridge University Press & Assessment 2026

© Cambridge University Press & Assessment 2026

The Periodic Table of Elements

Group 1	2											13	14	15	16	17	18
							1 H hydrogen 1.0										2 He helium 4.0
3 Li lithium 6.9	4 Be beryllium 9.0											5 B boron 10.8	6 C carbon 12.0	7 N nitrogen 14.0	8 O oxygen 16.0	9 F fluorine 19.0	10 Ne neon 20.2
11 Na sodium 23.0	12 Mg magnesium 24.3	3	4	5	6	7	8	9	10	11	12	13 Al aluminium 27.0	14 Si silicon 28.1	15 P phosphorus 31.0	16 S sulfur 32.1	17 Cl chlorine 35.5	18 Ar argon 39.9
19 K potassium 39.1	20 Ca calcium 40.1	21 Sc scandium 45.0	22 Ti titanium 47.9	23 V vanadium 50.9	24 Cr chromium 52.0	25 Mn manganese 54.9	26 Fe iron 55.8	27 Co cobalt 58.9	28 Ni nickel 58.7	29 Cu copper 63.5	30 Zn zinc 65.4	31 Ga gallium 69.7	32 Ge germanium 72.6	33 As arsenic 74.9	34 Se selenium 79.0	35 Br bromine 79.9	36 Kr krypton 83.8
37 Rb rubidium 85.5	38 Sr strontium 87.6	39 Y yttrium 88.9	40 Zr zirconium 91.2	41 Nb niobium 92.9	42 Mo molybdenum 95.9	43 Tc technetium –	44 Ru ruthenium 101.1	45 Rh rhodium 102.9	46 Pd palladium 106.4	47 Ag silver 107.9	48 Cd cadmium 112.4	49 In indium 114.8	50 Sn tin 118.7	51 Sb antimony 121.8	52 Te tellurium 127.6	53 I iodine 126.9	54 Xe xenon 131.3
55 Cs caesium 132.9	56 Ba barium 137.3	57–71 lanthanoids	72 Hf hafnium 178.5	73 Ta tantalum 180.9	74 W tungsten 183.8	75 Re rhenium 186.2	76 Os osmium 190.2	77 Ir iridium 192.2	78 Pt platinum 195.1	79 Au gold 197.0	80 Hg mercury 200.6	81 Tl thallium 204.4	82 Pb lead 207.2	83 Bi bismuth 209.0	84 Po polonium –	85 At astatine –	86 Rn radon –
87 Fr francium –	88 Ra radium –	89–103 actinoids	104 Rf rutherfordium –	105 Db dubnium –	106 Sg seaborgium –	107 Bh bohrium –	108 Hs hassium –	109 Mt meitnerium –	110 Ds darmstadtium –	111 Rg roentgenium –	112 Cn copernicium –	113 Nh nihonium –	114 Fl flerovium –	115 Mc moscovium –	116 Lv livermorium –	117 Ts tennessine –	118 Og oganesson –

Key

atomic number
atomic symbol
name
relative atomic mass

lanthanoids	57 La lanthanum 138.9	58 Ce cerium 140.1	59 Pr praseodymium 140.9	60 Nd neodymium 144.2	61 Pm promethium –	62 Sm samarium 150.4	63 Eu europium 152.0	64 Gd gadolinium 157.3	65 Tb terbium 158.9	66 Dy dysprosium 162.5	67 Ho holmium 164.9	68 Er erbium 167.3	69 Tm thulium 168.9	70 Yb ytterbium 173.1	71 Lu lutetium 175.0
actinoids	89 Ac actinium –	90 Th thorium 232.0	91 Pa protactinium 231.0	92 U uranium 238.0	93 Np neptunium –	94 Pu plutonium –	95 Am americium –	96 Cm curium –	97 Bk berkelium –	98 Cf californium –	99 Es einsteinium –	100 Fm fermium –	101 Md mendelevium –	102 No nobelium –	103 Lr lawrencium –

DO NOT WRITE IN THIS MARGIN DO NOT WRITE IN THIS MARGIN DO NOT WRITE IN THIS MARGIN DO NOT WRITE IN THIS MARGIN DO NOT WRITE IN THIS MARGIN

GradeMax