GradeMax

* 0000800000001 * DFD

CAMBRIDGE
International Education

Cambridge International AS & A Level

CANDIDATE NAME

CENTRE NUMBER

CANDIDATE NUMBER

* 8 7 4 3 2 6 0 7 4 1 *

MATHEMATICS **9709/42**

Paper 4 Mechanics **February/March 2026**

1 hour 15 minutes

You must answer on the question paper.

You will need: List of formulae (MF19)

INSTRUCTIONS

- Answer **all** questions.
- Use a black or dark blue pen. You may use an HB pencil for any diagrams or graphs.
- Write your name, centre number and candidate number in the boxes at the top of the page.
- Write your answer to each question in the space provided.
- Do **not** use an erasable pen. Do **not** use correction fluid or tape.
- Do **not** write on any bar codes.
- If additional space is needed, you should use the lined page at the end of this booklet; the question number or numbers must be clearly shown.
- You should use a calculator where appropriate.
- You must show all necessary working clearly; no marks will be given for unsupported answers from a calculator.
- Give non-exact numerical answers correct to 3 significant figures, or 1 decimal place for angles in degrees, unless a different level of accuracy is specified in the question.
- Where a numerical value for the acceleration due to gravity (g) is needed, use $10\,\text{m}\,\text{s}^{-2}$.

INFORMATION

- The total mark for this paper is 50.
- The number of marks for each question or part question is shown in brackets [ ].

This document has **12** pages.

DC (DE/CT) 357320/4
© Cambridge University Press & Assessment 2026

[Turn over

GradeMax

1 A block of mass 200 kg is pulled along rough horizontal ground at a constant speed of v m s^{-1} by a horizontal rope attached to a winch. The coefficient of friction between the block and the ground is 0.8. The winch is working at a constant rate of 4000 W.

Find the value of v. [4]

DO NOT WRITE IN THIS MARGIN

© Cambridge University Press & Assessment 2026

GradeMax

2 A cyclist starts from rest and moves in a straight line with acceleration $0.5\,\text{m s}^{-2}$ for 10 s. They then accelerate at $1.5\,\text{m s}^{-2}$ for a distance of 13 m, reaching a speed of $v\,\text{m s}^{-1}$. They then travel at speed $v\,\text{m s}^{-1}$ for 5 s. They then travel a distance of 28 m whilst decelerating uniformly to rest.

(a) Find the value of v. [3]

.....

.....

.....

.....

.....

.....

.....

.....

(b) **(i)** Find the total distance travelled by the cyclist. [2]

.....

.....

.....

.....

.....

.....

.....

(ii) Find the average speed of the cyclist for the whole of their motion. [2]

.....

.....

.....

.....

.....

.....

.....

DO NOT WRITE IN THIS MARGIN
DO NOT WRITE IN THIS MARGIN
DO NOT WRITE IN THIS MARGIN
DO NOT WRITE IN THIS MARGIN
DO NOT WRITE IN THIS MARGIN

© Cambridge University Press & Assessment 2026

GradeMax

3

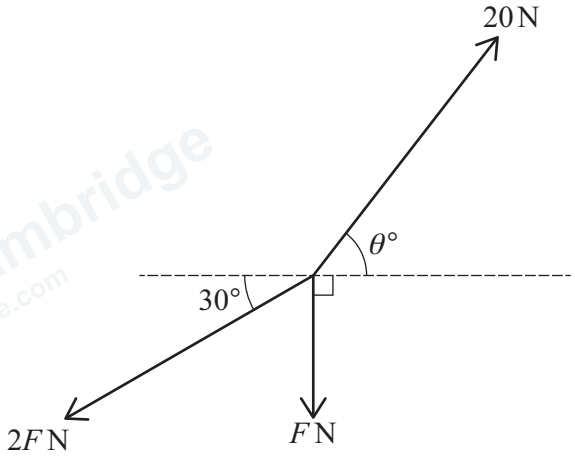

Coplanar forces of magnitudes FN, $2F$N and 20 N act at a point, as shown in the diagram.

Given that the forces are in equilibrium, find the value of F and the value of θ. [6]

DO NOT WRITE IN THIS MARGIN
DO NOT WRITE IN THIS MARGIN
DO NOT WRITE IN THIS MARGIN
DO NOT WRITE IN THIS MARGIN
DO NOT WRITE IN THIS MARGIN

© Cambridge University Press & Assessment 2026

GradeMax

4 A car of mass 1600 kg passes through points A and B with speeds $10\,\text{m}\,\text{s}^{-1}$ and $12\,\text{m}\,\text{s}^{-1}$ respectively. The distance AB is 2 km. The heights of A and B above sea level are 250 m and 200 m respectively. The car's engine does no work in moving from A to B. There are two forces resisting the motion of the car, a braking force and an additional constant force of magnitude 150 N.

Use an energy method to find the work done by the braking force as the car moves from A to B. [5]

DO NOT WRITE IN THIS MARGIN
DO NOT WRITE IN THIS MARGIN
DO NOT WRITE IN THIS MARGIN
DO NOT WRITE IN THIS MARGIN
DO NOT WRITE IN THIS MARGIN

© Cambridge University Press & Assessment 2026

GradeMax

5

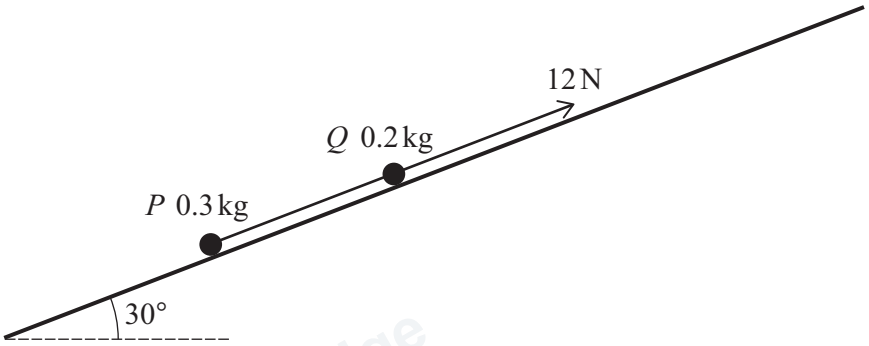

A particle P of mass 0.3 kg is connected by a light inextensible string to a particle Q of mass 0.2 kg. The string joining the two particles is taut and is parallel to a line of greatest slope of a rough plane which is inclined at an angle of 30° to the horizontal. A constant force of magnitude 12 N acts on Q and pulls the particles up the plane. The 12 N force acts parallel to a line of greatest slope of the plane (see diagram). The coefficient of friction between each of the particles and the plane is 0.4.

(a) Find the magnitude of the acceleration of the particles and the tension in the string. [6]

DO NOT WRITE IN THIS MARGIN

© Cambridge University Press & Assessment 2026

DO NOT WRITE IN THIS MARGIN
DO NOT WRITE IN THIS MARGIN
DO NOT WRITE IN THIS MARGIN
DO NOT WRITE IN THIS MARGIN
DO NOT WRITE IN THIS MARGIN

.....

.....

.....

.....

.....

.....

.....

(b) At the instant when the speed of the particles is $2\,\text{m}\,\text{s}^{-1}$, the string breaks.

Find the time it takes from the instant the string breaks until P comes to instantaneous rest. [3]

.....

.....

.....

.....

.....

.....

.....

.....

.....

.....

.....

.....

.....

.....

.....

.....

.....

© Cambridge University Press & Assessment 2026

GradeMax

6 Two particles P and Q of masses $4m$ kg and $3m$ kg respectively are at rest on smooth horizontal ground. P is projected directly towards Q with speed $6.5\,\text{m s}^{-1}$. After the particles collide, they move in the same direction and the speeds of P and Q are $2\,\text{m s}^{-1}$ and $v\,\text{m s}^{-1}$ respectively.

(a) (i) Show that $v = 6$. [2]

.....

.....

.....

.....

.....

.....

.....

.....

(ii) Given that the energy lost in the collision between P and Q is 45 J, find the value of m. [2]

.....

.....

.....

.....

.....

.....

.....

.....

.....

.....

.....

.....

.....

.....

.....

.....

.....

© Cambridge University Press & Assessment 2026

DO NOT WRITE IN THIS MARGIN
DO NOT WRITE IN THIS MARGIN
DO NOT WRITE IN THIS MARGIN
DO NOT WRITE IN THIS MARGIN
DO NOT WRITE IN THIS MARGIN

GradeMax

After Q has moved a distance of 9 m from the point at which P and Q first collided, it hits a vertical wall perpendicular to the direction of motion of Q and rebounds. The speed of Q after hitting the wall is $0.5\,\text{m}\,\text{s}^{-1}$.

(b) Find the distance from the wall to the point at which the second collision between P and Q occurs. [5]

DO NOT WRITE IN THIS MARGIN
DO NOT WRITE IN THIS MARGIN
DO NOT WRITE IN THIS MARGIN
DO NOT WRITE IN THIS MARGIN
DO NOT WRITE IN THIS MARGIN

© Cambridge University Press & Assessment 2026

GradeMax

7 A particle P travels in a straight line. The velocity of P at time t s is v m s^{-1}, where

$$v = t - 7t^{\frac{1}{2}} + 12.$$

(a) Find the acceleration of P at $t = 4$. [2]

.....

.....

.....

.....

.....

(b) Find the values of t at which P is instantaneously at rest. [3]

.....

.....

.....

.....

.....

.....

.....

.....

.....

.....

.....

.....

.....

.....

.....

.....

.....

DO NOT WRITE IN THIS MARGIN
DO NOT WRITE IN THIS MARGIN
DO NOT WRITE IN THIS MARGIN
DO NOT WRITE IN THIS MARGIN
DO NOT WRITE IN THIS MARGIN

© Cambridge University Press & Assessment 2026

GradeMax

(c) Find the total distance travelled by P in the interval $0 \leqslant t \leqslant 25$. [5]

DO NOT WRITE IN THIS MARGIN
DO NOT WRITE IN THIS MARGIN
DO NOT WRITE IN THIS MARGIN
DO NOT WRITE IN THIS MARGIN
DO NOT WRITE IN THIS MARGIN

PapaCambridge papacambridge.com

© Cambridge University Press & Assessment 2026

GradeMax

Additional page

If you use the following page to complete the answer to any question, the question number must be clearly shown.

DO NOT WRITE IN THIS MARGIN
DO NOT WRITE IN THIS MARGIN
DO NOT WRITE IN THIS MARGIN
DO NOT WRITE IN THIS MARGIN
DO NOT WRITE IN THIS MARGIN

Permission to reproduce items where third-party owned material protected by copyright is included has been sought and cleared where possible. Every reasonable effort has been made by the publisher (Cambridge University Press & Assessment) to trace copyright holders, but if any items requiring clearance have unwittingly been included, the publisher will be pleased to make amends at the earliest possible opportunity.

To avoid the issue of disclosure of answer-related information to candidates, all copyright acknowledgements are reproduced online in our Copyright Acknowledgements Booklet. This is produced for each series of examinations and is freely available to download at www.cambridgeinternational.org after the live examination series.

Cambridge International Education is the name of our awarding body and a part of Cambridge University Press & Assessment, which is a department of the University of Cambridge.

© Cambridge University Press & Assessment 2026