GradeMax

* 0000800000001 * DFD

CAMBRIDGE
International Education

# Cambridge International AS & A Level

CANDIDATE NAME

CENTRE NUMBER

CANDIDATE NUMBER

*7222207883 9*

**MATHEMATICS** **9709/42**

Paper 4 Mechanics **May/June 2026**

**1 hour 15 minutes**

You must answer on the question paper.

You will need: List of formulae (MF19)

**INSTRUCTIONS**

- Answer **all** questions.
- Use a black or dark blue pen. You may use an HB pencil for any diagrams or graphs.
- Write your name, centre number and candidate number in the boxes at the top of the page.
- Write your answer to each question in the space provided.
- Do **not** use an erasable pen. Do **not** use correction fluid or tape.
- Do **not** write on any bar codes.
- If additional space is needed, you should use the lined page at the end of this booklet; the question number or numbers must be clearly shown.
- You should use a calculator where appropriate.
- You must show all necessary working clearly; no marks will be given for unsupported answers from a calculator.
- Give non-exact numerical answers correct to 3 significant figures, or 1 decimal place for angles in degrees, unless a different level of accuracy is specified in the question.
- Where a numerical value for the acceleration due to gravity ($g$) is needed, use $10\,\text{m}\,\text{s}^{-2}$.

**INFORMATION**

- The total mark for this paper is 50.
- The number of marks for each question or part question is shown in brackets [ ].

This document has **16** pages. Any blank pages are indicated.

DC (DE/SG) 357334/5
© Cambridge University Press & Assessment 2026

**[Turn over**

GradeMax



**1** A car of mass 960 kg is moving on a straight horizontal road. There is a constant force of magnitude 620 N resisting the motion of the car.

**(a)** Calculate the power developed by the engine of the car when it is moving at a constant speed of $25\,m\,s^{-1}$. [2]

.....

.....

.....

.....

.....

.....

.....

.....

.....

.....

**(b)** Given that the power is suddenly increased **by** 12 kW, find the instantaneous acceleration of the car. [2]

.....

.....

.....

.....

.....

.....

.....

.....

.....

.....

.....

.....

.....

.....

© Cambridge University Press & Assessment 2026



DO NOT WRITE IN THIS MARGIN
DO NOT WRITE IN THIS MARGIN
DO NOT WRITE IN THIS MARGIN
DO NOT WRITE IN THIS MARGIN
DO NOT WRITE IN THIS MARGIN

GradeMax



**2** Two particles, $A$ and $B$, of masses 2.5 kg and 3.5 kg respectively are at rest on a straight smooth horizontal track. Particle $B$ is situated 9 m from a vertical wall which is fixed at right angles to the track.

Particle $A$ is projected directly towards $B$ with a speed of $3\,\text{m}\,\text{s}^{-1}$. In the subsequent motion, $A$ collides and coalesces with $B$ to form particle $C$. Particle $C$ then collides directly with the wall and rebounds. The collision of $C$ with the wall reduces the speed of $C$ by 25%.

**(a)** Find the speed of $C$ after it rebounds from the wall. [2]

.....

.....

.....

.....

.....

.....

.....

.....

.....

**(b)** Hence find the time from the instant at which $A$ and $B$ collide until $C$ is once again a distance of 9 m from the wall. [2]

.....

.....

.....

.....

.....

.....

.....

.....

.....

.....

.....

.....

DO NOT WRITE IN THIS MARGIN
DO NOT WRITE IN THIS MARGIN
DO NOT WRITE IN THIS MARGIN
DO NOT WRITE IN THIS MARGIN
DO NOT WRITE IN THIS MARGIN

© Cambridge University Press & Assessment 2026

GradeMax



**3**

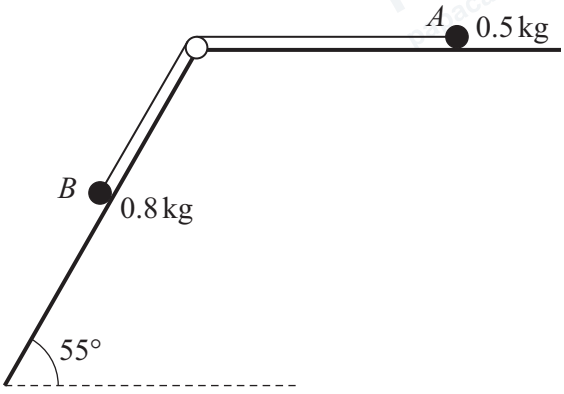


Two particles, $A$ and $B$, of masses 0.5 kg and 0.8 kg respectively are attached to the ends of a light inextensible string. The string passes over a small smooth pulley fixed at the end of a rough horizontal plane and to the top of a smooth inclined plane. Particle $A$ is held on the horizontal plane, while $B$ lies on the inclined plane, which makes an angle of 55° with the horizontal. The string is in the same vertical plane as a line of greatest slope of the inclined plane (see diagram).

Particle $A$ is released from rest with the string taut. Particle $B$ moves 0.3 m down the inclined plane in 0.4 s.

**(a)** Find the tension in the string. [4]

.....

.....

.....

.....

.....

.....

.....

.....

.....

.....

.....

.....

.....

.....

.....

© Cambridge University Press & Assessment 2026 

DO NOT WRITE IN THIS MARGIN
DO NOT WRITE IN THIS MARGIN
DO NOT WRITE IN THIS MARGIN
DO NOT WRITE IN THIS MARGIN
DO NOT WRITE IN THIS MARGIN

GradeMax



**(b)** Find the coefficient of friction between $A$ and the horizontal plane. [3]

.....

.....

.....

.....

.....

.....

.....

.....

.....

.....

.....

**(c)** After $B$ has been moving for 0.4 s, the string suddenly breaks. Given that $A$ subsequently comes to rest on the horizontal plane, find the work done by the frictional force in bringing $A$ to rest. You may assume that $A$ does not reach the pulley. [3]

.....

.....

.....

.....

.....

.....

.....

.....

.....

.....

.....

DO NOT WRITE IN THIS MARGIN
DO NOT WRITE IN THIS MARGIN
DO NOT WRITE IN THIS MARGIN
DO NOT WRITE IN THIS MARGIN
DO NOT WRITE IN THIS MARGIN

© Cambridge University Press & Assessment 2026

GradeMax



**4**

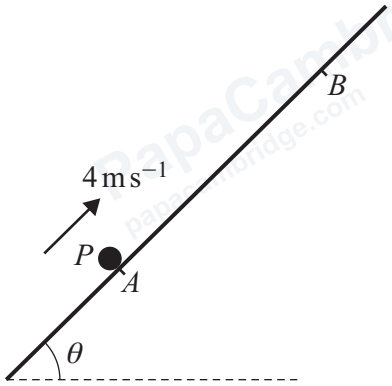


A particle $P$ is projected from a point $A$ with speed $4\,\text{m s}^{-1}$ up a line of greatest slope of a rough plane inclined at an angle $\theta$ to the horizontal, where $\tan\theta = \frac{4}{3}$.

$P$ comes to instantaneous rest at a point $B$ on the plane (see diagram).

The coefficient of friction between $P$ and the plane is $\frac{1}{3}$.

**(a)** Using an energy method, show that the distance $AB$ is $0.8\,\text{m}$. [4]

DO NOT WRITE IN THIS MARGIN
DO NOT WRITE IN THIS MARGIN
DO NOT WRITE IN THIS MARGIN
DO NOT WRITE IN THIS MARGIN
DO NOT WRITE IN THIS MARGIN

© Cambridge University Press & Assessment 2026

GradeMax



**(b)** After coming to instantaneous rest at $B$, the particle slides down the plane.

Find the total time from the instant at which $P$ is projected from $A$ until it returns to $A$. [5]

DO NOT WRITE IN THIS MARGIN
DO NOT WRITE IN THIS MARGIN
DO NOT WRITE IN THIS MARGIN
DO NOT WRITE IN THIS MARGIN
DO NOT WRITE IN THIS MARGIN

GradeMax



**5** The points $A$ and $B$ are at the same vertical height $h$ m above horizontal ground. A particle $P$ is released from rest from $A$. One second later, a particle $Q$ is projected vertically downwards from $B$ with speed $18\,\text{m}\,\text{s}^{-1}$.

Given that $P$ and $Q$ reach the ground at the same time, find the value of $h$. [6]

DO NOT WRITE IN THIS MARGIN

© Cambridge University Press & Assessment 2026

GradeMax



DO NOT WRITE IN THIS MARGIN
DO NOT WRITE IN THIS MARGIN
DO NOT WRITE IN THIS MARGIN
DO NOT WRITE IN THIS MARGIN
DO NOT WRITE IN THIS MARGIN

© Cambridge University Press & Assessment 2026

6

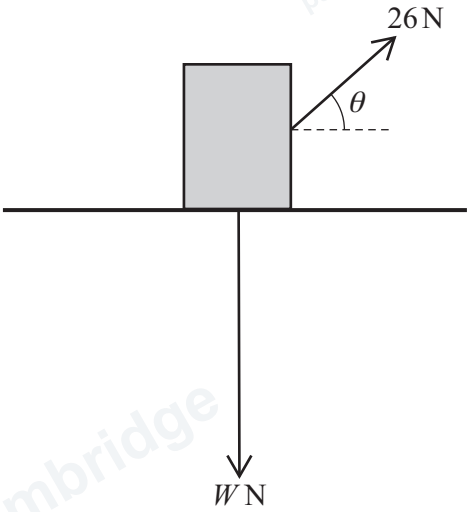


A crate of weight $W$ N is at rest on rough horizontal ground. The crate is pulled at a constant acceleration of $1.5\,\text{m}\,\text{s}^{-2}$ along the ground in a straight line by a light rope. The rope is inclined at an angle of $\theta$ to the horizontal, where $\theta = \sin^{-1}\frac{5}{13}$. The tension in the rope is 26 N (see diagram). The coefficient of friction between the crate and the ground is 0.25.

**(a)** Find the value of $W$. [5]

DO NOT WRITE IN THIS MARGIN

GradeMax



.....

.....

.....

.....

.....

**(b)** When the crate reaches a point $A$, the rope is removed. The speed of the crate at $A$ is $8\,\text{m}\,\text{s}^{-1}$.

The crate comes to rest at a point $B$.

Find the distance $AB$. [3]

.....

.....

.....

.....

.....

.....

.....

.....

.....

.....

.....

.....

.....

.....

.....

.....

.....

.....

.....

DO NOT WRITE IN THIS MARGIN
DO NOT WRITE IN THIS MARGIN
DO NOT WRITE IN THIS MARGIN
DO NOT WRITE IN THIS MARGIN
DO NOT WRITE IN THIS MARGIN

GradeMax



**7** A particle $P$ moves in a straight line. The velocity $v\,\text{m}\,\text{s}^{-1}$ of $P$ at time $t\,\text{s}$, where $t \geqslant 0$, is given by

$$v = k_1(4t+11)^{\frac{1}{2}} - \tfrac{1}{4}(2t+1)^2 + k_2,$$

where $k_1$ and $k_2$ are constants. When $t = 1.25$ the deceleration of $P$ is $0.5\,\text{m}\,\text{s}^{-2}$.

**(a)** Find the value of $k_1$. [4]

DO NOT WRITE IN THIS MARGIN
DO NOT WRITE IN THIS MARGIN
DO NOT WRITE IN THIS MARGIN
DO NOT WRITE IN THIS MARGIN
DO NOT WRITE IN THIS MARGIN

© Cambridge University Press & Assessment 2026 

GradeMax



**(b)** Given that $P$ is only at instantaneous rest when $t = 3.5$, find the distance travelled by $P$ in the interval $0 \leqslant t \leqslant 1$. [5]

DO NOT WRITE IN THIS MARGIN
DO NOT WRITE IN THIS MARGIN
DO NOT WRITE IN THIS MARGIN
DO NOT WRITE IN THIS MARGIN
DO NOT WRITE IN THIS MARGIN

© Cambridge University Press & Assessment 2026

GradeMax



## Additional page

If you use the following page to complete the answer to any question, the question number must be clearly shown.

DO NOT WRITE IN THIS MARGIN
DO NOT WRITE IN THIS MARGIN
DO NOT WRITE IN THIS MARGIN
DO NOT WRITE IN THIS MARGIN
DO NOT WRITE IN THIS MARGIN

© Cambridge University Press & Assessment 2026 

GradeMax



**BLANK PAGE**

DO NOT WRITE IN THIS MARGIN
DO NOT WRITE IN THIS MARGIN
DO NOT WRITE IN THIS MARGIN
DO NOT WRITE IN THIS MARGIN
DO NOT WRITE IN THIS MARGIN

© Cambridge University Press & Assessment 2026 

GradeMax



**BLANK PAGE**

DO NOT WRITE IN THIS MARGIN
DO NOT WRITE IN THIS MARGIN
DO NOT WRITE IN THIS MARGIN
DO NOT WRITE IN THIS MARGIN
DO NOT WRITE IN THIS MARGIN

Permission to reproduce items where third-party owned material protected by copyright is included has been sought and cleared where possible. Every reasonable effort has been made by the publisher (Cambridge University Press & Assessment) to trace copyright holders, but if any items requiring clearance have unwittingly been included, the publisher will be pleased to make amends at the earliest possible opportunity.

To avoid the issue of disclosure of answer-related information to candidates, all copyright acknowledgements are reproduced online in our Copyright Acknowledgements Booklet. This is produced for each series of examinations and is freely available to download at www.cambridgeinternational.org after the live examination series.

Cambridge International Education is the name of our awarding body and a part of Cambridge University Press & Assessment, which is a department of the University of Cambridge.

© Cambridge University Press & Assessment 2026 