GradeMax

Cambridge International AS & A Level

Cambridge International Examinations
Cambridge International Advanced Subsidiary and Advanced Level

CANDIDATE NAME

CENTRE NUMBER | | | | | |

CANDIDATE NUMBER | | | | |

3729562004

PHYSICS **9702/52**

Paper 5 Planning, Analysis and Evaluation **February/March 2017**

1 hour 15 minutes

Candidates answer on the Question Paper.

No Additional Materials are required.

READ THESE INSTRUCTIONS FIRST

Write your Centre number, candidate number and name on all the work you hand in.
Write in dark blue or black pen.
You may use an HB pencil for any diagrams or graphs.
Do not use staples, paper clips, glue or correction fluid.
DO **NOT** WRITE IN ANY BARCODES.

Answer **all** questions.

Electronic calculators may be used.
You may lose marks if you do not show your working or if you do not use appropriate units.

At the end of the examination, fasten all your work securely together.
The number of marks is given in brackets [ ] at the end of each question or part question.

This document consists of **8** printed pages.

DC (KN/SG) 128172/3
© UCLES 2017

CAMBRIDGE International Examinations

[Turn over

GradeMax

1 A student is investigating the speed of a vehicle on a track when a small ball is projected into the vehicle, as shown in Fig. 1.1.

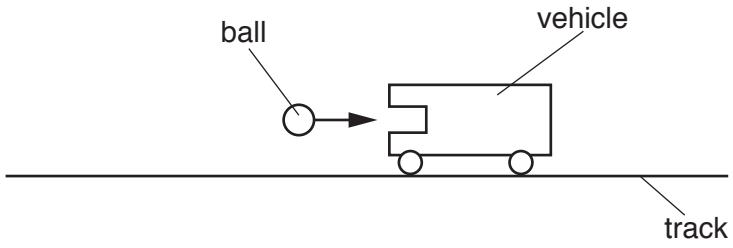

Fig. 1.1

The ball is projected towards the vehicle by a compressed spring. It is suggested that the relationship between the speed v of the vehicle and its mass M, after the ball embeds itself in the vehicle, is

$$kx^2 = (M + b)v^2$$

where b is the mass of the ball, k is the spring constant and x is the compression of the spring.

Design a laboratory experiment to test the relationship between v and M.
Explain how your results could be used to plot a graph with $1/v^2$ on the y-axis and to determine a value for k. You should draw a diagram, on page 3, showing the arrangement of your equipment.

In your account you should pay particular attention to

- the procedure to be followed
- the measurements to be taken
- the control of variables
- the analysis of the data
- any safety precautions to be taken.

[15]

© UCLES 2017

Diagram

.....

.....

.....

.....

.....

.....

.....

.....

.....

.....

.....

.....

.....

.....

.....

GradeMax

[Total: 15]

© UCLES 2017

2 A student is investigating the potential difference in a circuit. The circuit is set up as shown in Fig. 2.1.

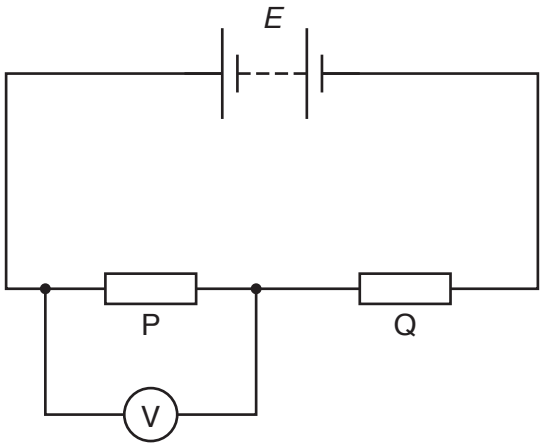

Fig. 2.1

Two resistors P and Q are connected in series to a power supply of electromotive force (e.m.f.) E and negligible internal resistance. Resistor P has resistance P.

The potential difference V across resistor P is measured. The experiment is repeated for different values of P.

It is suggested that V and P are related by the equation

$$V = \left(\frac{P}{P + Q}\right) E$$

where Q is the resistance of resistor Q. The value of Q is kept constant.

(a) A graph is plotted of $\frac{1}{V}$ on the y-axis against $\frac{1}{P}$ on the x-axis.

Determine expressions for the gradient and the y-intercept.

gradient = ...

y-intercept = ...

[1]

© UCLES 2017

(b) Values of P and V are given in Fig. 2.2.

P/Ω	V/V	$\frac{1}{P}/10^{-3}\,\Omega^{-1}$	$\frac{1}{V}/\text{V}^{-1}$
250 ± 10%	0.66		
330 ± 10%	0.86		
470 ± 10%	1.15		
560 ± 10%	1.30		
680 ± 10%	1.49		
840 ± 10%	1.64		

Fig. 2.2

Calculate and record values of $\frac{1}{P}/10^{-3}\,\Omega^{-1}$ and $\frac{1}{V}/\text{V}^{-1}$ in Fig. 2.2.

Include the absolute uncertainties in $\frac{1}{P}$. [3]

(c) **(i)** Plot a graph of $\frac{1}{V}/\text{V}^{-1}$ against $\frac{1}{P}/10^{-3}\,\Omega^{-1}$.

Include error bars for $\frac{1}{P}$. [2]

(ii) Draw the straight line of best fit and a worst acceptable straight line on your graph. Both lines should be clearly labelled. [2]

(iii) Determine the gradient of the line of best fit. Include the absolute uncertainty in your answer.

gradient = ... [2]

© UCLES 2017

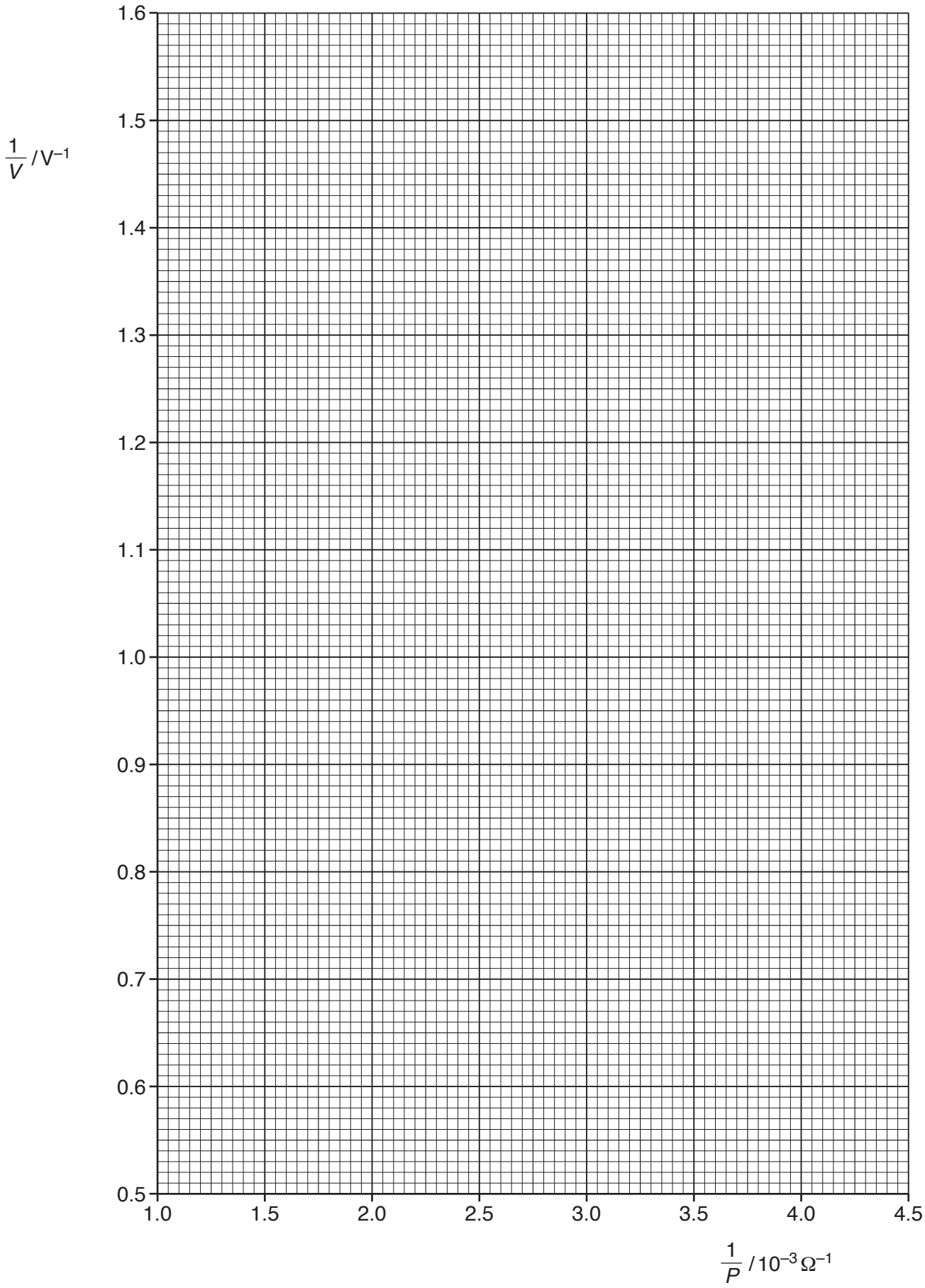
1.6
1.5
1.4
1.3
1.2
1.1
1.0
0.9
0.8
0.7
0.6
0.5
1/V / V⁻¹
1.0
1.5
2.0
2.5
3.0
3.5
4.0
4.5
1/P / 10⁻³ Ω⁻¹

GradeMax

(iv) Determine the *y*-intercept of the line of best fit. Include the absolute uncertainty in your answer.

y-intercept = ... [2]

(d) (i) Using your answers to **(a)**, **(c)(iii)** and **(c)(iv)**, determine the values of *E* and *Q*. Include appropriate units.

E = ...

Q = ...
[2]

(ii) Determine the percentage uncertainty in *Q*.

percentage uncertainty in *Q* = ... % [1]

[Total: 15]

Permission to reproduce items where third-party owned material protected by copyright is included has been sought and cleared where possible. Every reasonable effort has been made by the publisher (UCLES) to trace copyright holders, but if any items requiring clearance have unwittingly been included, the publisher will be pleased to make amends at the earliest possible opportunity.

To avoid the issue of disclosure of answer-related information to candidates, all copyright acknowledgements are reproduced online in the Cambridge International Examinations Copyright Acknowledgements Booklet. This is produced for each series of examinations and is freely available to download at www.cie.org.uk after the live examination series.

Cambridge International Examinations is part of the Cambridge Assessment Group. Cambridge Assessment is the brand name of University of Cambridge Local Examinations Syndicate (UCLES), which is itself a department of the University of Cambridge.

© UCLES 2017