GradeMax

Cambridge Assessment International Education

Cambridge International AS & A Level

CANDIDATE NAME

CENTRE NUMBER | | | | | |

CANDIDATE NUMBER | | | | |

7131956991

PHYSICS **9702/22**

Paper 2 AS Level Structured Questions **February/March 2021**

1 hour 15 minutes

You must answer on the question paper.

No additional materials are needed.

INSTRUCTIONS

- Answer **all** questions.
- Use a black or dark blue pen. You may use an HB pencil for any diagrams or graphs.
- Write your name, centre number and candidate number in the boxes at the top of the page.
- Write your answer to each question in the space provided.
- Do **not** use an erasable pen or correction fluid.
- Do **not** write on any bar codes.
- You may use a calculator.
- You should show all your working and use appropriate units.

INFORMATION

- The total mark for this paper is 60.
- The number of marks for each question or part question is shown in brackets [ ].

This document has **20** pages. Any blank pages are indicated.

DC (MS/CT) 199879/2
© UCLES 2021

[Turn over

GradeMax

Data

speed of light in free space	$c = 3.00 \times 10^{8}\,\text{m s}^{-1}$
permeability of free space	$\mu_0 = 4\pi \times 10^{-7}\,\text{H m}^{-1}$
permittivity of free space	$\varepsilon_0 = 8.85 \times 10^{-12}\,\text{F m}^{-1}$
	$(\frac{1}{4\pi\varepsilon_0} = 8.99 \times 10^{9}\,\text{m F}^{-1})$
elementary charge	$e = 1.60 \times 10^{-19}\,\text{C}$
the Planck constant	$h = 6.63 \times 10^{-34}\,\text{J s}$
unified atomic mass unit	$1\,\text{u} = 1.66 \times 10^{-27}\,\text{kg}$
rest mass of electron	$m_e = 9.11 \times 10^{-31}\,\text{kg}$
rest mass of proton	$m_p = 1.67 \times 10^{-27}\,\text{kg}$
molar gas constant	$R = 8.31\,\text{J K}^{-1}\,\text{mol}^{-1}$
the Avogadro constant	$N_A = 6.02 \times 10^{23}\,\text{mol}^{-1}$
the Boltzmann constant	$k = 1.38 \times 10^{-23}\,\text{J K}^{-1}$
gravitational constant	$G = 6.67 \times 10^{-11}\,\text{N m}^2\,\text{kg}^{-2}$
acceleration of free fall	$g = 9.81\,\text{m s}^{-2}$

© UCLES 2021

GradeMax

Formulae

uniformly accelerated motion	$s = ut + \frac{1}{2}at^2$ $v^2 = u^2 + 2as$
work done on/by a gas	$W = p\Delta V$
gravitational potential	$\phi = -\frac{Gm}{r}$
hydrostatic pressure	$p = \rho gh$
pressure of an ideal gas	$p = \frac{1}{3}\frac{Nm}{V}\langle c^2 \rangle$
simple harmonic motion	$a = -\omega^2 x$
velocity of particle in s.h.m.	$v = v_0 \cos \omega t$ $v = \pm \omega \sqrt{(x_0^2 - x^2)}$
Doppler effect	$f_o = \frac{f_s v}{v \pm v_s}$
electric potential	$V = \frac{Q}{4\pi\varepsilon_0 r}$
capacitors in series	$1/C = 1/C_1 + 1/C_2 + \ldots$
capacitors in parallel	$C = C_1 + C_2 + \ldots$
energy of charged capacitor	$W = \frac{1}{2}QV$
electric current	$I = Anvq$
resistors in series	$R = R_1 + R_2 + \ldots$
resistors in parallel	$1/R = 1/R_1 + 1/R_2 + \ldots$
Hall voltage	$V_H = \frac{BI}{ntq}$
alternating current/voltage	$x = x_0 \sin \omega t$
radioactive decay	$x = x_0 \exp(-\lambda t)$
decay constant	$\lambda = \frac{0.693}{t_{\frac{1}{2}}}$

© UCLES 2021

[Turn over

Answer **all** the questions in the spaces provided.

1 **(a)** Complete Table 1.1 by stating whether each of the quantities is a vector or a scalar.

Table 1.1

quantity	vector or scalar
acceleration	
power	
work	

[2]

(b) The variation with time t of the velocity v of an object is shown in Fig. 1.1.

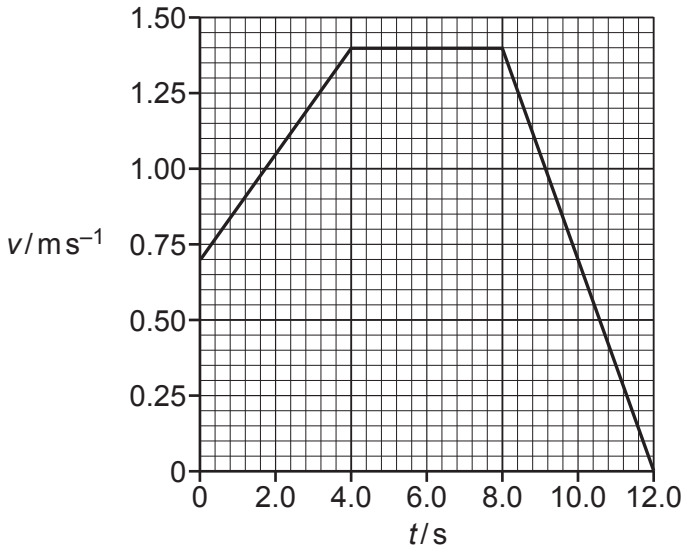

Fig. 1.1

(i) Determine the acceleration of the object from time $t = 0$ to time $t = 4.0\,s$.

acceleration = ... $m\,s^{-2}$ [2]

© UCLES 2021

(ii) Determine the distance moved by the object from time $t = 0$ to time $t = 4.0\,s$.

distance = ... m [2]

(c) (i) Define *force*.

.....

..... [1]

(ii) The motion represented in Fig. 1.1 is caused by a resultant force F acting on the object.

On Fig. 1.2, sketch the variation of F with time t from $t = 0$ to $t = 12.0\,s$.
Numerical values of F are not required.

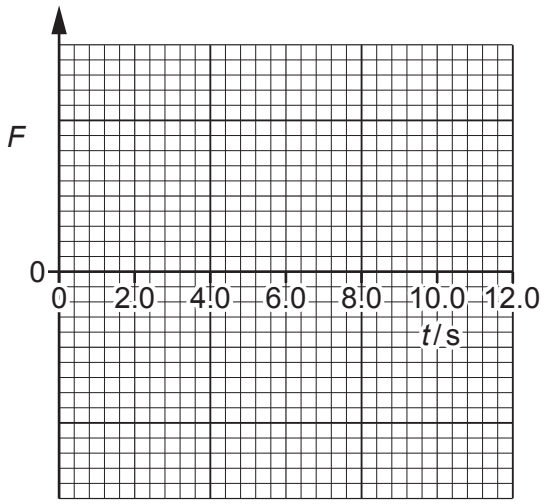

Fig. 1.2

[3]

[Total: 10]

2 **(a)** State what is meant by *work done*.

.....

..... [1]

(b) A beach ball is released from a balcony at the top of a tall building. The ball falls vertically from rest and reaches a constant (terminal) velocity. The gravitational potential energy of the ball decreases by 60 J as it falls from the balcony to the ground. The ball hits the ground with speed 16 m s^{-1} and kinetic energy 23 J.

(i) Show that the mass of the ball is 0.18 kg.

[2]

(ii) Calculate the height of the balcony above the ground.

height = ... m [2]

(iii) Determine the average resistive force acting on the ball as it falls from the balcony to the ground.

average resistive force = ... N [2]

© UCLES 2021

GradeMax

(c) State and explain the variation, if any, in the magnitude of the acceleration of the ball in **(b)** during the time interval when the ball is moving downwards **before** it reaches constant (terminal) velocity.

.....

.....

.....

.....

.....

..... [3]

[Total: 10]

3 A spring is extended by a force. The variation with extension x of the force F is shown in Fig. 3.1.

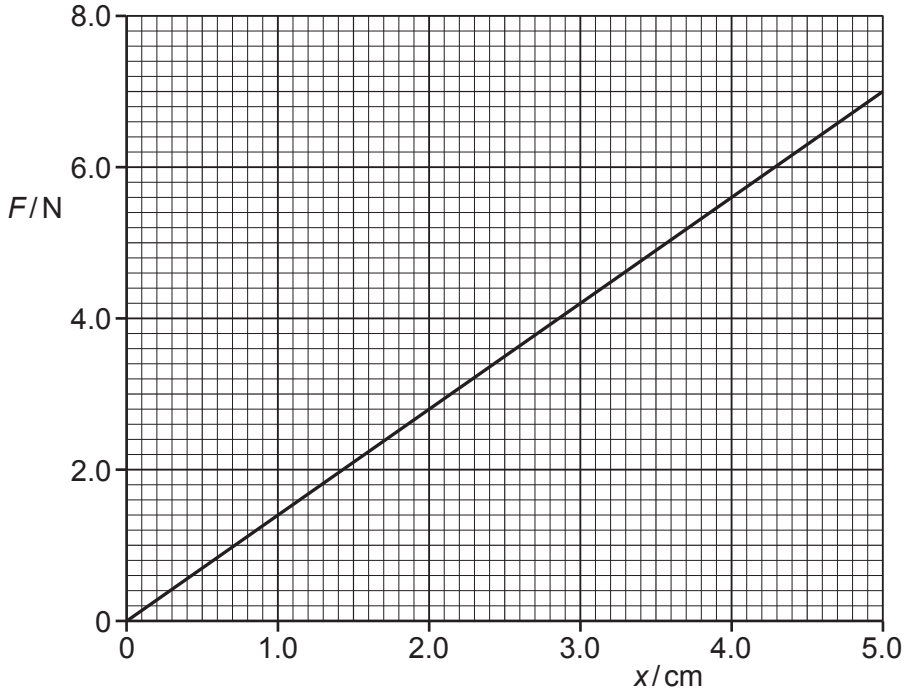

Fig. 3.1

(a) State the name of the law that relates the force and extension of the spring shown in Fig. 3.1.

..... [1]

(b) Determine:

(i) the spring constant, in $N\,m^{-1}$, of the spring

spring constant = ... $N\,m^{-1}$ [2]

(ii) the strain energy (elastic potential energy) in the spring when the extension is 4.0 cm.

strain energy = ... J [2]

© UCLES 2021

(c) One end of the spring is attached to a fixed point. A cylinder that is submerged in a liquid is now suspended from the other end of the spring, as shown in Fig. 3.2.

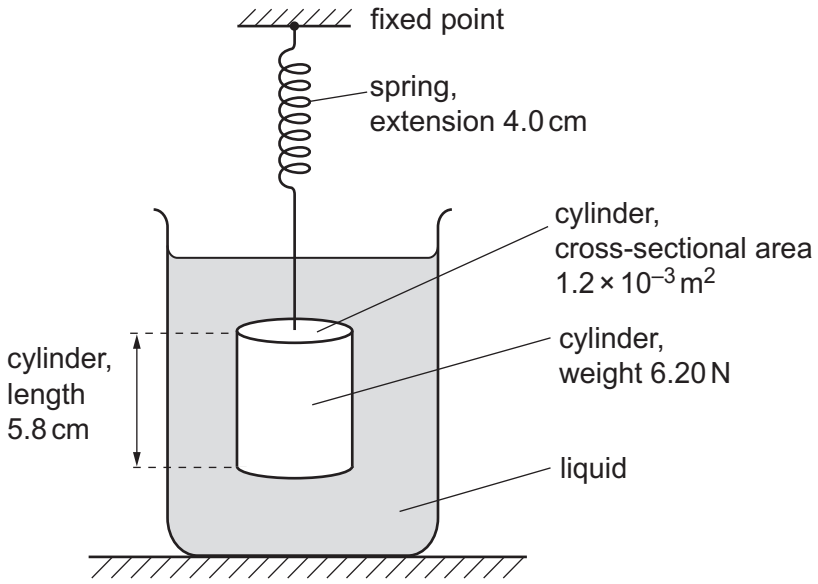

Fig. 3.2

The cylinder has length 5.8 cm, cross-sectional area $1.2 \times 10^{-3}\,m^2$ and weight 6.20 N. The cylinder is in equilibrium when the extension of the spring is 4.0 cm.

(i) Show that the upthrust acting on the cylinder is 0.60 N.

[1]

(ii) Calculate the difference in pressure between the bottom face and the top face of the cylinder.

difference in pressure = ... Pa [2]

© UCLES 2021

GradeMax

(iii) Calculate the density of the liquid.

density = ... $kg\,m^{-3}$ [2]

(d) The liquid in **(c)** is replaced by another liquid of greater density.

State the effect, if any, of this change on:

(i) the upthrust acting on the cylinder

..... [1]

(ii) the extension of the spring.

..... [1]

[Total: 12]

© UCLES 2021

GradeMax

BLANK PAGE

GradeMax

4 **(a)** State the principle of superposition.

.....

.....

..... [2]

(b) A transmitter produces microwaves that travel in air towards a metal plate, as shown in Fig. 4.1.

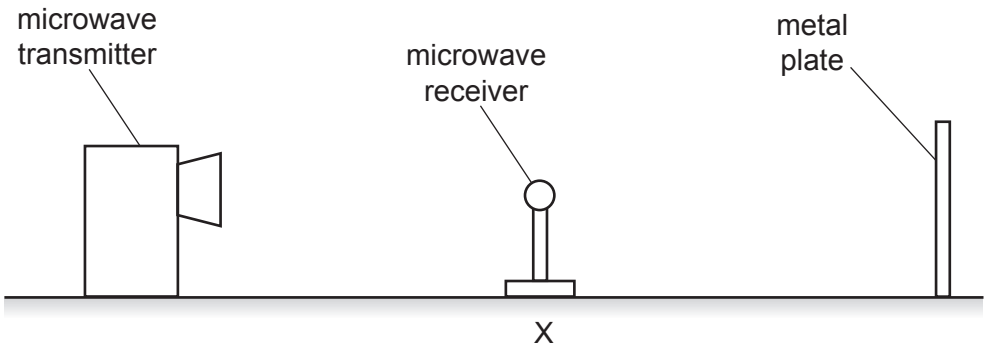

Fig. 4.1

The microwaves have a wavelength of 0.040 m. A stationary wave is formed between the transmitter and the plate.

(i) Explain the function of the metal plate.

.....

..... [1]

(ii) Calculate the frequency, in GHz, of the microwaves.

frequency = ... GHz [3]

© UCLES 2021

GradeMax

(iii) A microwave receiver is initially placed at position X where it detects an intensity minimum. The receiver is then slowly moved away from X directly towards the plate.

1. Determine the shortest distance from X of the receiver when it detects another intensity minimum.

distance = ... m

2. Determine the number of intensity maxima that are detected by the receiver as it moves from X to a position that is 9.1 cm away from X.

number = ...
[2]

[Total: 8]

5 A source of sound is attached to a rope and then swung at a constant speed in a horizontal circle, as illustrated in Fig. 5.1.

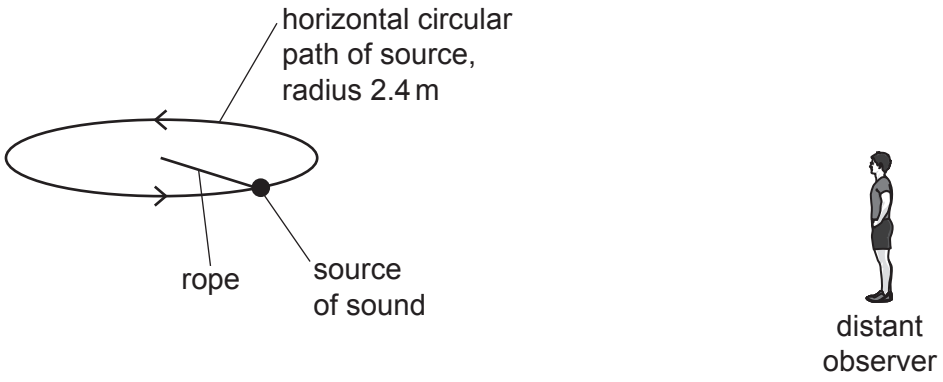

Fig. 5.1 (not to scale)

The source moves with a speed of 12.0 m s^{-1} and emits sound of frequency 951 Hz. The speed of the sound in the air is 330 m s^{-1}. An observer, standing a very long distance away from the source, hears the sound.

(a) Calculate the minimum frequency, to three significant figures, of the sound heard by the observer.

minimum frequency = ... Hz [2]

(b) The circular path of the source has a radius of 2.4 m.

Determine the shortest time interval between the observer hearing sound of minimum frequency and the observer hearing sound of maximum frequency.

time interval = ... s [2]

[Total: 4]

© UCLES 2021

GradeMax

BLANK PAGE

6 **(a)** State Kirchhoff's first law.

.....

..... [1]

(b) A battery of electromotive force (e.m.f.) 12.0 V and internal resistance r is connected to a filament lamp and a resistor, as shown in Fig. 6.1.

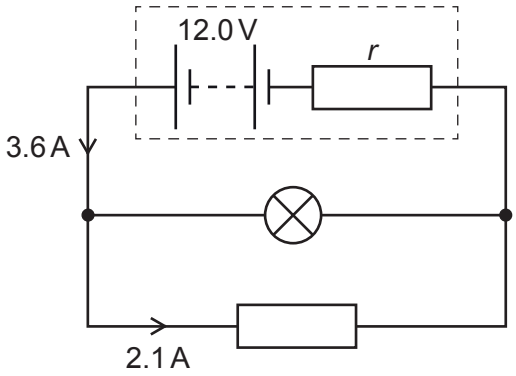

Fig. 6.1

The current in the battery is 3.6 A and the current in the resistor is 2.1 A. The I-V characteristic for the lamp is shown in Fig. 6.2.

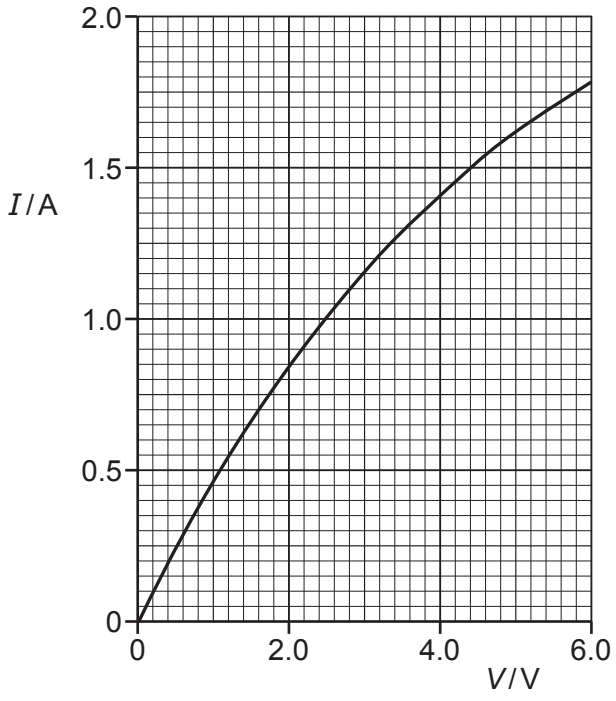

Fig. 6.2

© UCLES 2021

(i) Determine the resistance of the lamp in Fig. 6.1.

resistance = ... Ω [3]

(ii) Determine the internal resistance *r* of the battery.

r = ... Ω [2]

(iii) The initial energy stored in the battery is 470 kJ. Assume that the e.m.f. and the current in the battery do not change with time.

Calculate the time taken for the energy stored in the battery to become 240 kJ.

time = ... s [2]

© UCLES 2021

(iv) The filament wire of the lamp is connected in series with the adjacent copper connecting wire of the circuit, as illustrated in Fig. 6.3.

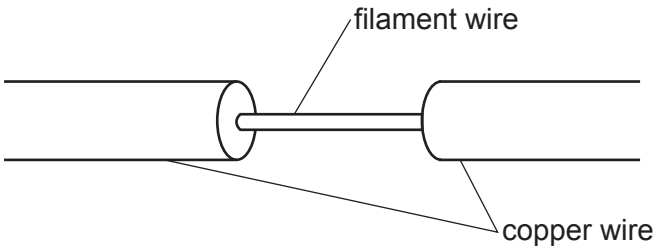

Fig. 6.3 (not to scale)

Some data for the filament wire and the adjacent copper connecting wire are given in Table 6.1.

Table 6.1

	filament wire	copper wire
cross-sectional area	A	$360A$
number density of free electrons	n	$2.5n$

Calculate the ratio

$$\frac{\text{average drift speed of free electrons in filament wire}}{\text{average drift speed of free electrons in copper wire}}.$$

ratio = ... [2]

[Total: 10]

© UCLES 2021

GradeMax

7 **(a)** The results of the α-particle scattering experiment provide evidence for the structure of the atom.

Result 1: The vast majority of the α-particles pass straight through the metal foil or are deviated by small angles.

Result 2: A very small minority of α-particles is scattered through angles greater than 90°.

State what may be inferred (deduced) from:

(i) result 1

.....

..... [1]

(ii) result 2.

.....

.....

..... [2]

(b) A radioactive decay sequence contains four nuclei, P, Q, R and S, as shown.

$$^{218}_{84}\text{P} \rightarrow {}^{214}_{82}\text{Q} \rightarrow {}^{214}_{83}\text{R} \rightarrow \text{S}$$

Nucleus S is an isotope of nucleus P.

(i) Determine the proton number and the nucleon number of nucleus S.

proton number = ...

nucleon number = ...
[2]

(ii) The quark composition of a nucleon in Q changes as Q decays to form R.

Describe this change to the quark composition of the nucleon.

.....

..... [1]

[Total: 6]

© UCLES 2021

GradeMax

BLANK PAGE

Permission to reproduce items where third-party owned material protected by copyright is included has been sought and cleared where possible. Every reasonable effort has been made by the publisher (UCLES) to trace copyright holders, but if any items requiring clearance have unwittingly been included, the publisher will be pleased to make amends at the earliest possible opportunity.

To avoid the issue of disclosure of answer-related information to candidates, all copyright acknowledgements are reproduced online in the Cambridge Assessment International Education Copyright Acknowledgements Booklet. This is produced for each series of examinations and is freely available to download at www.cambridgeinternational.org after the live examination series.

Cambridge Assessment International Education is part of the Cambridge Assessment Group. Cambridge Assessment is the brand name of the University of Cambridge Local Examinations Syndicate (UCLES), which itself is a department of the University of Cambridge.

© UCLES 2021