GradeMax

Cambridge Assessment International Education

Cambridge International AS & A Level

CANDIDATE NAME

CENTRE NUMBER | | | | | |

CANDIDATE NUMBER | | | | |

5251990380

PHYSICS **9702/22**

Paper 2 AS Level Structured Questions **February/March 2022**

1 hour 15 minutes

You must answer on the question paper.

No additional materials are needed.

INSTRUCTIONS

- Answer **all** questions.
- Use a black or dark blue pen. You may use an HB pencil for any diagrams or graphs.
- Write your name, centre number and candidate number in the boxes at the top of the page.
- Write your answer to each question in the space provided.
- Do **not** use an erasable pen or correction fluid.
- Do **not** write on any bar codes.
- You may use a calculator.
- You should show all your working and use appropriate units.

INFORMATION

- The total mark for this paper is 60.
- The number of marks for each question or part question is shown in brackets [ ].

This document has **20** pages. Any blank pages are indicated.

© UCLES 2022

[Turn over

GradeMax

Data

acceleration of free fall	g	=	$9.81\ \text{m s}^{-2}$
speed of light in free space	c	=	$3.00 \times 10^{8}\ \text{m s}^{-1}$
elementary charge	e	=	$1.60 \times 10^{-19}\ \text{C}$
unified atomic mass unit	1 u	=	$1.66 \times 10^{-27}\ \text{kg}$
rest mass of proton	m_p	=	$1.67 \times 10^{-27}\ \text{kg}$
rest mass of electron	m_e	=	$9.11 \times 10^{-31}\ \text{kg}$
Avogadro constant	N_A	=	$6.02 \times 10^{23}\ \text{mol}^{-1}$
molar gas constant	R	=	$8.31\ \text{J K}^{-1}\ \text{mol}^{-1}$
Boltzmann constant	k	=	$1.38 \times 10^{-23}\ \text{J K}^{-1}$
gravitational constant	G	=	$6.67 \times 10^{-11}\ \text{N m}^2\ \text{kg}^{-2}$
permittivity of free space	ε_0	=	$8.85 \times 10^{-12}\ \text{F m}^{-1}$
	$\left(\frac{1}{4\pi\varepsilon_0}\right.$	=	$\left.8.99 \times 10^{9}\ \text{m F}^{-1}\right)$
Planck constant	h	=	$6.63 \times 10^{-34}\ \text{J s}$
Stefan–Boltzmann constant	σ	=	$5.67 \times 10^{-8}\ \text{W m}^{-2}\ \text{K}^{-4}$

Formulae

uniformly accelerated motion	s	=	$ut + \frac{1}{2}at^2$
	v^2	=	$u^2 + 2as$
hydrostatic pressure	Δp	=	$\rho g \Delta h$
upthrust	F	=	$\rho g V$
Doppler effect for sound waves	f_o	=	$\frac{f_\text{s} v}{v \pm v_\text{s}}$
electric current	I	=	$Anvq$
resistors in series	R	=	$R_1 + R_2 + \ldots$
resistors in parallel	$\frac{1}{R}$	=	$\frac{1}{R_1} + \frac{1}{R_2} + \ldots$

© UCLES 2022

GradeMax

BLANK PAGE

GradeMax

1 A sphere of radius 2.1 mm falls with terminal (constant) velocity through a liquid, as shown in Fig. 1.1.

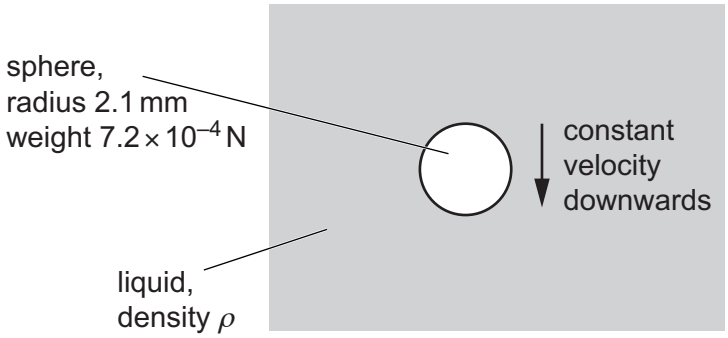

Fig. 1.1

Three forces act on the moving sphere. The weight of the sphere is 7.2×10^{-4} N and the upthrust acting on it is 4.8×10^{-4} N. The viscous force F_V acting on the sphere is given by

$$F_V = krv$$

where r is the radius of the sphere, v is its velocity and k is a constant. The value of k in SI units is 17.

(a) Determine the SI base units of k.

SI base units ..... [2]

(b) Use the value of the upthrust acting on the sphere to calculate the density ρ of the liquid.

ρ = ... kg m^{-3} [3]

© UCLES 2022

GradeMax

(c) (i) On the sphere in Fig. 1.1, draw three arrows to show the directions of the weight W, the upthrust U and the viscous force F_V. Label these arrows W, U and F_V respectively. [1]

(ii) Determine the magnitude of the terminal (constant) velocity of the sphere.

velocity = ... $m\,s^{-1}$ [2]

[Total: 8]

© UCLES 2022

[Turn over

2 Water leaves the end of a hose pipe at point P with a horizontal velocity of $6.6\,m\,s^{-1}$, as shown in Fig. 2.1.

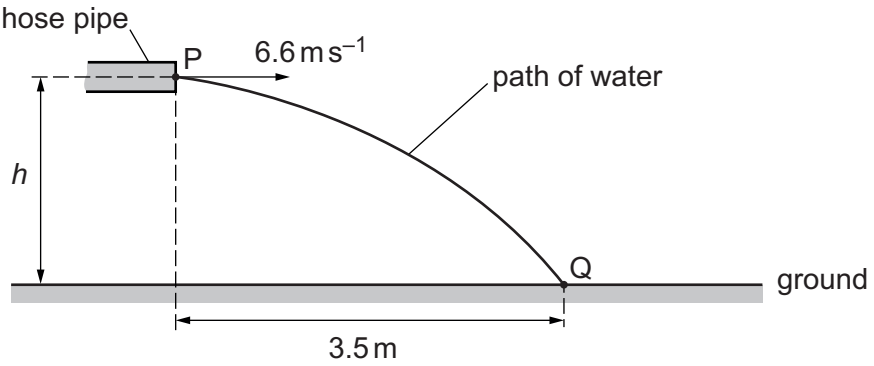

Fig. 2.1 (not to scale)

Point P is at height *h* above the ground. The water hits the ground at point Q. The horizontal distance from P to Q is 3.5 m.

Air resistance is negligible. Assume that the water between P and Q consists of non-interacting droplets of water and that the only force acting on each droplet is its weight.

(a) Explain, briefly, why the horizontal component of the velocity of a droplet of water remains constant as it moves from P to Q.

.....

..... [1]

(b) Show that the time taken for a droplet of water to move from P to Q is 0.53 s.

[1]

(c) Calculate height *h*.

h = ... m [2]

© UCLES 2022

(d) For the movement of a droplet of water from P to Q, state and explain whether the displacement of the droplet is less than, more than or the same as the distance along its path.

.....

.....

..... [1]

(e) Calculate the magnitude of the displacement of a droplet of water that moves from P to Q.

displacement = ... m [2]

[Total: 7]

GradeMax

3 A jet of water hits a vertical wall at right angles, as shown in Fig. 3.1.

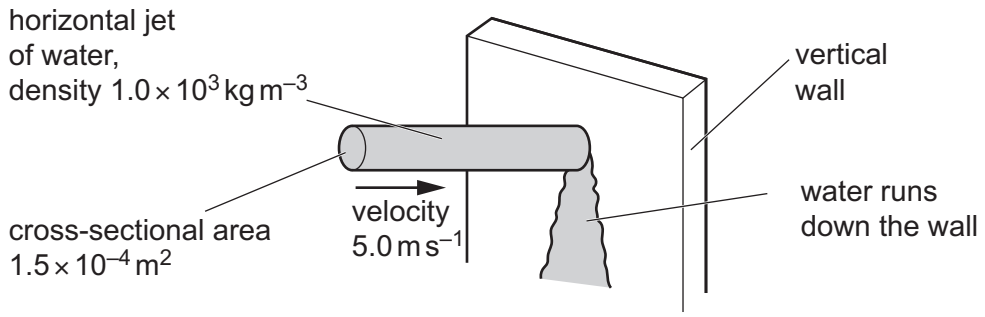

Fig. 3.1 (not to scale)

The water hits the vertical wall with a velocity of 5.0 m s^{-1} in a horizontal direction. The cross-sectional area of the jet is 1.5×10^{-4} m^2. The density of the water is 1.0×10^3 kg m^{-3}.

The water runs down the wall after hitting it.

(a) Show that, over a time of 1.6 s, the mass of water hitting the wall is 1.2 kg.

[2]

(b) Calculate:

(i) the decrease in the horizontal momentum of the mass of water in **(a)** due to hitting the wall

decrease in momentum = ... N s [1]

(ii) the magnitude of the horizontal force exerted on the water by the wall.

force = ... N [1]

© UCLES 2022

GradeMax

(c) State and explain the magnitude of the horizontal force exerted on the wall by the water.

.....

..... [1]

(d) Calculate the pressure exerted on the wall by the water.

pressure = ... Pa [2]

[Total: 7]

GradeMax

4 A child moves down a long slide, as shown in Fig. 4.1.

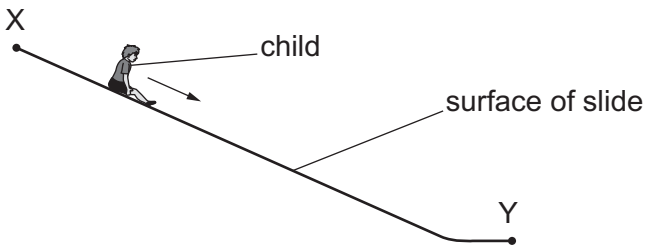

Fig. 4.1 (not to scale)

The child moves from rest at the top end X of the slide. An average resistive force of 76 N opposes the motion of the child as they move to the lower end Y of the slide. The kinetic energy of the child at Y is 300 J. The decrease in gravitational potential energy of the child as it moves from X to Y is 3200 J.

(a) Determine the ratio

$$\frac{\text{kinetic energy of the child at Y when the resistive force is 76 N}}{\text{kinetic energy of the child at Y if there is no resistive force}}.$$

ratio = ... [1]

(b) Use the answer in **(a)** to calculate the ratio

$$\frac{\text{speed of the child at Y when the resistive force is 76 N}}{\text{speed of the child at Y if there is no resistive force}}.$$

ratio = ... [2]

(c) Calculate the length of the slide from X to Y.

length = ... m [2]

© UCLES 2022

GradeMax

(d) At end Y of the slide, the child is brought to rest by a board, as shown in Fig. 4.2.

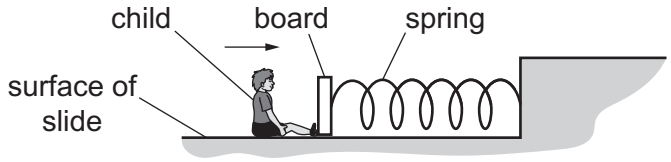

Fig. 4.2 (not to scale)

A spring connects the board to a fixed point. The spring obeys Hooke's law and has a spring constant of $63\,N\,m^{-1}$. The child hits the board so that it moves to the right and compresses the spring. The speed of the child becomes zero when the elastic potential energy of the spring has increased to its maximum value of 140 J.

(i) Calculate the maximum compression of the spring.

maximum compression = ... m [2]

(ii) Calculate the percentage efficiency of the transfer of the kinetic energy of the child to the elastic potential energy of the spring.

percentage efficiency = ... % [1]

(iii) The maximum compression of the spring is x_0. On Fig. 4.3, sketch a graph to show the variation of the elastic potential energy of the spring with its compression x from $x = 0$ to $x = x_0$. Numerical values are not required.

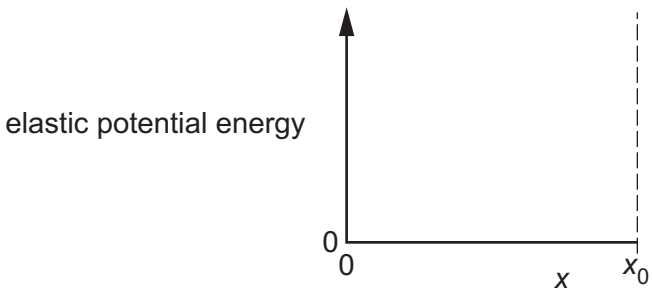

Fig. 4.3

[2]

[Total: 10]

© UCLES 2022

[Turn over

5 **(a)** **(i)** State the conditions required for the formation of a stationary wave.

.....

.....

.....

..... [2]

(ii) State the phase difference between any two vibrating particles in a stationary wave between two adjacent nodes.

phase difference = ...° [1]

(b) A motorcycle is travelling at 13.0 m s^{-1} along a straight road. The rider of the motorcycle sees a pedestrian standing in the road directly ahead and operates a horn to emit a warning sound. The pedestrian hears the warning sound from the horn at a frequency of 543 Hz. The speed of the sound in the air is 334 m s^{-1}.

(i) Calculate the frequency, to three significant figures, of the sound emitted by the horn.

frequency = ... Hz [2]

(ii) The motorcycle rider passes the stationary pedestrian and then moves directly away from her. As the rider moves away, he operates the horn for a second time. The pedestrian now hears sound that is increasing in frequency.

State the variation, if any, in the speed of the motorcycle when the rider operates the horn for the second time.

..... [1]

© UCLES 2022

GradeMax

(c) A beam of vertically polarised monochromatic light is incident normally on a polarising filter, as shown in Fig. 5.1.

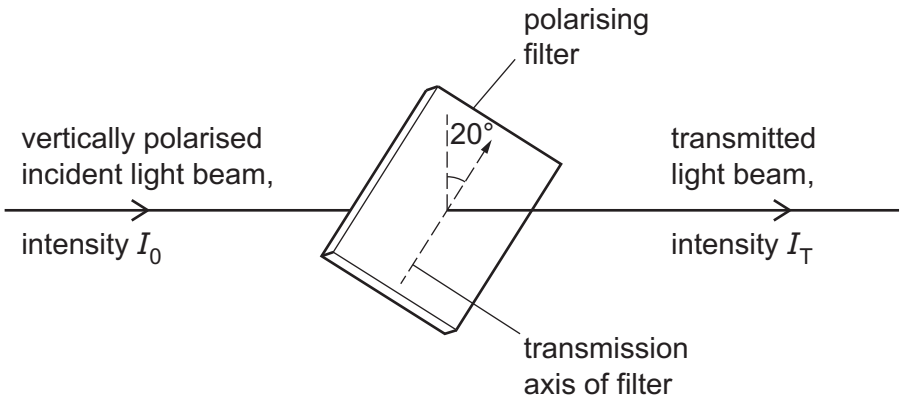

Fig. 5.1

The filter is positioned with its transmission axis at an angle of 20° to the vertical. The incident light has intensity I_0 and the transmitted light has intensity I_T.

(i) By considering the ratio $\frac{I_T}{I_0}$, calculate the ratio

$$\frac{\text{amplitude of transmitted light}}{\text{amplitude of incident light}}.$$

Show your working.

ratio = ... [3]

(ii) The filter is now rotated, about the direction of the light beam, from its starting position shown in Fig. 5.1. The direction of rotation is such that the angle of the transmission axis to the vertical initially increases.

Calculate the minimum angle through which the filter must be rotated so that the intensity of the transmitted light returns to the value that it had when the filter was at its starting position.

angle = ... ° [1]

[Total: 10]

© UCLES 2022

[Turn over

6 The ends of a metal resistance wire are connected to a battery of electromotive force (e.m.f.) 8.0 V and negligible internal resistance, as shown in Fig. 6.1.

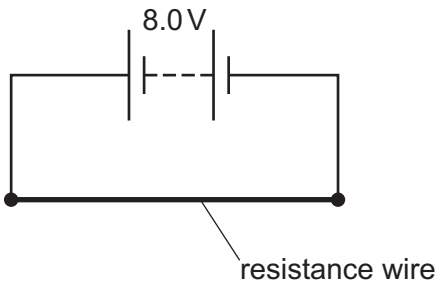

Fig. 6.1

The power dissipated by the resistance wire is 36 W.

(a) Calculate:

(i) the current in the resistance wire

current = ...A [2]

(ii) the number of free electrons that pass through the resistance wire in a time of 50 s

number = ... [2]

(iii) the resistance of the wire.

resistance = ... Ω [2]

© UCLES 2022

(b) The metal of the resistance wire in the circuit has a resistivity of $1.4 \times 10^{-6}\,\Omega\,\text{m}$. The cross-sectional area of the wire is $0.25\,\text{mm}^2$.

Determine the length of the wire.

length = ... m [2]

(c) The circuit shown in Fig. 6.1 is modified by replacing the original resistance wire with a second resistance wire. The second wire has a greater diameter than the original wire. There are no other differences between the second wire and the original wire.

By reference to resistance, state and explain whether the power dissipated by the second wire is more than, less than or the same as the power dissipated by the original wire.

.....

.....

.....

..... [2]

© UCLES 2022

(d) The circuit shown in Fig. 6.1 is modified by connecting a second battery, of e.m.f. 8.0 V and negligible internal resistance, in parallel with the original battery and the original resistance wire, as shown in Fig. 6.2.

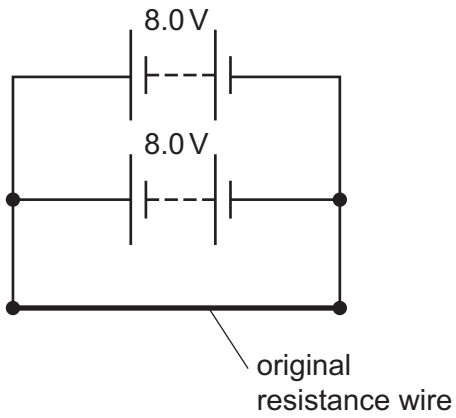

Fig. 6.2

By reference to the current in the resistance wire, state and explain whether the addition of the second battery causes the power in the original resistance wire to decrease, increase or stay the same.

.....

.....

.....

..... [2]

[Total: 12]

© UCLES 2022

GradeMax

7 **(a)** A nucleus of sodium-22 ($^{22}_{11}$Na) decays by emitting a β^+ particle. A different nucleus is formed by the decay.

(i) State the name of another lepton that is produced by the decay.

..... [1]

(ii) Determine the nucleon number and the proton number of the nucleus that is formed by the decay.

nucleon number = ...

proton number = ...
[2]

(iii) The quark composition of a nucleon in the sodium-22 nucleus is changed during the decay.

Describe the change to the quark composition of the nucleon.

.....

..... [1]

(b) A baryon consists of quarks that are the same flavour (type). The charge of the baryon is –2*e*, where *e* is the elementary charge.

(i) Calculate, in terms of *e*, the charge of each quark.

charge = ... *e* [1]

(ii) State a possible flavour (type) of the quarks.

..... [1]

[Total: 6]

© UCLES 2022

GradeMax

BLANK PAGE

© UCLES 2022

GradeMax

BLANK PAGE

© UCLES 2022

GradeMax

BLANK PAGE

Permission to reproduce items where third-party owned material protected by copyright is included has been sought and cleared where possible. Every reasonable effort has been made by the publisher (UCLES) to trace copyright holders, but if any items requiring clearance have unwittingly been included, the publisher will be pleased to make amends at the earliest possible opportunity.

To avoid the issue of disclosure of answer-related information to candidates, all copyright acknowledgements are reproduced online in the Cambridge Assessment International Education Copyright Acknowledgements Booklet. This is produced for each series of examinations and is freely available to download at www.cambridgeinternational.org after the live examination series.

Cambridge Assessment International Education is part of Cambridge Assessment. Cambridge Assessment is the brand name of the University of Cambridge Local Examinations Syndicate (UCLES), which is a department of the University of Cambridge.

© UCLES 2022