GradeMax

Cambridge Assessment International Education

Cambridge International AS & A Level

PHYSICS **9702/12**

Paper 1 Multiple Choice **February/March 2025**

1 hour 15 minutes

You must answer on the multiple choice answer sheet.

You will need: Multiple choice answer sheet
Soft clean eraser
Soft pencil (type B or HB is recommended)

INSTRUCTIONS

- There are **forty** questions on this paper. Answer **all** questions.
- For each question there are four possible answers **A**, **B**, **C** and **D**. Choose the **one** you consider correct and record your choice in soft pencil on the multiple choice answer sheet.
- Follow the instructions on the multiple choice answer sheet.
- Write in soft pencil.
- Write your name, centre number and candidate number on the multiple choice answer sheet in the spaces provided unless this has been done for you.
- Do **not** use correction fluid.
- Do **not** write on any bar codes.
- You may use a calculator.

INFORMATION

- The total mark for this paper is 40.
- Each correct answer will score one mark.
- Any rough working should be done on this question paper.

This document has **16** pages.

© UCLES 2025

[Turn over

Data

acceleration of free fall	$g = 9.81\,\text{m s}^{-2}$
speed of light in free space	$c = 3.00 \times 10^{8}\,\text{m s}^{-1}$
elementary charge	$e = 1.60 \times 10^{-19}\,\text{C}$
unified atomic mass unit	$1\,\text{u} = 1.66 \times 10^{-27}\,\text{kg}$
rest mass of proton	$m_\text{p} = 1.67 \times 10^{-27}\,\text{kg}$
rest mass of electron	$m_\text{e} = 9.11 \times 10^{-31}\,\text{kg}$
Avogadro constant	$N_\text{A} = 6.02 \times 10^{23}\,\text{mol}^{-1}$
molar gas constant	$R = 8.31\,\text{J K}^{-1}\,\text{mol}^{-1}$
Boltzmann constant	$k = 1.38 \times 10^{-23}\,\text{J K}^{-1}$
gravitational constant	$G = 6.67 \times 10^{-11}\,\text{N m}^2\,\text{kg}^{-2}$
permittivity of free space	$\varepsilon_0 = 8.85 \times 10^{-12}\,\text{F m}^{-1}$ $\left(\frac{1}{4\pi\varepsilon_0} = 8.99 \times 10^{9}\,\text{m F}^{-1}\right)$
Planck constant	$h = 6.63 \times 10^{-34}\,\text{J s}$
Stefan–Boltzmann constant	$\sigma = 5.67 \times 10^{-8}\,\text{W m}^{-2}\,\text{K}^{-4}$

Formulae

uniformly accelerated motion	$s = ut + \frac{1}{2}at^2$ $v^2 = u^2 + 2as$
hydrostatic pressure	$\Delta p = \rho g \Delta h$
upthrust	$F = \rho g V$
Doppler effect for sound waves	$f_\text{o} = \frac{f_\text{s} v}{v \pm v_\text{s}}$
electric current	$I = Anvq$
resistors in series	$R = R_1 + R_2 + ...$
resistors in parallel	$\frac{1}{R} = \frac{1}{R_1} + \frac{1}{R_2} + ...$

© UCLES 2025

GradeMax

1 Which quantity is a scalar quantity?

A force

B momentum

C velocity

D work

2 What is the effect of a systematic error on the measurement of a physical quantity?

A It limits the precision of the measured value.

B It limits the range of values obtained in repeated measurements.

C It results in repeated measurements having different values from each other.

D It results in the measured value being different from the correct value.

3 A car is accelerated by a constant resultant force of 300 N for 5.0 s.

The variation with time of the velocity, in $cm\,s^{-1}$, of the car is shown.

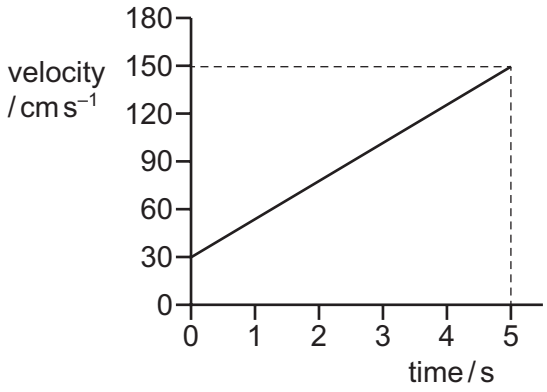

What is the mass of the car?

A 13 kg **B** 1000 kg **C** 1300 kg **D** 10 000 kg

4 An aircraft, initially stationary on a runway, takes off with a speed of $85\,km\,h^{-1}$ in a distance of no more than 1.20 km.

What is the minimum constant acceleration necessary for the aircraft?

A $0.23\,m\,s^{-2}$ **B** $0.46\,m\,s^{-2}$ **C** $3.0\,m\,s^{-2}$ **D** $6.0\,m\,s^{-2}$

© UCLES 2025

[Turn over

5 An object is fired upwards from horizontal ground. The object has an initial velocity of $20\,m\,s^{-1}$ at an angle of 45° to the horizontal. Air resistance is negligible.

Which statement describes the speed of the object after it is fired until immediately before it reaches the ground again?

A Its speed decreases to a value greater than zero, then increases to $20\,m\,s^{-1}$.

B Its speed decreases to a value greater than zero, then increases to a value greater than $20\,m\,s^{-1}$.

C Its speed decreases to zero, then increases to $20\,m\,s^{-1}$.

D Its speed decreases to zero, then increases to a value less than $20\,m\,s^{-1}$.

6 What is a statement of the principle of conservation of momentum for a system?

A The total momentum and the total kinetic energy are always conserved.

B The total momentum is conserved only in elastic collisions.

C The total momentum is conserved provided that no external forces act.

D The total momentum of each object in the system is the product of its mass and velocity.

7 Objects P and Q form an isolated system.

Object P has mass 6.0 kg and is moving at a speed of $3.0\,m\,s^{-1}$.

Object Q has mass 2.0 kg and is moving at a speed of $4.2\,m\,s^{-1}$ at an angle of 35° to the path of P.

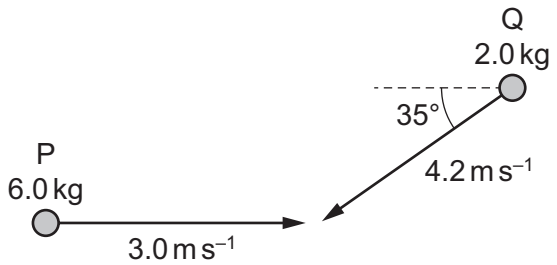

Objects P and Q collide and stick together.

What is the magnitude of the component of the final momentum of the combined objects in the original direction of P?

A $9.6\,kg\,m\,s^{-1}$ **B** $11\,kg\,m\,s^{-1}$ **C** $13\,kg\,m\,s^{-1}$ **D** $25\,kg\,m\,s^{-1}$

GradeMax

8 An astronaut of mass m in a spacecraft experiences a gravitational force $F = mg$ when stationary on the launchpad.

What is the gravitational force on the astronaut when the spacecraft is launched vertically upwards with an acceleration of $0.2g$?

A $1.2mg$ **B** mg **C** $0.8mg$ **D** 0

9 The diagram shows a child X of mass 20 kg and a child Y of mass 15 kg seated on a uniform plank.

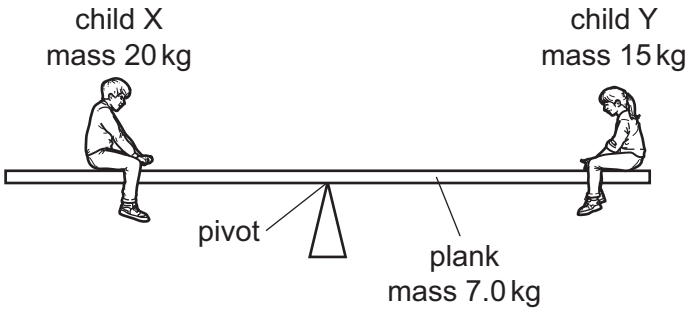

The plank has a mass of 7.0 kg and has a pivot at its midpoint. The plank is horizontal and in equilibrium.

Which statement about the weight of the plank is correct?

A The weight of the plank can be considered to be acting at its midpoint.

B The weight of the plank is causing an anticlockwise moment.

C The weight of the plank is causing a clockwise moment.

D The weight of the plank equals the force on the plank from the pivot.

10 An object is fully submerged in a liquid.

A student determines the ratio $\frac{\text{upthrust acting on the object}}{\text{weight of the object}}$.

Which single change would double the value of this ratio?

A Use a different liquid that has twice the density and the same volume as the original liquid.

B Use a different object that has half the volume and the same density as the original object.

C Use a different object that has twice the density and the same volume as the original object.

D Use a different object that has twice the volume and the same density as the original object.

© UCLES 2025

11 A shop sign weighing 75 N hangs from a frame attached to a vertical wall.

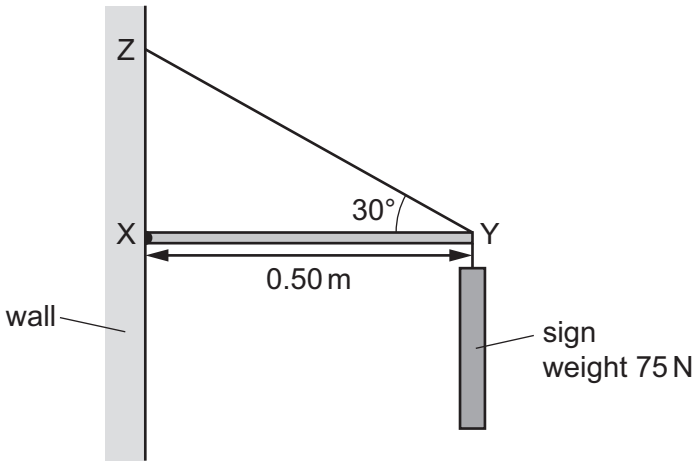

The frame consists of a horizontal rod XY and a rod YZ that is at an angle of 30° to the horizontal. Rod XY is attached to the wall by a hinge at X and has length 0.50 m. Assume that the weights of the rods are negligible.

What is the horizontal force exerted by the wall on rod XY?

A 0 N **B** 43 N **C** 130 N **D** 150 N

12 A student takes measurements to calculate the density of a liquid in a beaker.

The height of the liquid in the beaker is 0.20 m ± 2%.

The internal diameter of the beaker is 0.05 m ± 3%.

The mass of the liquid is 0.36 kg ± 10%.

What is the percentage uncertainty in the calculated density of the liquid?

A 2% **B** 5% **C** 15% **D** 18%

© UCLES 2025

GradeMax

13 The diagram shows a uniform plank XY of length 4.0 m and weight 300 N.

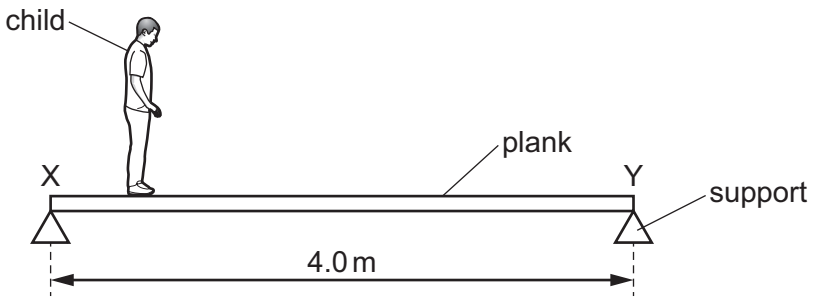

The plank rests on fixed supports at its ends X and Y.

A child of weight 600 N stands in different positions on the plank.

The support at end X exerts a force *F* vertically upwards on the plank.

What is the magnitude of *F* when the child stands at X and when the child stands at Y?

	F / N when child is at X	*F* / N when child is at Y
A	600	0
B	600	150
C	750	0
D	750	150

14 Which relationship is used in the derivation of the equation shown?

$$\text{power} = \text{force} \times \text{velocity}$$

A displacement = velocity × time

B force = mass × acceleration

C momentum = mass × velocity

D velocity = acceleration × time

© UCLES 2025

[Turn over

GradeMax

15 A block is released from rest at the top of a slope inclined at an angle to the horizontal. The slope has length L as shown in the diagram.

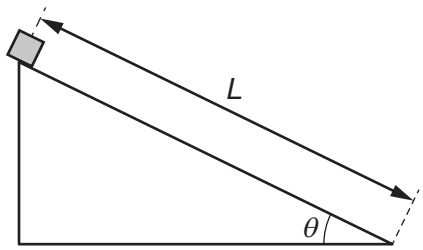

There are no resistive forces acting on the block.

What is the speed of the block at the bottom of the slope?

A $4.43\sqrt{L\cos\theta}$ **B** $4.43\sqrt{L\sin\theta}$ **C** $19.6L\cos\theta$ **D** $19.6L\sin\theta$

16 A skateboarder and her skateboard have a total mass of 70 kg. She pushes on the ground with her foot to create a forward force F of 25 N on herself and the skateboard, as shown in the diagram.

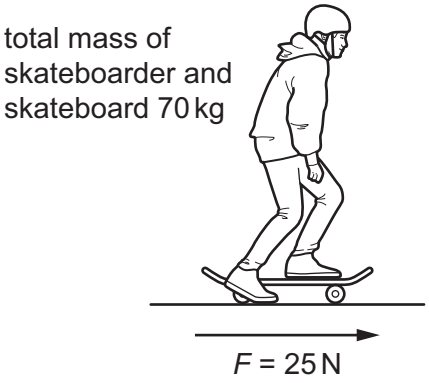

The skateboarder and skateboard travel forwards a distance of 0.50 m before the skateboarder lifts her foot from the ground.

What is the work done by F on the skateboarder and skateboard?

A 13 J **B** 50 J **C** 340 J **D** 360 J

17 A turbine at a hydroelectric power station is situated at a vertical distance of 30 m below the level of the surface of a large lake. The water passes through the turbine at a rate of 340 m^3 per minute.

The overall efficiency of the turbine and generator system is 90%. The density of water is 1000 $kg\,m^{-3}$.

What is the useful power output of the power station?

A 0.15 MW **B** 1.5 MW **C** 1.7 MW **D** 90 MW

© UCLES 2025

GradeMax

18 A projectile is launched at 45° to the horizontal with initial kinetic energy E.

Assuming air resistance to be negligible, what will be the kinetic energy of the projectile when it reaches its highest point?

A 0.50E **B** 0.71E **C** 0.87E **D** E

19 A wire is extended by a tensile force so that its deformation is elastic.

What is meant by elastic deformation?

A The extension of the wire is proportional to the tensile force.

B The extension of the wire is **not** proportional to the tensile force.

C When the tensile force is removed, the wire does **not** return to its original length.

D When the tensile force is removed, the wire returns to its original length.

20 A bolt is subjected to a tensile force, as shown.

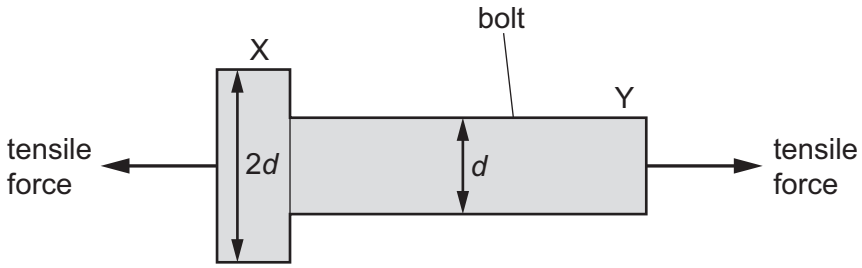

The bolt has a circular cross-section. At end X, the diameter is 2d. At end Y, the diameter is d.

What is the ratio $\frac{\text{stress at Y}}{\text{stress at X}}$?

A 0.25 **B** 0.50 **C** 2.0 **D** 4.0

© UCLES 2025

[Turn over

21 The graph shows the relationship between force acting on a compression spring and change in length of the spring.

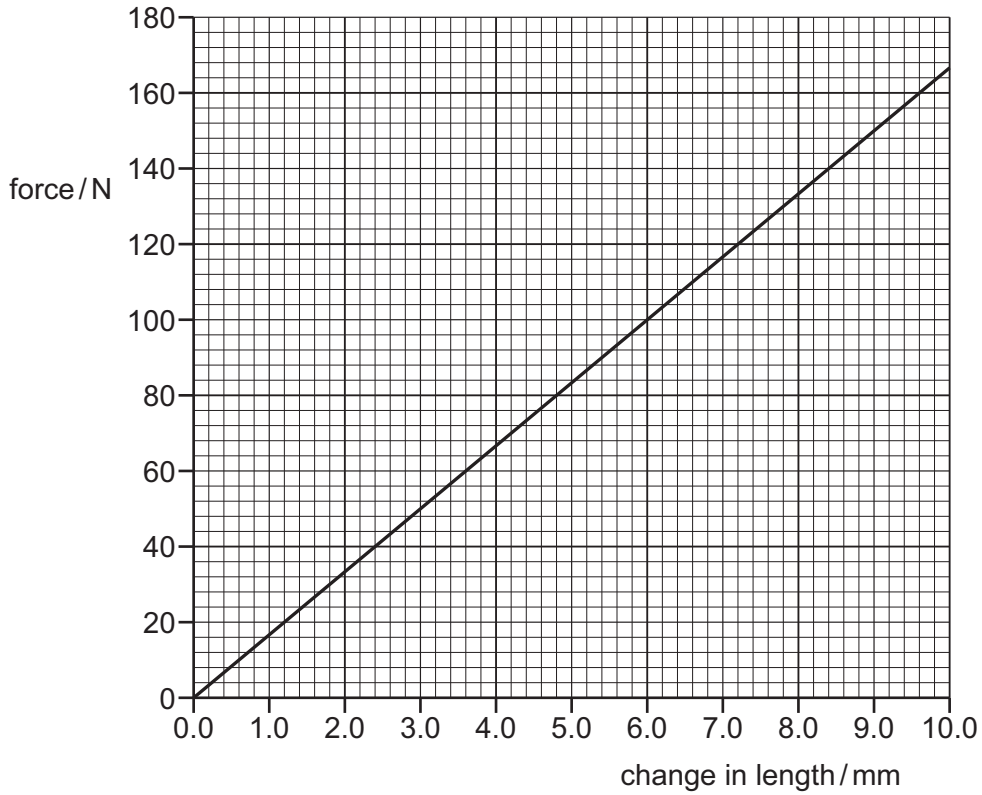

One of these springs is placed in each corner of a horizontal square plate. The axis of each spring is in a vertical direction. These four springs support a total load of 160 N.

What is the total elastic potential energy stored in the four springs?

A 0.048 J **B** 0.19 J **C** 0.38 J **D** 0.77 J

22 Which row correctly identifies the properties of all electromagnetic waves?

	transverse wave	longitudinal wave	can travel in free space
A	✓	✗	✓
B	✓	✗	✗
C	✗	✓	✓
D	✗	✓	✗

key

✓ = property of an electromagnetic wave

✗ = **not** a property of an electromagnetic wave

23 What is the approximate range of wavelengths in free space for infrared radiation?

A 100 nm to 400 nm

B 300 μm to 30 cm

C 400 nm to 700 nm

D 800 nm to 1000 μm

24 The diagram shows a car travelling at a constant speed in a straight line between person P and person Q from point X to point Y.

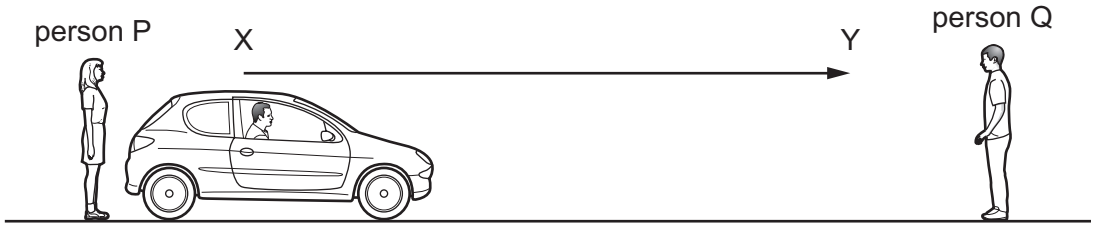

The car sounds its horn continuously as it travels. The horn emits sound of constant frequency.

Which statements about what person P and person Q hear during the motion of the car are correct?

1 Person P hears a sound of increasing frequency.

2 Person Q hears a sound of decreasing frequency.

3 Person Q always hears a sound of higher frequency than person P.

A 1, 2 and 3

B 1 and 2 only

C 3 only

D none of them

25 A progressive wave of frequency 300 Hz is travelling with a speed of 600 m s^{-1}.

What is the phase difference between two points on the wave that are a distance of 0.50 m apart?

A 45° **B** 90° **C** 180° **D** 360°

GradeMax

26 A polarised beam of light with intensity I is incident normally on a polarising filter.

The transmitted light has intensity I.

The filter is rotated about the normal axis through an angle θ.

The transmitted light has intensity $0.75I$.

What is the angle θ?

A 30° **B** 42° **C** 49° **D** 60°

27 Light waves are emitted from two sources.

What is a necessary condition for observable interference fringes to be produced?

A The waves must be polarised.

B The waves must **not** be polarised.

C The waves must be coherent.

D The waves must have equal amplitudes.

28 The diagram shows a water wave in a shallow tank. The wave is diffracted through a gap in a barrier and spreads. The wavelength of the wave is much smaller than the width of the gap.

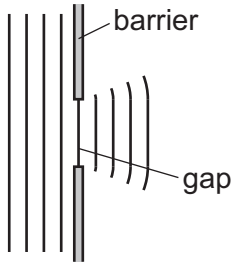

The wavelength of the wave and the width of the gap are both changed by a small amount.

Which combination of changes **must** increase the amount of spreading due to diffraction?

	wavelength	width of gap
A	decreases	decreases
B	decreases	increases
C	increases	decreases
D	increases	increases

© UCLES 2025

GradeMax

29 Light of wavelength 567 nm is incident normally on a diffraction grating. The grating has 400 lines per mm. A number of diffraction maxima are observed on the far side of the grating.

What is the angle between the second-order maximum and the third-order maximum?

A 13.1° **B** 13.9° **C** 15.9° **D** 27.0°

30 Two cylindrical conductors, X and Y, are made from the same material. The conductors have equal lengths, but Y has a smaller diameter than X.

X and Y are connected in series to a cell.

Which row compares the number of charge carriers per unit time passing through X and through Y and compares the average drift speed of the charge carriers in X and in Y?

	number of charge carriers per unit time	average drift speed of charge carriers
A	Y greater than X	Y greater than X
B	Y same as X	Y same as X
C	Y greater than X	Y same as X
D	Y same as X	Y greater than X

31 A copper wire is 6.4 m long and has a resistance of 0.92 Ω.

The resistivity of copper is $1.8 \times 10^{-8}\,\Omega\,\text{m}$.

What is the diameter of the wire?

A $5.7 \times 10^{-5}\,\text{m}$ **B** $1.0 \times 10^{-4}\,\text{m}$ **C** $4.0 \times 10^{-4}\,\text{m}$ **D** $7.1 \times 10^{-4}\,\text{m}$

© UCLES 2025

[Turn over

GradeMax

32 A thermistor is connected to a cell with negligible internal resistance.

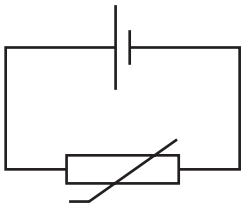

Which graph shows the variation with temperature of power, *P*, dissipated in the thermistor?

A

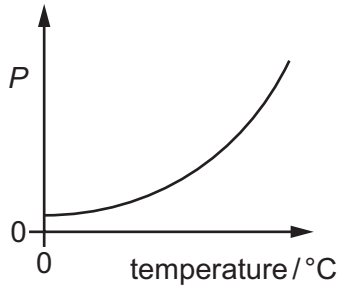

B

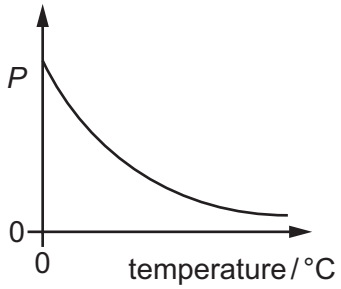

C

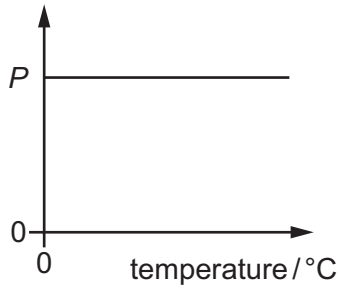

D

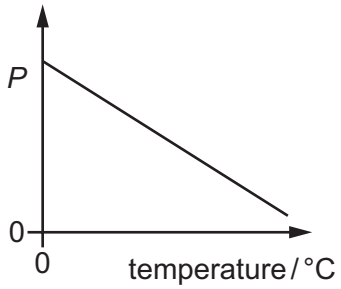

33 A metal electrical conductor has a resistance of 5.6 kΩ. A potential difference (p.d.) of 9.0 V is applied across its ends.

How many electrons pass a point in the conductor in one minute?

A 6.0×10^{20} **B** 1.0×10^{19} **C** 6.0×10^{17} **D** 1.0×10^{16}

34 Which circuit symbol does **not** represent an electric component that is designed to emit sound waves?

A



B

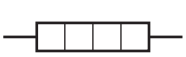

C



D



© UCLES 2025

GradeMax

35 The diagram shows a junction in a circuit where three wires, P, Q and R, meet. The currents in P and Q are 1 A and 3 A respectively, in the directions shown.

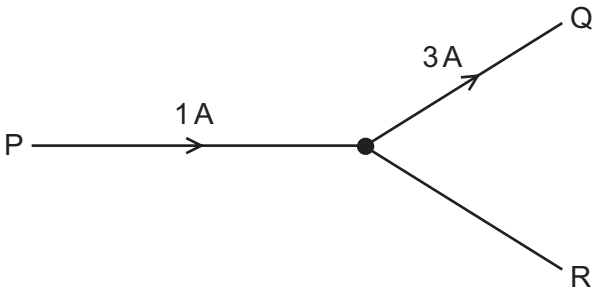

How much charge passes a given point in wire R in a time of 5 s?

A 0.4 C **B** 2 C **C** 10 C **D** 20 C

36 A cell of electromotive force (e.m.f.) *E* and internal resistance *r* is connected in series with a switch S and an external resistor of resistance *R*.

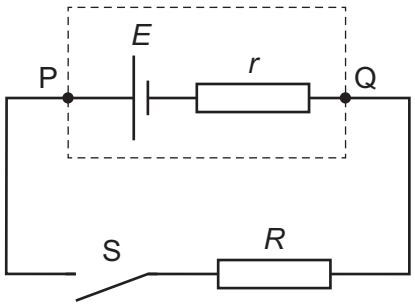

The potential difference (p.d.) between P and Q is *V*.

Which statement is correct when S is changed from open to closed?

A *V* increases because there is a p.d. across *R*.

B *V* decreases because there is a p.d. across *r*.

C *V* remains the same because the decrease of p.d. across *r* is balanced by the increase of p.d. across *R*.

D *V* remains the same because the sum of the p.d.s across *r* and *R* is still equal to *E*.

37 What is a general description of a baryon?

A It consists of three quarks that **must** all be the same flavour.

B It consists of three quarks that do **not** need to be the same flavour.

C It consists of two quarks that **must** both be the same flavour.

D It consists of two quarks that do **not** need to be the same flavour.

© UCLES 2025

GradeMax

38 A stationary nucleus has nucleon number A.

The nucleus decays by emitting a proton with speed v to form a new nucleus with speed u. The new nucleus and the proton move away from one another in opposite directions.

Which equation gives v in terms of A and u?

A $v = (\frac{A}{4} - 1)u$

B $v = (A - 1)u$

C $v = Au$

D $v = (A + 1)u$

39 What is the change to the quark composition of a nucleus that takes place during β^+ decay?

A down to antiup

B down to up

C up to antidown

D up to down

40 What is the charge, in terms of the elementary charge e, on a charm quark?

A $-\frac{2}{3}e$ **B** $-\frac{1}{3}e$ **C** $+\frac{1}{3}e$ **D** $+\frac{2}{3}e$

Permission to reproduce items where third-party owned material protected by copyright is included has been sought and cleared where possible. Every reasonable effort has been made by the publisher (UCLES) to trace copyright holders, but if any items requiring clearance have unwittingly been included, the publisher will be pleased to make amends at the earliest possible opportunity.

To avoid the issue of disclosure of answer-related information to candidates, all copyright acknowledgements are reproduced online in the Cambridge Assessment International Education Copyright Acknowledgements Booklet. This is produced for each series of examinations and is freely available to download at www.cambridgeinternational.org after the live examination series.

Cambridge Assessment International Education is part of Cambridge Assessment. Cambridge Assessment is the brand name of the University of Cambridge Local Examinations Syndicate (UCLES), which is a department of the University of Cambridge.

© UCLES 2025