GradeMax

CAMBRIDGE
International Education

Cambridge International AS & A Level

PHYSICS **9702/12**

Paper 1 Multiple Choice **February/March 2026**

1 hour 15 minutes

You must answer on the multiple choice answer sheet.

You will need: Multiple choice answer sheet
Soft clean eraser
Soft pencil (type B or HB is recommended)

INSTRUCTIONS

- There are **forty** questions on this paper. Answer **all** questions.
- For each question there are four possible answers **A**, **B**, **C** and **D**. Choose the **one** you consider correct and record your choice in soft pencil on the multiple choice answer sheet.
- Follow the instructions on the multiple choice answer sheet.
- Write in soft pencil.
- Write your name, centre number and candidate number on the multiple choice answer sheet in the spaces provided unless this has been done for you.
- Do **not** use correction fluid or tape.
- Do **not** write on any bar codes.
- You may use a calculator.

INFORMATION

- The total mark for this paper is 40.
- Each correct answer will score one mark.
- Any rough working should be done on this question paper.

This document has **20** pages. Any blank pages are indicated.

© Cambridge University Press & Assessment 2026
[Turn over

Data

acceleration of free fall	$g = 9.81\,\text{m s}^{-2}$
speed of light in free space	$c = 3.00 \times 10^{8}\,\text{m s}^{-1}$
elementary charge	$e = 1.60 \times 10^{-19}\,\text{C}$
unified atomic mass unit	$1\,\text{u} = 1.66 \times 10^{-27}\,\text{kg}$
rest mass of proton	$m_\text{p} = 1.67 \times 10^{-27}\,\text{kg}$
rest mass of electron	$m_\text{e} = 9.11 \times 10^{-31}\,\text{kg}$
Avogadro constant	$N_\text{A} = 6.02 \times 10^{23}\,\text{mol}^{-1}$
molar gas constant	$R = 8.31\,\text{J K}^{-1}\,\text{mol}^{-1}$
Boltzmann constant	$k = 1.38 \times 10^{-23}\,\text{J K}^{-1}$
gravitational constant	$G = 6.67 \times 10^{-11}\,\text{N m}^2\,\text{kg}^{-2}$
permittivity of free space	$\varepsilon_0 = 8.85 \times 10^{-12}\,\text{F m}^{-1}$ $\left(\frac{1}{4\pi\varepsilon_0} = 8.99 \times 10^{9}\,\text{m F}^{-1}\right)$
Planck constant	$h = 6.63 \times 10^{-34}\,\text{J s}$
Stefan–Boltzmann constant	$\sigma = 5.67 \times 10^{-8}\,\text{W m}^{-2}\,\text{K}^{-4}$

Formulae

uniformly accelerated motion	$s = ut + \frac{1}{2}at^2$ $v^2 = u^2 + 2as$
hydrostatic pressure	$\Delta p = \rho g \Delta h$
upthrust	$F = \rho g V$
Doppler effect for sound waves	$f_\text{o} = \frac{f_\text{s} v}{v \pm v_\text{s}}$
electric current	$I = Anvq$
resistors in series	$R = R_1 + R_2 + \ldots$
resistors in parallel	$\frac{1}{R} = \frac{1}{R_1} + \frac{1}{R_2} + \ldots$

© Cambridge University Press & Assessment 2026

GradeMax

1 What is the value of the ratio $\frac{1\text{km}}{1\text{nm}}$?

A 10^{-12} **B** 10^{-6} **C** 10^{9} **D** 10^{12}

2 What could reduce systematic errors?

A averaging a large number of measurements

B careful calibration of measuring instruments

C reducing the sample size

D repeating measurements

3 A student measures the current and the potential difference for a resistor in a circuit.

current = $(50.00 \pm 0.01)\,\text{mA}$

potential difference = $(500.0 \pm 0.1)\,\text{mV}$

The measurements are used to calculate the resistance of the resistor.

What is the percentage uncertainty in the calculated resistance?

A 0.0002% **B** 0.0004% **C** 0.02% **D** 0.04%

4 Graphs can be used to represent the motion of an object.

Which relationship between a quantity of motion and a property of a graph is correct?

A Acceleration is the area under a velocity–time graph.

B Acceleration is the gradient of a velocity–time graph.

C Displacement is the gradient of a velocity–time graph.

D Velocity is the area under a displacement–time graph.

5 The water surface in a deep well is 78.0 m below the top of the well.

A person at the top of the well drops a heavy stone down the well.

Air resistance is negligible. The speed of sound in the air is $330\,\text{m}\,\text{s}^{-1}$.

What is the time interval between the person dropping the stone and hearing it hitting the water?

A 3.75 s **B** 3.99 s **C** 4.19 s **D** 4.22 s

© Cambridge University Press & Assessment 2026

6 A toy car moves in a straight line.

The graph shows the variation with time of the displacement of the car from its initial position.

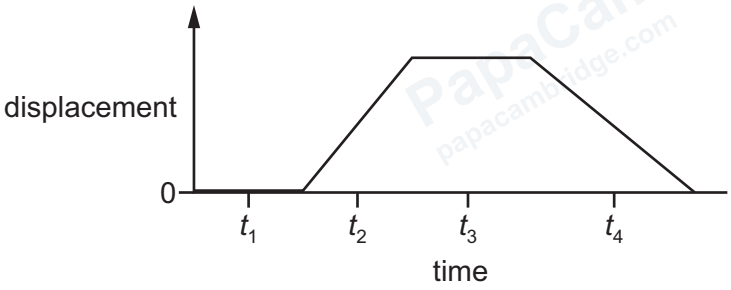

A student investigates whether the forces acting on the car are in equilibrium at four different times, t_1, t_2, t_3 and t_4.

At which times are the forces acting on the car in equilibrium?

A t_1, t_2, t_3 and t_4 **B** t_1 and t_3 only **C** t_1 only **D** t_3 only

7 A car travels anticlockwise along a horizontal circular road of radius 12 m, as shown.

The car takes a time of 4.0 s to move from position P to position Q.

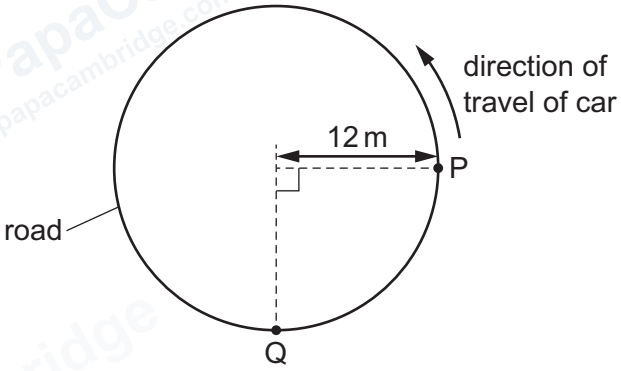

What is the magnitude of the average velocity of the car for the journey from P to Q?

A $4.2\,m\,s^{-1}$ **B** $4.7\,m\,s^{-1}$ **C** $6.0\,m\,s^{-1}$ **D** $14\,m\,s^{-1}$

© Cambridge University Press & Assessment 2026

GradeMax

8 A person is suspended from a rope vertically below a helicopter.

The helicopter and the person are stationary above the ground.

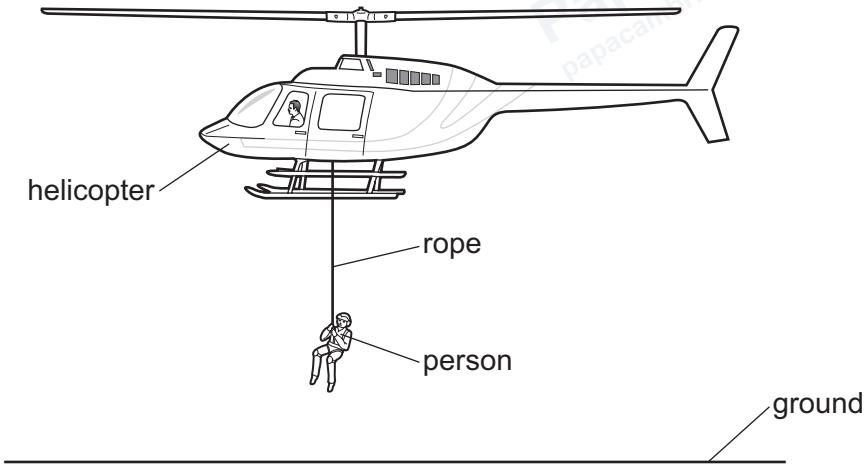

Which force forms a Newton's third law force pair with the weight of the person?

A the force of tension in the rope on the person

B the force of upthrust on the person

C the gravitational force applied by the person on the Earth

D the gravitational force applied by the person on the helicopter

9 Two small moving particles collide. After the collision, the particles move in different directions.

What is essential for the total momentum to be conserved in the collision?

A No external force acts on the system of the two colliding particles.

B No kinetic energy is lost as a result of the collision.

C The collision is inelastic.

D The relative speed of approach of the two particles is equal to their relative speed of separation.

© Cambridge University Press & Assessment 2026

10 Block 1 of mass 3.0 kg is on a horizontal frictionless table. A rope with negligible mass is attached to the block.

The rope passes over a frictionless pulley.

Block 2 of mass 1.0 kg is suspended from the other end of the rope, as shown.

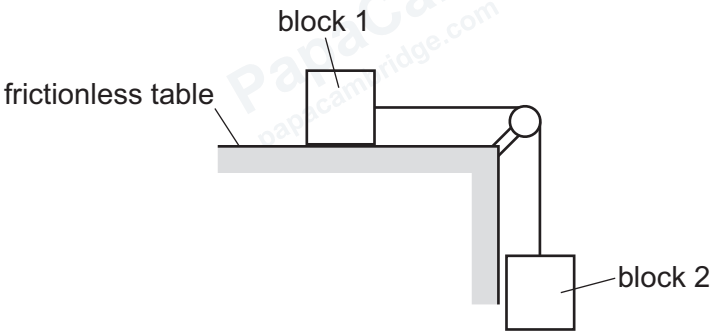

The blocks accelerate.

The acceleration of free fall is g. The unit of g is $\mathrm{m\,s^{-2}}$ and the tension in the rope has the unit N.

What is the tension in the rope in terms of g?

A $\frac{g}{4}$ **B** $\frac{g}{2}$ **C** $\frac{3g}{4}$ **D** g

11 The mass of an object can be determined by its relationship to other physical quantities.

Three relationships are shown.

1 $\frac{\text{resultant force on the object}}{\text{acceleration of the object}}$

2 $\frac{\text{linear momentum of the object}}{\text{velocity of the object}}$

3 $\frac{\text{weight of the object}}{\text{acceleration of the object}}$

Which relationships are always equal to the mass of the object?

A 1, 2 and 3 **B** 1 and 2 only **C** 1 only **D** 2 and 3 only

© Cambridge University Press & Assessment 2026

GradeMax

12 A basket is sliding on a horizontal frictionless surface with a velocity of $30\,\text{cm}\,\text{s}^{-1}$.

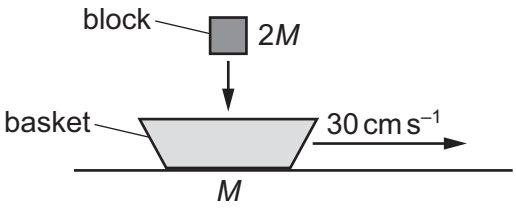

The mass of the basket is M.

A block of mass $2M$ falls vertically into the basket. The block and the basket then move together with the same horizontal speed v.

What is v?

A $10\,\text{cm}\,\text{s}^{-1}$ **B** $15\,\text{cm}\,\text{s}^{-1}$ **C** $30\,\text{cm}\,\text{s}^{-1}$ **D** $60\,\text{cm}\,\text{s}^{-1}$

13 Two children are balanced horizontally in equilibrium on a plank.

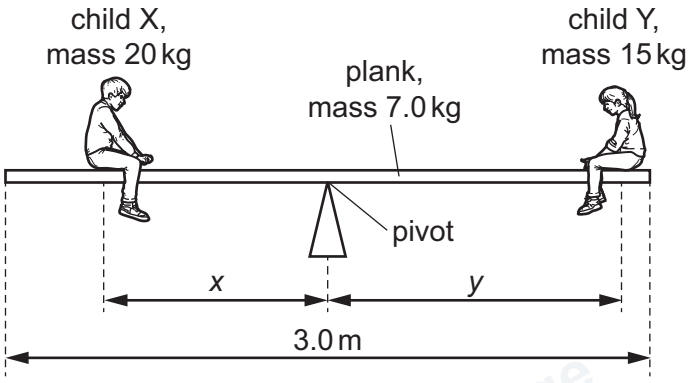

The plank is uniform with a mass of 7.0 kg and a length of 3.0 m. There is a pivot at the midpoint of the plank.

Child X has a mass of 20 kg and is distance x from the pivot. Child Y has a mass of 15 kg and is distance y from the pivot.

What is the value of the ratio $\frac{x}{y}$?

A 0.43 **B** 0.57 **C** 0.75 **D** 1.3

© Cambridge University Press & Assessment 2026

14 The diagrams show two ways of hanging the same picture.

diagram 1

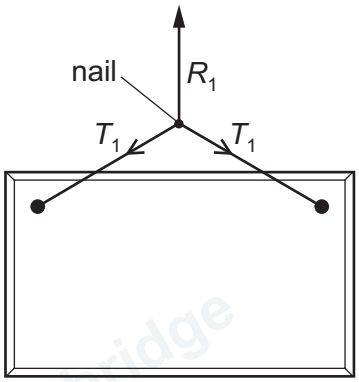

diagram 2

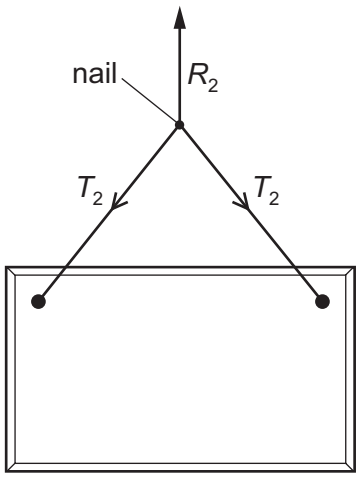

In both cases, a string is attached to the same points on the picture and looped symmetrically over a nail in a wall. The forces shown are those that act on the nail. The weight of the string is negligible.

In diagram 1, the string loop is shorter than in diagram 2.

Which information about the magnitude of the forces is correct?

A $R_1 = R_2$ $T_1 = T_2$

B $R_1 = R_2$ $T_1 > T_2$

C $R_1 > R_2$ $T_1 < T_2$

D $R_1 < R_2$ $T_1 = T_2$

15 The diagram shows four metal cylinders submerged inside a container of water.

Which cylinder has the greatest pressure on its top surface?

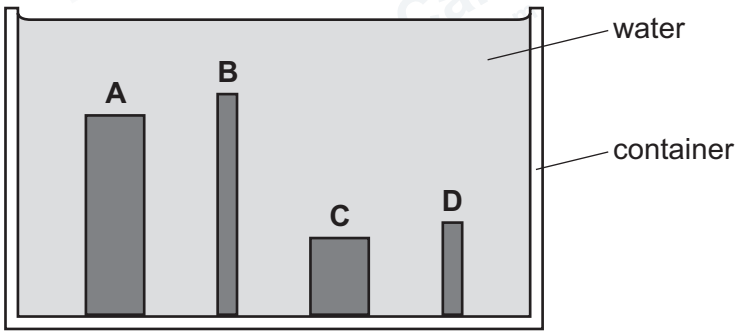

© Cambridge University Press & Assessment 2026

16 Three solid objects, cube P, cuboid Q and cylinder R, are shown.

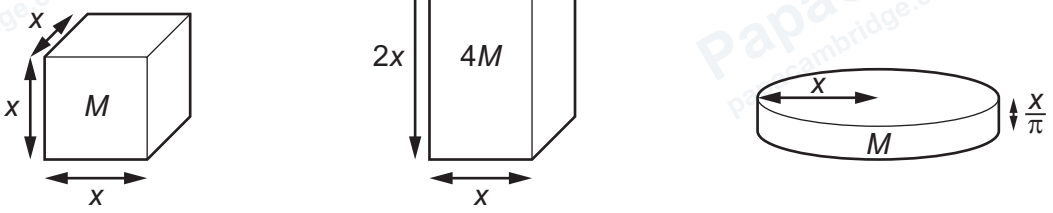

The dimensions and masses of the objects are given in terms of length x and mass M.

Which objects have the same density?

A P, Q and R **B** P and Q only **C** P and R only **D** Q and R only

17 A small ball is projected into the air from horizontal ground. The diagram shows part of the path of the ball.

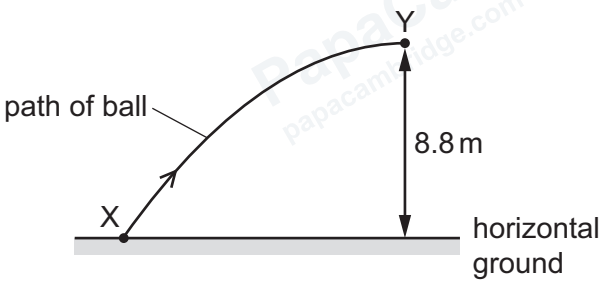

The ball leaves the ground at point X with a kinetic energy of 8.0 J. A short time later, the ball is at point Y where it has a kinetic energy of 3.5 J.

Point Y is at a vertical height of 8.8 m above the ground. Air resistance is negligible.

What is the mass of the ball?

A 0.041 kg **B** 0.052 kg **C** 0.093 kg **D** 0.13 kg

18 A boat requires a power P to move through still water with a constant velocity.

There is a drag force F acting on the boat.

What is the velocity of the boat?

A $\frac{F}{P}$ **B** $\sqrt{\frac{P}{F}}$ **C** $\frac{P}{F}$ **D** $P \times F$

© Cambridge University Press & Assessment 2026

GradeMax

19 When the speed of an object is increased from $10\,m\,s^{-1}$ to $20\,m\,s^{-1}$, its kinetic energy increases by E.

What is the increase in the kinetic energy of the object when its speed increases from $70\,m\,s^{-1}$ to $80\,m\,s^{-1}$?

A E **B** $4E$ **C** $5E$ **D** $7E$

20 Trains supply coal to a power station.

The table shows quantities describing the operation of the power station.

	symbol	**unit**
power station average output	P	W
number of trains per day	N	
mass of coal on a train	M	kg
energy from 1 kg of coal	E	J
number of seconds in one day	S	

Which expression gives the efficiency of the power station?

A $\frac{PS}{NME}$ **B** $\frac{PSN}{ME}$ **C** $\frac{NME}{PS}$ **D** $\frac{NM}{PSE}$

21 Which descriptions of objects undergoing elastic and plastic deformation are correct?

	object undergoing elastic deformation	**object undergoing plastic deformation**
A	is permanently deformed	is not permanently deformed
B	is not permanently deformed	is not permanently deformed
C	is permanently deformed	is permanently deformed
D	is not permanently deformed	is permanently deformed

22 A force F extends a length L of a uniform wire by an extension e.

The wire has diameter d and obeys Hooke's law.

What is the Young modulus of the material of the wire?

A $\frac{\pi d^2 e}{4FL}$ **B** $\frac{Fe}{\pi d^2 L}$ **C** $\frac{FL}{\pi d^2 e}$ **D** $\frac{4FL}{\pi d^2 e}$

© Cambridge University Press & Assessment 2026

GradeMax

23 An 8.00 N weight is attached to the lower end of a spring which is fixed at its upper end. The weight is initially held at rest at position X and the spring is unstretched. The weight is then released and falls to position Y, which is 4.00 cm below X. The weight oscillates and then eventually comes to rest at position O, which is 2.00 cm below X.

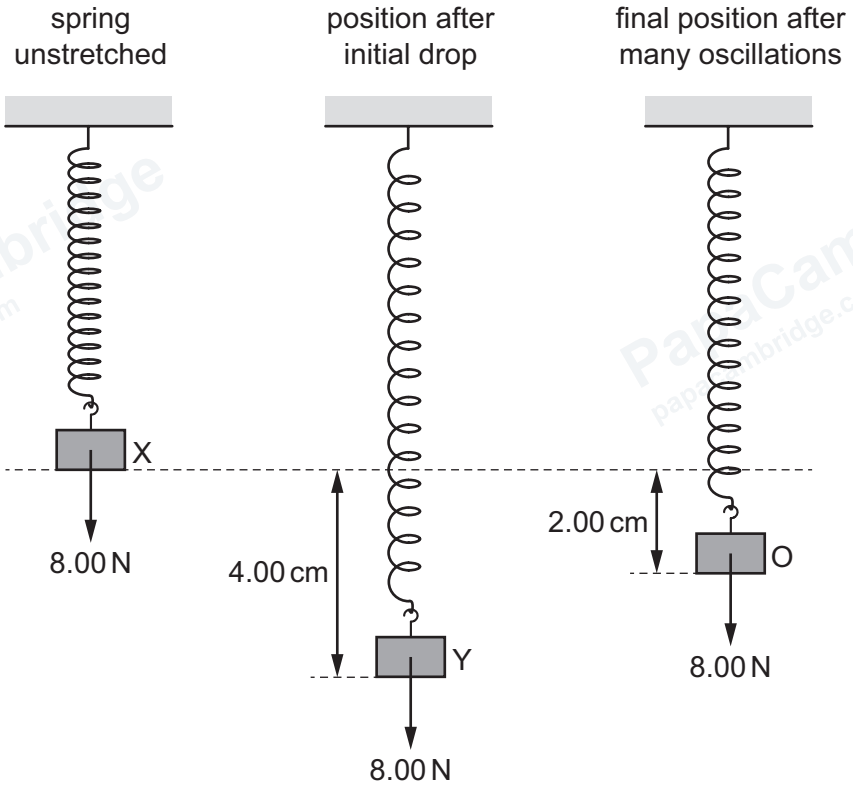

How much energy is lost from the system?

A 0.04 J **B** 0.08 J **C** 0.16 J **D** 0.32 J

24 An electromagnetic wave has a frequency of 3.3×10^{14} Hz.

Which principal region of the electromagnetic spectrum is this wave in?

A infrared

B visible light

C ultraviolet

D X-ray

© Cambridge University Press & Assessment 2026

GradeMax

25 A wave on a stretched string causes the particles on the string to vibrate.

The diagram shows part of the string at one instant.

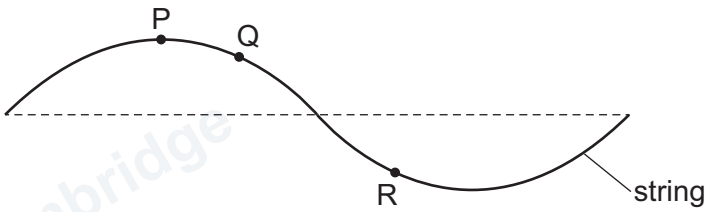

P, Q and R are particles on the string.

Which statement about two of the particles and the wave is correct?

A If it is a progressive wave, particles P and Q vibrate with a phase difference of 90°.

B If it is a stationary wave, particles P and Q vibrate with a phase difference of 90°.

C If it is a progressive wave, particles Q and R vibrate with a phase difference of 180°.

D If it is a stationary wave, particles Q and R vibrate with a phase difference of 180°.

26 What describes the displacement of a particle on a wave?

A the distance in a specified direction of the particle from its equilibrium position

B the distance moved in a specified direction by the particle per unit time

C the maximum distance of the particle from its equilibrium position

D the product of the speed of the wave and time

© Cambridge University Press & Assessment 2026

27 A beam of vertically polarised light of intensity I_0 is incident normally on a polarising filter.

The transmission axis of the filter is at an angle of 60° to the vertical.

The transmitted light beam is then incident normally on a second polarising filter. The transmission axis of the second filter is perpendicular to the vertical as shown.

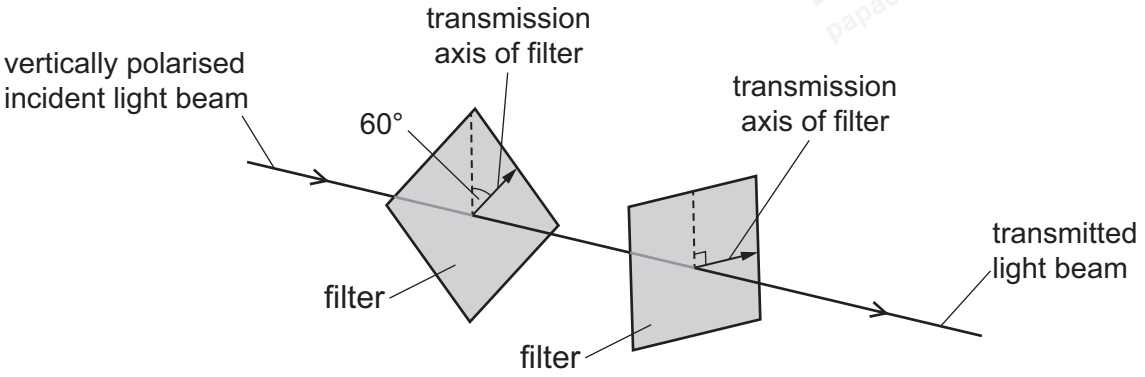

The intensity of the light beam that emerges from the second filter is I_T.

What is the ratio $\frac{I_T}{I_0}$?

A 0 **B** 0.19 **C** 0.25 **D** 0.43

28 A car is driving along a straight road while emitting a sound of a constant frequency. There is a stationary observer at each location X, Y and Z.



From X to Y, the car accelerates uniformly from rest up to a high speed.

From Y to Z, the car continues at this constant high speed.

Which observer will hear the highest frequency of sound and what is the position of the car when this frequency is heard by the observer?

	observer	position of car
A	at X	between X and Y
B	at Y	between X and Y
C	at Y	between Y and Z
D	at Z	between Y and Z

© Cambridge University Press & Assessment 2026 **[Turn over**

29 Each diagram shows a stationary wave on a stretched string.

Which diagram is correctly labelled?

A

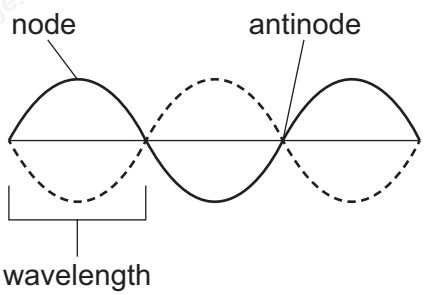

B

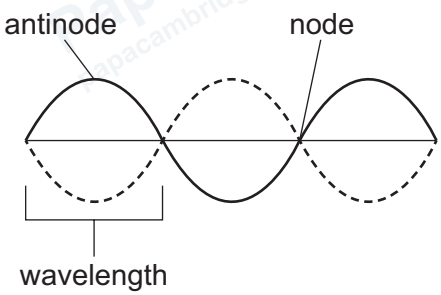

C

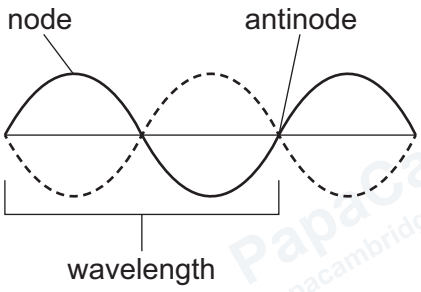

D

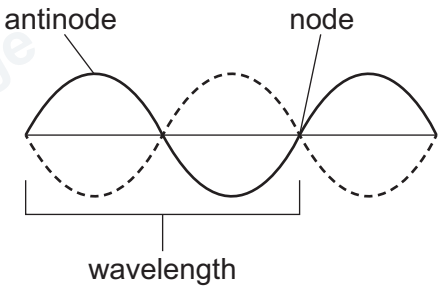

30 Two coherent electromagnetic waves are travelling in a vacuum. The two waves meet at a point. At this point, the two waves have different intensities.

Which statement about the waves is **not** correct?

A They have a constant phase difference at the point.

B They have the same amplitude at the point.

C They have the same frequency.

D They travel at the same speed.

31 Laser light of a single frequency is incident normally on a diffraction grating with 5.00×10^5 lines m^{-1}. A diffraction pattern is formed on a flat screen which is parallel to the grating.

The screen is a distance of 33.5 cm from the grating. The distance between the two first-order intensity maxima is 15.0 cm.

What is the wavelength of the light?

A 437 nm **B** 448 nm **C** 817 nm **D** 1950 nm

© Cambridge University Press & Assessment 2026

GradeMax

32 Which graph represents the variation with current I of potential difference (p.d.) V for a filament lamp?

A

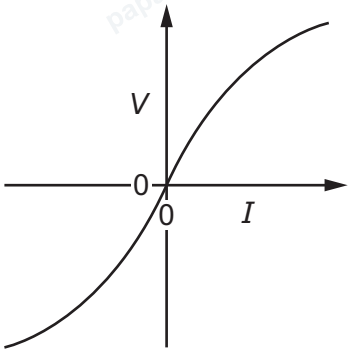

B

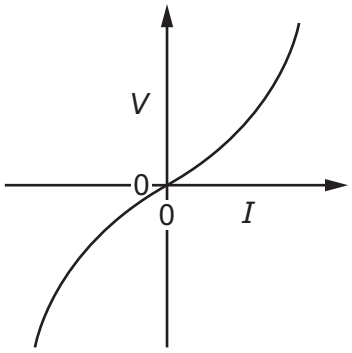

C

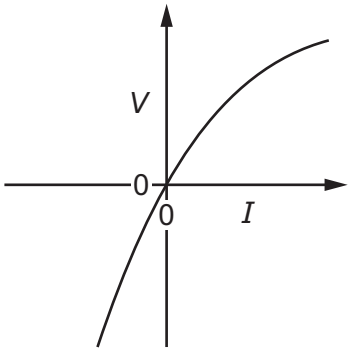

D

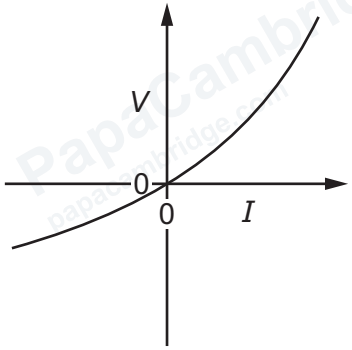

33 What is the definition of the potential difference (p.d.) across a component?

A the energy transferred per unit charge

B the energy transferred per unit time

C the power transferred per unit current

D the product of current and resistance

© Cambridge University Press & Assessment 2026

[Turn over

GradeMax

34 Conducting putty is a substance that conducts electricity and can be moulded into various shapes.

A cuboid made from this putty has length L and width x. The resistance between the square faces of the cuboid is $15\,\Omega$.

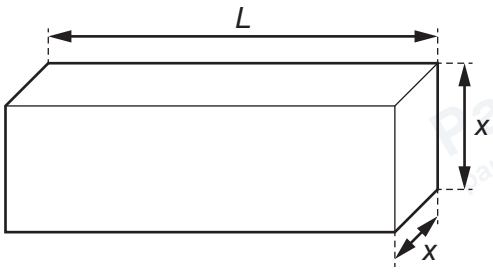

Some more of the putty is moulded into a cylinder that has length $\frac{L}{2}$.

The resistance between the circular faces of the cylinder is also $15\,\Omega$.

What is the radius of the cylinder?

A $\sqrt{\frac{x}{2\pi}}$ **B** $\frac{x}{\sqrt{2\pi}}$ **C** $\frac{x}{\sqrt{\pi}}$ **D** $\frac{\sqrt{2}x}{\sqrt{\pi}}$

35 Each of Kirchhoff's laws is linked to the conservation of a physical quantity.

Which conserved physical quantities are used in the derivation of Kirchhoff's first law and of Kirchhoff's second law?

	Kirchhoff's first law	**Kirchhoff's second law**
A	energy	charge
B	energy	momentum
C	charge	energy
D	momentum	energy

© Cambridge University Press & Assessment 2026

GradeMax

36 Eight identical resistors are connected as shown.

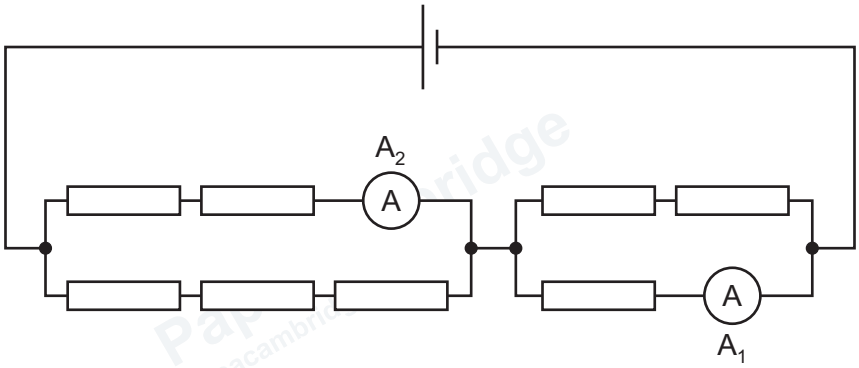

Ammeter A_1 reads 1.50 A.

What is the reading on ammeter A_2?

A 0.75 A **B** 0.90 A **C** 1.35 A **D** 1.50 A

37 A battery of electromotive force (e.m.f.) 6.0 V and negligible internal resistance is connected in series with a resistor of resistance 6.0 Ω and a variable resistor of resistance from zero to 4.0 Ω. A voltmeter is connected across the variable resistor. The resistance of the variable resistor is changed.

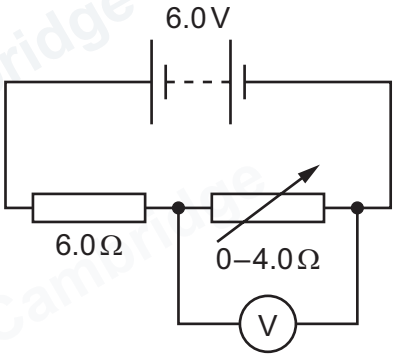

What is the range of the voltmeter reading?

A 0 V–2.4 V **B** 0 V–3.6 V **C** 2.4 V–6.0 V **D** 3.6 V–6.0 V

38 In the α-particle scattering experiment, a beam of α-particles is aimed at a thin gold foil.

Most of the α-particles go straight through or are deflected by a small angle. A very small proportion are deflected by more than 90°, effectively rebounding towards the source of the α-particles.

Which conclusion about the structure of atoms **cannot** be drawn from this experiment alone?

A Most of the atom is empty space.

B Most of the mass of an atom is concentrated in the nucleus.

C The nucleus contains both protons and neutrons.

D The nucleus is charged.

© Cambridge University Press & Assessment 2026

GradeMax

39 In a type of beta decay, an up quark changes flavour to a down quark.

Which row shows the new hadron created in this beta decay and the sign of the charge on the emitted beta particle?

	hadron created	**sign of charge on emitted beta particle**
A	neutron	+
B	neutron	–
C	proton	+
D	proton	–

40 Uranium, $^{238}_{92}U$, decays into radium, $^{226}_{88}Ra$, after a sequence of alpha and beta-minus decays.

Which row gives the correct number of alpha decays and beta-minus decays?

	α	β^-
A	2	3
B	3	2
C	2	0
D	3	0

© Cambridge University Press & Assessment 2026

BLANK PAGE

PapaCambridge papacambridge.com

GradeMax

BLANK PAGE

Permission to reproduce items where third-party owned material protected by copyright is included has been sought and cleared where possible. Every reasonable effort has been made by the publisher (Cambridge University Press & Assessment) to trace copyright holders, but if any items requiring clearance have unwittingly been included, the publisher will be pleased to make amends at the earliest possible opportunity.

To avoid the issue of disclosure of answer-related information to candidates, all copyright acknowledgements are reproduced online in our Copyright Acknowledgements Booklet. This is produced for each series of examinations and is freely available to download at www.cambridgeinternational.org after the live examination series.

Cambridge International Education is the name of our awarding body and a part of Cambridge University Press & Assessment, which is a department of the University of Cambridge.

© Cambridge University Press & Assessment 2026