GradeMax

* 0000800000001 * DFD

CAMBRIDGE
International Education

Cambridge International AS & A Level

CANDIDATE NAME

CENTRE NUMBER

CANDIDATE NUMBER

* 6 8 2 8 5 2 0 0 4 7 *

PHYSICS **9702/22**

Paper 2 AS Level Structured Questions **February/March 2026**

1 hour 15 minutes

You must answer on the question paper.

No additional materials are needed.

INSTRUCTIONS

- Answer **all** questions.
- Use a black or dark blue pen. You may use an HB pencil for any diagrams or graphs.
- Write your name, centre number and candidate number in the boxes at the top of the page.
- Write your answer to each question in the space provided.
- Do **not** use an erasable pen. Do **not** use correction fluid or tape.
- Do **not** write on any bar codes.
- You may use a calculator.
- You should show all your working and use appropriate units.

INFORMATION

- The total mark for this paper is 60.
- The number of marks for each question or part question is shown in brackets [ ].

This document has **16** pages. Any blank pages are indicated.

DC (WW/JG) 356451/4
© Cambridge University Press & Assessment 2026

[Turn over

GradeMax

Data

acceleration of free fall	g	=	$9.81\ \text{m s}^{-2}$
speed of light in free space	c	=	$3.00 \times 10^{8}\ \text{m s}^{-1}$
elementary charge	e	=	$1.60 \times 10^{-19}\ \text{C}$
unified atomic mass unit	1 u	=	$1.66 \times 10^{-27}\ \text{kg}$
rest mass of proton	m_p	=	$1.67 \times 10^{-27}\ \text{kg}$
rest mass of electron	m_e	=	$9.11 \times 10^{-31}\ \text{kg}$
Avogadro constant	N_A	=	$6.02 \times 10^{23}\ \text{mol}^{-1}$
molar gas constant	R	=	$8.31\ \text{J K}^{-1}\ \text{mol}^{-1}$
Boltzmann constant	k	=	$1.38 \times 10^{-23}\ \text{J K}^{-1}$
gravitational constant	G	=	$6.67 \times 10^{-11}\ \text{N m}^2\ \text{kg}^{-2}$
permittivity of free space	ε_0	=	$8.85 \times 10^{-12}\ \text{F m}^{-1}$
	$\left(\frac{1}{4\pi\varepsilon_0}\right.$	=	$\left.8.99 \times 10^{9}\ \text{m F}^{-1}\right)$
Planck constant	h	=	$6.63 \times 10^{-34}\ \text{J s}$
Stefan–Boltzmann constant	σ	=	$5.67 \times 10^{-8}\ \text{W m}^{-2}\ \text{K}^{-4}$

Formulae

uniformly accelerated motion	s	=	$ut + \frac{1}{2}at^2$
	v^2	=	$u^2 + 2as$
hydrostatic pressure	Δp	=	$\rho g \Delta h$
upthrust	F	=	$\rho g V$
Doppler effect for sound waves	f_o	=	$\frac{f_\text{s} v}{v \pm v_\text{s}}$
electric current	I	=	$Anvq$
resistors in series	R	=	$R_1 + R_2 + \ldots$
resistors in parallel	$\frac{1}{R}$	=	$\frac{1}{R_1} + \frac{1}{R_2} + \ldots$

© Cambridge University Press & Assessment 2026

DO NOT WRITE IN THIS MARGIN
DO NOT WRITE IN THIS MARGIN
DO NOT WRITE IN THIS MARGIN
DO NOT WRITE IN THIS MARGIN
DO NOT WRITE IN THIS MARGIN

GradeMax

DO NOT WRITE IN THIS MARGIN
DO NOT WRITE IN THIS MARGIN
DO NOT WRITE IN THIS MARGIN
DO NOT WRITE IN THIS MARGIN
DO NOT WRITE IN THIS MARGIN

1 **(a)** Define force.

.....

..... [1]

(b) Use the definition in **1(a)** to show that the SI base units of force are $kg\,m\,s^{-2}$.

[1]

(c) A student is investigating the relationship between the force applied to the piston of a syringe and the velocity of fluid exiting the syringe. The student wishes to use the equation

$$v = \frac{Fk}{mA}$$

where:
v is the velocity of fluid exiting the syringe
F is the force applied to the piston
k is a constant with SI base units $m^2\,s^{-1}$
m is the mass of the fluid in the syringe
A is the cross-sectional area of the piston.

By considering SI base units on both sides of the equation, state and explain whether this equation is homogeneous.

.....

..... [2]

[Total: 4]

© Cambridge University Press & Assessment 2026

GradeMax

2 **(a)** State the principle of conservation of momentum.

.....

.....

.....

..... [2]

(b) A stationary boat of mass 160 kg floats on water. The mast of the boat is vertical. A sack of mass 23 kg is thrown at the boat, as shown in Figure 2.1.

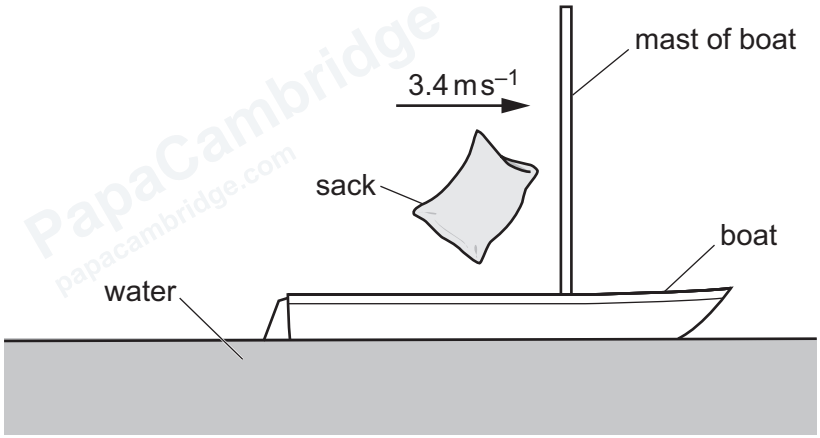

Figure 2.1

Immediately before colliding with the mast of the boat, the sack is travelling horizontally with a speed of 3.4 m s^{-1}.

The sack collides with the mast and remains in contact with it, without rebounding.

Assume that resistive forces acting on the boat during the collision are negligible.

(i) Calculate the horizontal speed v of the sack and boat immediately after the collision.

v = ... m s^{-1} [2]

© Cambridge University Press & Assessment 2026

DO NOT WRITE IN THIS MARGIN
DO NOT WRITE IN THIS MARGIN
DO NOT WRITE IN THIS MARGIN
DO NOT WRITE IN THIS MARGIN
DO NOT WRITE IN THIS MARGIN

GradeMax

(ii) The total kinetic energy of the sack and boat immediately before the collision is E_1. The total kinetic energy of the sack and boat immediately after the collision is E_2.

Determine the ratio $\frac{E_2}{E_1}$.

ratio = ... [3]

(iii) State and explain whether the collision between the sack and boat is elastic or inelastic.

.....

.....

..... [1]

(c) After a short time, the boat in **2(b)** is at rest again.

(i) Show that the upthrust acting on the boat with the sack is 1800 N.

[1]

(ii) The boat displaces water with a volume of $1.80 \times 10^5\,\text{cm}^3$.

Calculate the density of the water. Give your answer to 3 significant figures.

density = ... kg m^{-3} [2]

[Total: 11]

© Cambridge University Press & Assessment 2026

DO NOT WRITE IN THIS MARGIN
DO NOT WRITE IN THIS MARGIN
DO NOT WRITE IN THIS MARGIN
DO NOT WRITE IN THIS MARGIN
DO NOT WRITE IN THIS MARGIN

3 A rollercoaster carriage of mass 280 kg travels over a raised section of track, as illustrated in Figure 3.1.

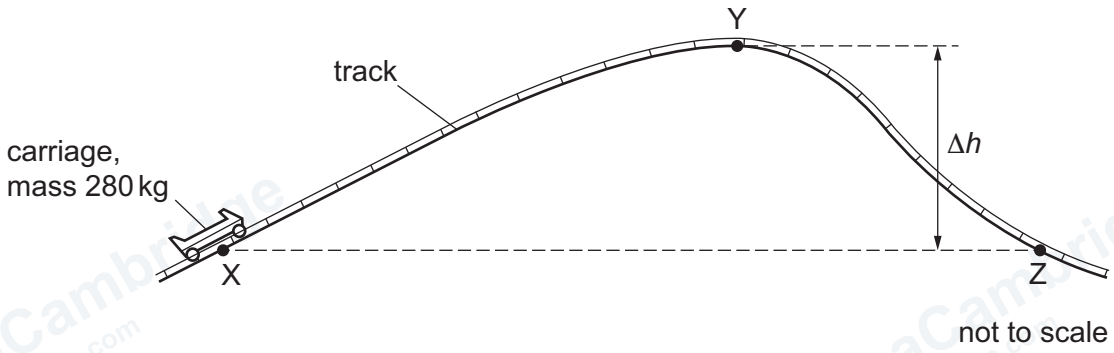

Figure 3.1

At position X, the carriage has kinetic energy 16.1 kJ. At position Y, the carriage has kinetic energy 1.3 kJ. The length of track between X and Y is 23 m.

In moving from X to Y the carriage does 5.1 kJ of work against resistive forces.

(a) (i) Calculate the average resistive force acting on the carriage between X and Y.

average force = ... N [2]

(ii) Calculate the change in height Δh between X and Y.

Δh = ... m [3]

© Cambridge University Press & Assessment 2026

GradeMax

DO NOT WRITE IN THIS MARGIN

DO NOT WRITE IN THIS MARGIN

DO NOT WRITE IN THIS MARGIN

DO NOT WRITE IN THIS MARGIN

DO NOT WRITE IN THIS MARGIN

PapaCambridge papacambridge.com

GradeMax

(b) The carriage travels further along the track to point Z.

State and explain whether the speed of the carriage at Z is greater than, less than or the same as the speed of the carriage at X.

.....

.....

..... [1]

[Total: 6]

DO NOT WRITE IN THIS MARGIN
DO NOT WRITE IN THIS MARGIN
DO NOT WRITE IN THIS MARGIN
DO NOT WRITE IN THIS MARGIN
DO NOT WRITE IN THIS MARGIN

© Cambridge University Press & Assessment 2026

4 A uniform square picture is attached to a wire and hangs in equilibrium from a pin at point P, as shown in Figure 4.1.

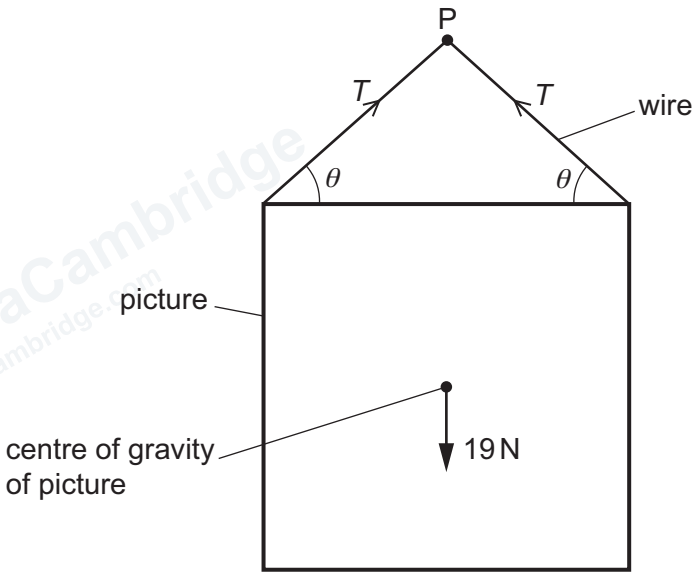

not to scale

Figure 4.1

The picture has weight 19 N and its centre of gravity is directly below P.

The top side of the picture is horizontal. The wire forms an angle θ with the horizontal. The tension T in the wire is 13 N.

(a) (i) Define the moment of a force about a point.

.....

..... [1]

(ii) Explain why the moment of the weight about P is zero.

.....

..... [1]

(iii) Calculate θ.

θ = ... ° [2]

© Cambridge University Press & Assessment 2026

GradeMax

DO NOT WRITE IN THIS MARGIN

PapaCambridge papacambridge.com

GradeMax

(iv) The wire has diameter 0.80 mm and is made of a metal with Young modulus 9.3×10^{10} Pa. The wire obeys Hooke's Law.

Calculate the strain ε in the wire.

ε = ... [3]

(b) The bottom side of the picture shown in Figure 4.1 is 1.6 m above the ground. The pin at P breaks, and the picture falls vertically downwards. Resistive forces acting on the picture are negligible.

(i) Calculate the time taken for the bottom side of the picture to hit the ground.

time = ... s [2]

(ii) On Figure 4.2, sketch the variation of the speed of the picture with the distance fallen from its initial position.

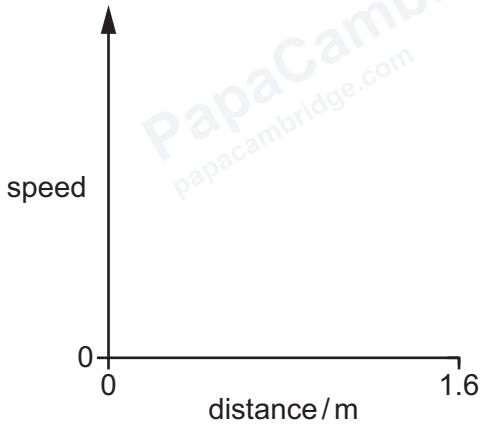

Figure 4.2

[2]

[Total: 11]

© Cambridge University Press & Assessment 2026

DO NOT WRITE IN THIS MARGIN
DO NOT WRITE IN THIS MARGIN
DO NOT WRITE IN THIS MARGIN
DO NOT WRITE IN THIS MARGIN
DO NOT WRITE IN THIS MARGIN

5 **(a)** For a progressive wave, state what is meant by:

(i) period

.....

..... [1]

(ii) amplitude.

.....

..... [1]

(b) A stretched string is fixed at both ends and made to vibrate with a frequency of 25 Hz. A stationary wave is formed on the string. The distance between the fixed ends of the string is 0.96 m.

Figure 5.1 shows the string at one instant.

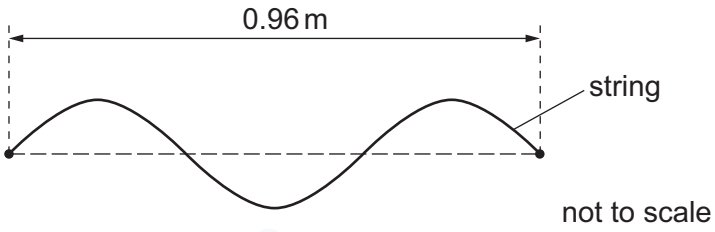

Figure 5.1

(i) On Figure 5.1, draw a cross (×) at the position of an antinode. [1]

(ii) Show that the speed of a progressive wave on the string is 16 m s^{-1}.

[3]

(iii) The frequency of the vibrations is increased to 30 Hz. The speed of the wave on the string does not change.

State and explain whether a stationary wave is formed.

.....

.....

.....

..... [2]

© Cambridge University Press & Assessment 2026

DO NOT WRITE IN THIS MARGIN
DO NOT WRITE IN THIS MARGIN
DO NOT WRITE IN THIS MARGIN
DO NOT WRITE IN THIS MARGIN
DO NOT WRITE IN THIS MARGIN

GradeMax

(c) A beam of light of wavelength 4.5×10^{-7} m is incident normally on a diffraction grating with 6.7×10^{5} lines per metre. The light passes through the grating and forms a pattern of bright spots on a screen that is parallel to the grating.

Figure 5.2 shows two of the bright spots in the pattern.

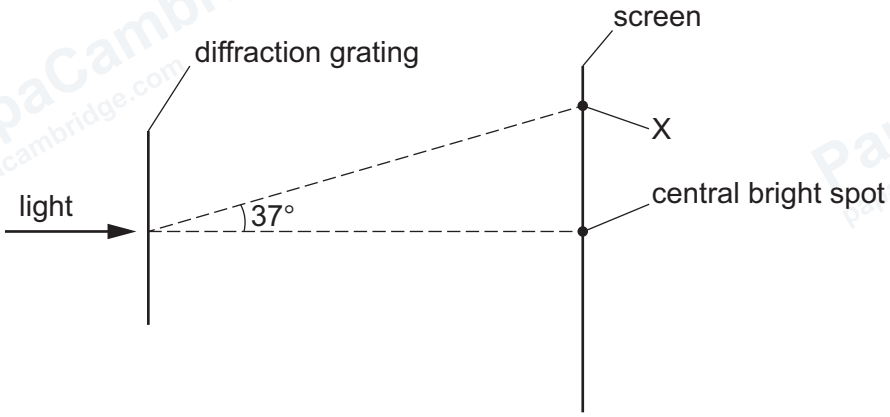

not to scale

Figure 5.2

The angle formed at the diffraction grating between the central bright spot and the bright spot at position X is 37°.

(i) Calculate the order *n* of the bright spot formed at X.

n = ... [3]

(ii) The diffraction grating is replaced by a grating with fewer lines per metre.

State whether the distance between adjacent bright spots on the screen increases, decreases or remains the same.

..... [1]

[Total: 12]

DO NOT WRITE IN THIS MARGIN
DO NOT WRITE IN THIS MARGIN
DO NOT WRITE IN THIS MARGIN
DO NOT WRITE IN THIS MARGIN
DO NOT WRITE IN THIS MARGIN

© Cambridge University Press & Assessment 2026

GradeMax

BLANK PAGE

DO NOT WRITE IN THIS MARGIN
DO NOT WRITE IN THIS MARGIN
DO NOT WRITE IN THIS MARGIN
DO NOT WRITE IN THIS MARGIN
DO NOT WRITE IN THIS MARGIN

© Cambridge University Press & Assessment 2026

GradeMax

6 **(a)** State what is meant by an electric current.

.....

..... [1]

(b) A cell has electromotive force (e.m.f.) 1.50 V and internal resistance 0.75 Ω.

On Figure 6.1, draw the variation of the terminal potential difference (p.d.) with current in the cell for current between 0 A and 1.6 A.

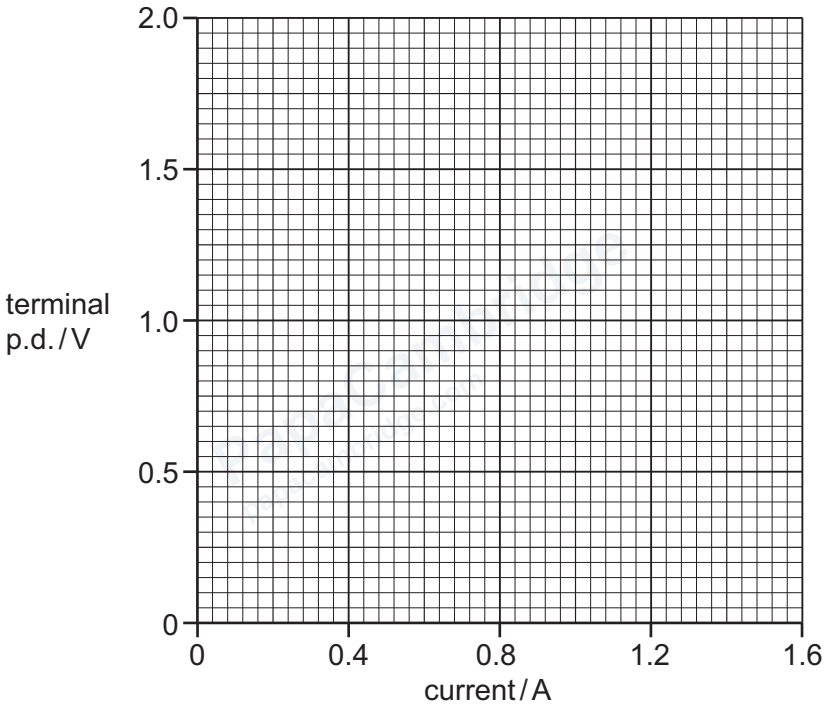

Figure 6.1

[2]

DO NOT WRITE IN THIS MARGIN
DO NOT WRITE IN THIS MARGIN
DO NOT WRITE IN THIS MARGIN
DO NOT WRITE IN THIS MARGIN
DO NOT WRITE IN THIS MARGIN

(c) A metal wire X has length 6.8 m and cross-sectional area $2.0 \times 10^{-7}\,m^2$. The resistance of the wire is 0.82 Ω.

The wire is connected to a circuit containing the cell in **6(b)** and a fixed resistor of resistance *R*, as shown in Figure 6.2.

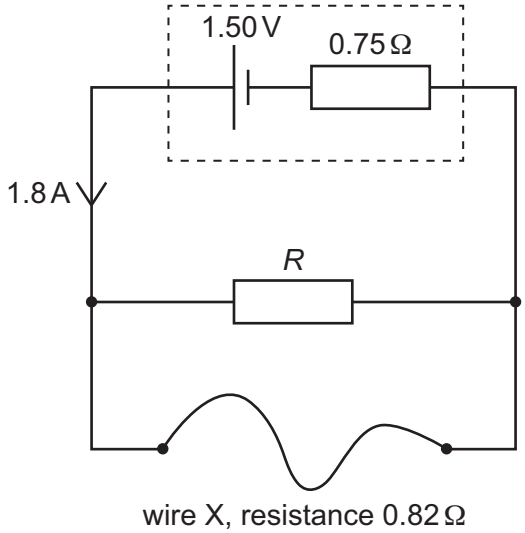

Figure 6.2

The current in the cell is 1.8 A.

(i) Calculate the resistivity ρ of the metal from which wire X is made.

ρ = ... Ω m [2]

(ii) Calculate *R*.

R = ... Ω [3]

© Cambridge University Press & Assessment 2026

GradeMax

DO NOT WRITE IN THIS MARGIN

DO NOT WRITE IN THIS MARGIN

DO NOT WRITE IN THIS MARGIN

DO NOT WRITE IN THIS MARGIN

DO NOT WRITE IN THIS MARGIN

GradeMax

(iii) Calculate the power dissipated in the internal resistance of the cell.

power = ... W [2]

[Total: 10]

DO NOT WRITE IN THIS MARGIN
DO NOT WRITE IN THIS MARGIN
DO NOT WRITE IN THIS MARGIN
DO NOT WRITE IN THIS MARGIN
DO NOT WRITE IN THIS MARGIN

GradeMax

7 **(a)** Describe the structure of a nuclear atom.

.....

.....

..... [2]

(b) P and Q are radioactive nuclei. P has 94 protons. Q has 91 protons.

Each nucleus decays to form a nucleus with 92 protons.

(i) State the type of radioactive decay experienced by P.

..... [1]

(ii) State the type of radioactive decay experienced by Q.

..... [1]

(c) Particle X has a ratio of $\frac{\text{charge}}{\text{mass}}$ equal to $+1.76 \times 10^{11}\,\text{C kg}^{-1}$.

Identify particle X. Show your working.

particle X ..... [2]

[Total: 6]

Permission to reproduce items where third-party owned material protected by copyright is included has been sought and cleared where possible. Every reasonable effort has been made by the publisher (Cambridge University Press & Assessment) to trace copyright holders, but if any items requiring clearance have unwittingly been included, the publisher will be pleased to make amends at the earliest possible opportunity.

To avoid the issue of disclosure of answer-related information to candidates, all copyright acknowledgements are reproduced online in our Copyright Acknowledgements Booklet. This is produced for each series of examinations and is freely available to download at www.cambridgeinternational.org after the live examination series.

Cambridge International Education is the name of our awarding body and a part of Cambridge University Press & Assessment, which is a department of the University of Cambridge.

© Cambridge University Press & Assessment 2026

DO NOT WRITE IN THIS MARGIN DO NOT WRITE IN THIS MARGIN DO NOT WRITE IN THIS MARGIN DO NOT WRITE IN THIS MARGIN DO NOT WRITE IN THIS MARGIN