GradeMax

* 0000800000001 * DFD

CAMBRIDGE
International Education

Cambridge International AS & A Level

CANDIDATE NAME

CENTRE NUMBER

CANDIDATE NUMBER

* 7 5 0 7 9 6 2 3 3 2 *

PHYSICS **9702/33**

Paper 3 Advanced Practical Skills 1 **February/March 2026**

2 hours

You must answer on the question paper.

You will need: The materials and apparatus listed in the confidential instructions

INSTRUCTIONS

- Answer **all** questions.
- Use a black or dark blue pen. You may use an HB pencil for any diagrams or graphs.
- Write your name, centre number and candidate number in the boxes at the top of the page.
- Write your answer to each question in the space provided.
- Do **not** use an erasable pen. Do **not** use correction fluid or tape.
- Do **not** write on any bar codes.
- You will be allowed to work with the apparatus for a maximum of 1 hour for each question.
- You should record all your observations in the spaces provided in the question paper as soon as these observations are made.
- You may use a calculator.
- You should show all your working and use appropriate units.

INFORMATION

- The total mark for this paper is 40.
- The number of marks for each question or part question is shown in brackets [ ].

For Examiner's Use	
1	
2	
Total	

This document has **12** pages.

DC (SL/CT) 356459/4
© Cambridge University Press & Assessment 2026

[Turn over

GradeMax

You may not need to use all of the materials provided.

1 In this experiment, you will investigate the equilibrium of forces.

(a)
- Assemble the apparatus as shown in Figure 1.1.
- Pass the nail through the central hole in the metre rule. Secure the nail in the boss.
- Attach one end of the paper clip chain to the string loop.
- Attach the loop of the plumb line to the nail.

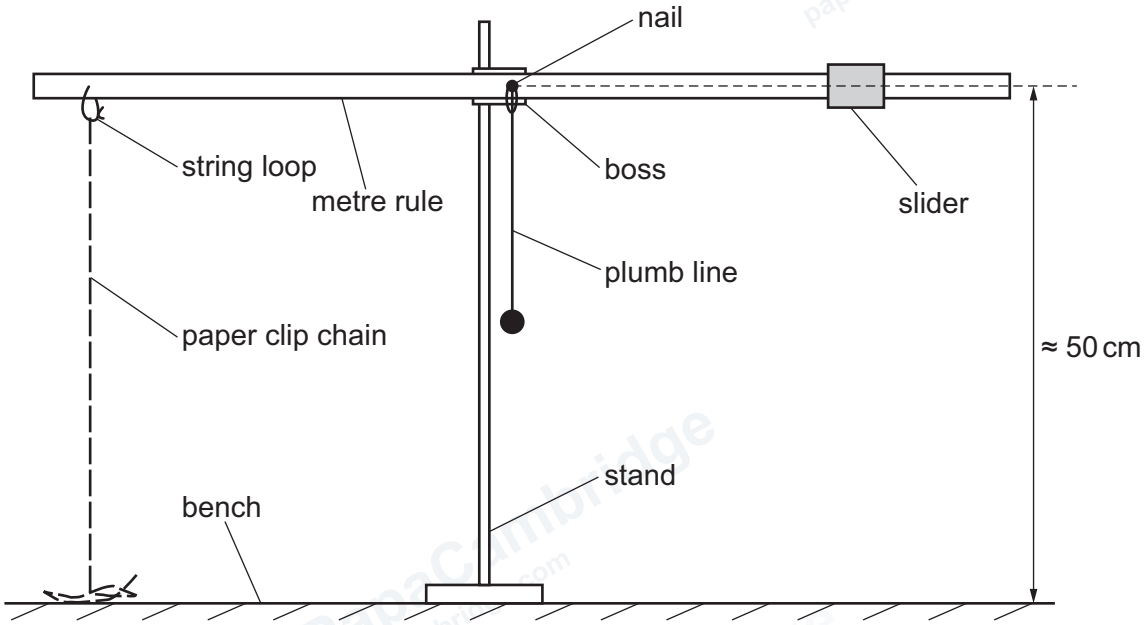

Figure 1.1

- Adjust the height of the boss so that the nail is approximately 50 cm above the bench.
- Check that the metre rule swings freely.
- Adjust the position of the slider until the metre rule is approximately parallel to the bench, as shown in Figure 1.1.

DO NOT WRITE IN THIS MARGIN
DO NOT WRITE IN THIS MARGIN
DO NOT WRITE IN THIS MARGIN
DO NOT WRITE IN THIS MARGIN
DO NOT WRITE IN THIS MARGIN

© Cambridge University Press & Assessment 2026

GradeMax

- Increase the distance between the nail and the slider by approximately 5 cm. Wait for the metre rule to settle into its new equilibrium position, as shown in Figure 1.2.

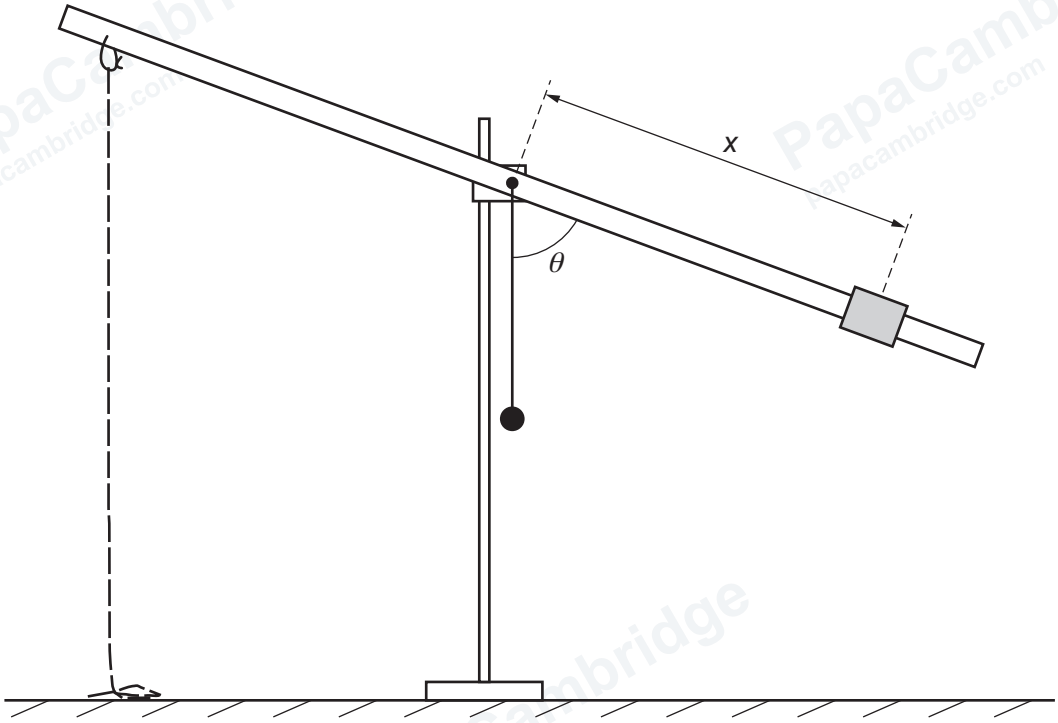

Figure 1.2

- The distance between the nail and the centre of the slider is x.

  The angle between the plumb line and the metre rule is θ, as shown in Figure 1.2.

  Measure and record x and θ.

x = ...

θ = ... °

[2]

DO NOT WRITE IN THIS MARGIN
DO NOT WRITE IN THIS MARGIN
DO NOT WRITE IN THIS MARGIN
DO NOT WRITE IN THIS MARGIN
DO NOT WRITE IN THIS MARGIN

© Cambridge University Press & Assessment 2026

GradeMax

(b) Move the slider to a new position. Ensure that at least one paper clip is touching the bench and θ is less than 90°. Measure and record x and θ.

Repeat until you have six sets of values of x and θ.

Record your results in a table. Include values of $\sin(90 - \theta)$ in your table. Give all values of $\sin(90 - \theta)$ to three significant figures.

[10]

(c) **(i)** Plot a graph of $\sin(90 - \theta)$ on the y-axis against x on the x-axis. [3]

(ii) Draw the straight line of best fit. [1]

(iii) Determine the gradient and y-intercept of this line.

gradient = ...

y-intercept = ...

[2]

© Cambridge University Press & Assessment 2026

DO NOT WRITE IN THIS MARGIN
DO NOT WRITE IN THIS MARGIN
DO NOT WRITE IN THIS MARGIN
DO NOT WRITE IN THIS MARGIN
DO NOT WRITE IN THIS MARGIN

GradeMax

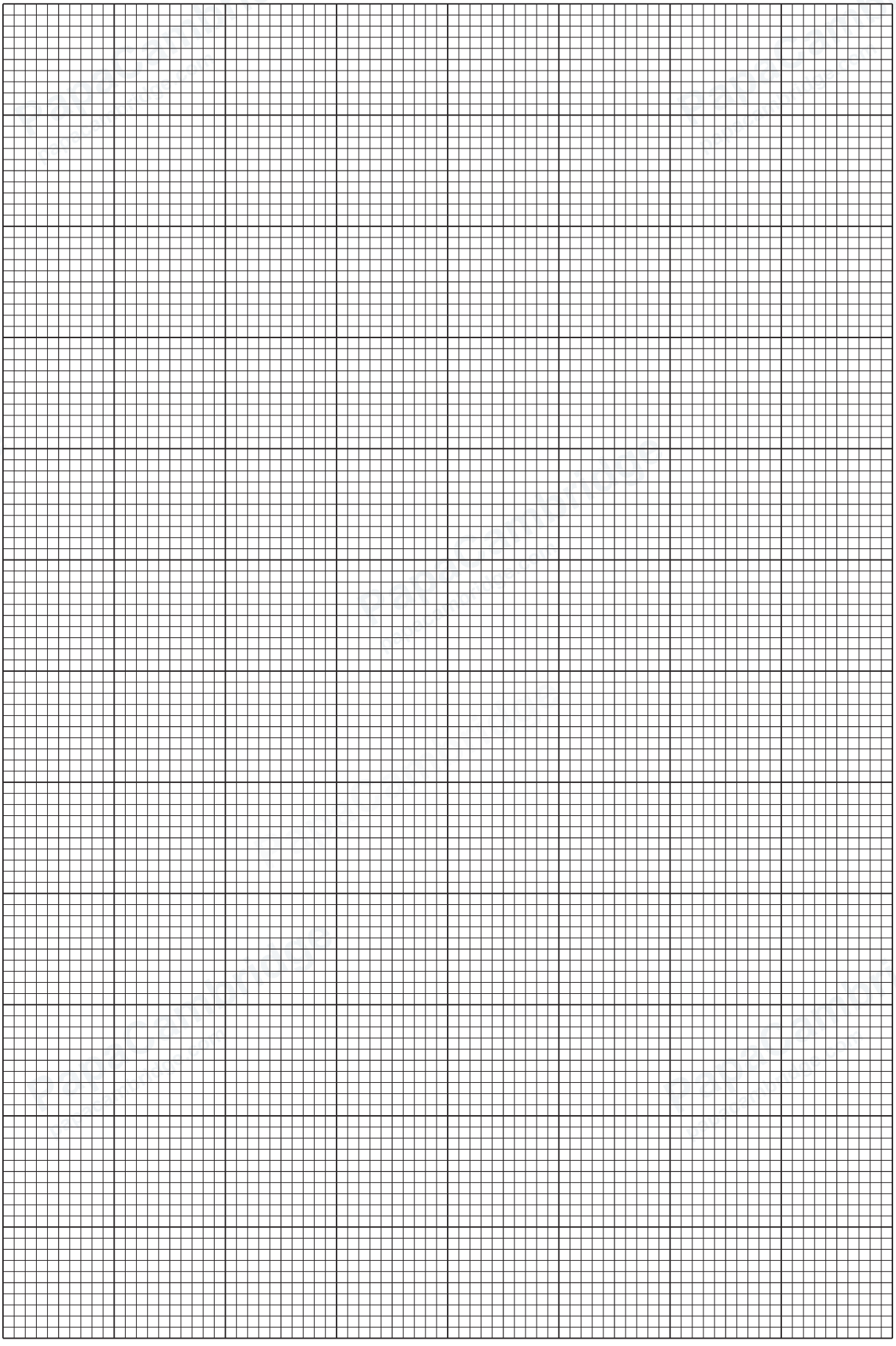

DO NOT WRITE IN THIS MARGIN
DO NOT WRITE IN THIS MARGIN
DO NOT WRITE IN THIS MARGIN
DO NOT WRITE IN THIS MARGIN
DO NOT WRITE IN THIS MARGIN

GradeMax

(d) It is suggested that the quantities θ and x are related by the equation

$$\sin(90 - \theta) = px + q$$

where p and q are constants.

Use your answers in **1(c)(iii)** to determine the values of p and q.
Give appropriate units.

p = ...

q = ...
[2]

[Total: 20]

DO NOT WRITE IN THIS MARGIN
DO NOT WRITE IN THIS MARGIN
DO NOT WRITE IN THIS MARGIN
DO NOT WRITE IN THIS MARGIN
DO NOT WRITE IN THIS MARGIN

© Cambridge University Press & Assessment 2026

GradeMax

You may not need to use all of the materials provided.

2 In this experiment, you will investigate the vibrations of a hacksaw blade.

(a) (i) • Clamp the hacksaw blade between the two wooden blocks as shown in Figure 2.1.

The length of the blade outside the blocks should be at least 26 cm.

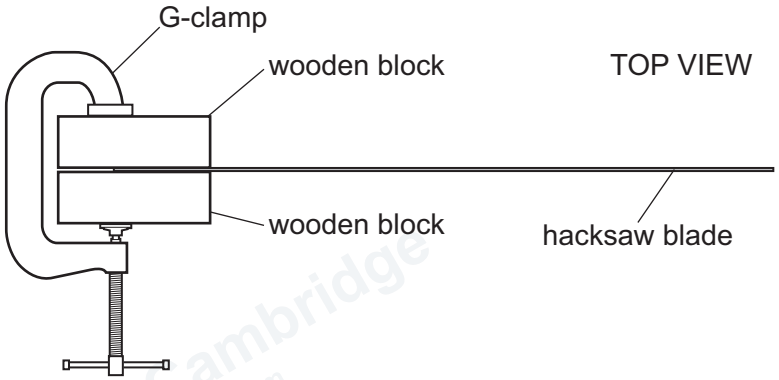

Figure 2.1

• Clamp the wooden blocks to the bench as shown in Figure 2.2.

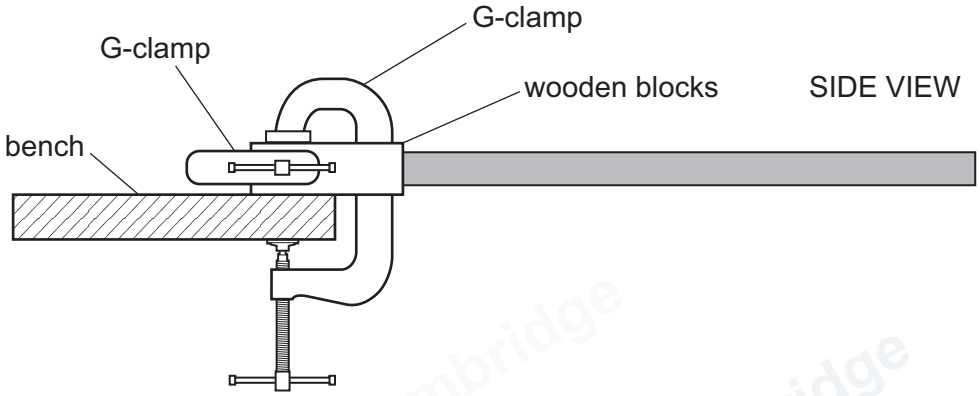

Figure 2.2

DO NOT WRITE IN THIS MARGIN
DO NOT WRITE IN THIS MARGIN
DO NOT WRITE IN THIS MARGIN
DO NOT WRITE IN THIS MARGIN
DO NOT WRITE IN THIS MARGIN

GradeMax

- Pass the screw through the two slotted masses. Loosely attach the wing nut to the screw.

- Position the slotted masses either side of the hacksaw blade with the screw resting on the top of the hacksaw blade as shown in Figure 2.3.

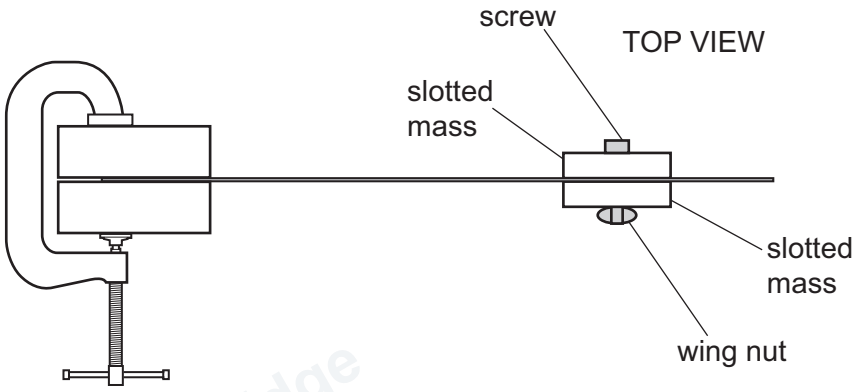

Figure 2.3

- Tighten the wing nut.

- Place the string of the pendulum over the hacksaw blade approximately 3 cm from the wooden blocks.

- The distance between the bottom of the hacksaw blade and the centre of the pendulum bob is *L* as shown in Figure 2.4.

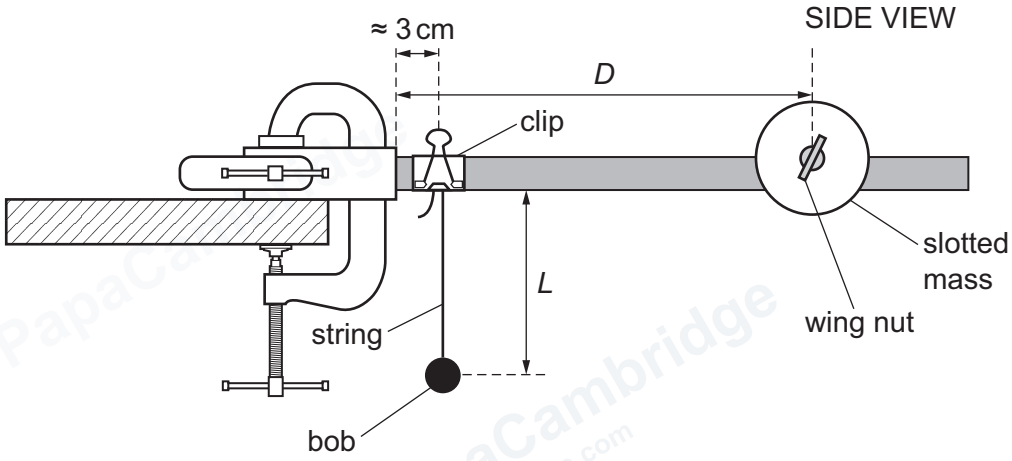

Figure 2.4

- Adjust the string so that *L* is approximately 4 cm. Secure the string with the clip, as shown in Figure 2.4.

- Measure and record *L*.

L = ... [1]

© Cambridge University Press & Assessment 2026

DO NOT WRITE IN THIS MARGIN
DO NOT WRITE IN THIS MARGIN
DO NOT WRITE IN THIS MARGIN
DO NOT WRITE IN THIS MARGIN
DO NOT WRITE IN THIS MARGIN

GradeMax

(ii)
- Move the free end of the hacksaw blade horizontally to one side and release it so that it oscillates. The movement will cause the pendulum to oscillate.
- Change the position of the slotted masses on the hacksaw blade and repeat until the amplitude of the pendulum oscillations is a maximum. Secure the masses.
- The distance between the centre of the masses and the wooden blocks is *D*, as shown in Figure 2.4.

  Measure and record *D*.

D = ... [1]

(iii) Estimate the percentage uncertainty in your value of *D*. Show your working.

percentage uncertainty = ...% [1]

(b) (i)
- Adjust the length of the pendulum until *L* is approximately 25 cm.
- Measure and record *L*.

L = ... [1]

(ii) Repeat **2(a)(ii)**.

D = ... [2]

DO NOT WRITE IN THIS MARGIN
DO NOT WRITE IN THIS MARGIN
DO NOT WRITE IN THIS MARGIN
DO NOT WRITE IN THIS MARGIN
DO NOT WRITE IN THIS MARGIN

© Cambridge University Press & Assessment 2026

(c) It is suggested that the relationship between D and L is

$$D^3 = kL$$

where k is a constant.

(i) Using your data, calculate **two** values for k.

first value of k = ...

second value of k = ...

[1]

(ii) Justify the number of significant figures that you have given for your values of k.

.....

.....

..... [1]

(d) It is suggested that the percentage uncertainty in the values of k is 15%.
Using this uncertainty, explain whether your results support the relationship in **2(c)**.

.....

.....

..... [1]

DO NOT WRITE IN THIS MARGIN
DO NOT WRITE IN THIS MARGIN
DO NOT WRITE IN THIS MARGIN
DO NOT WRITE IN THIS MARGIN
DO NOT WRITE IN THIS MARGIN

© Cambridge University Press & Assessment 2026

GradeMax

(e) (i) The width of the hacksaw blade is w and the thickness of the blade is t as shown in Figure 2.5.

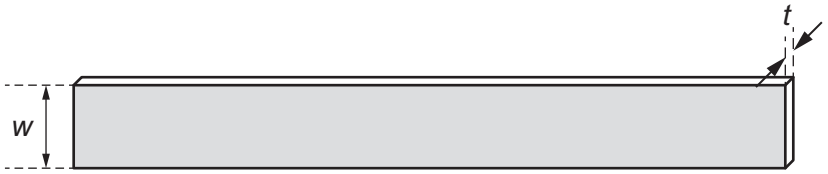

Figure 2.5

Measure and record w and t.

w = ... cm

t = ... cm
[2]

(ii) The Young modulus of the steel used to make the hacksaw blade is E.

Calculate E using the second value of k in the expression

$$E = \frac{Rk}{t^3 w}$$

where R has the value 7.85 N.

E = ... $\mathrm{N\,cm^{-2}}$ [1]

DO NOT WRITE IN THIS MARGIN
DO NOT WRITE IN THIS MARGIN
DO NOT WRITE IN THIS MARGIN
DO NOT WRITE IN THIS MARGIN
DO NOT WRITE IN THIS MARGIN

GradeMax

(f) (i) Describe **four** sources of uncertainty or limitations of the procedure for this experiment.

For any uncertainties in measurement that you describe, you should state the quantity being measured and a reason for the uncertainty.

1 .....

.....

2 .....

.....

3 .....

.....

4 .....

..... [4]

(ii) Describe **four** improvements that could be made to this experiment. You may suggest the use of other apparatus or different procedures.

1 .....

.....

2 .....

.....

3 .....

.....

4 .....

..... [4]

[Total: 20]

Permission to reproduce items where third-party owned material protected by copyright is included has been sought and cleared where possible. Every reasonable effort has been made by the publisher (Cambridge University Press & Assessment) to trace copyright holders, but if any items requiring clearance have unwittingly been included, the publisher will be pleased to make amends at the earliest possible opportunity.

To avoid the issue of disclosure of answer-related information to candidates, all copyright acknowledgements are reproduced online in our Copyright Acknowledgements Booklet. This is produced for each series of examinations and is freely available to download at www.cambridgeinternational.org after the live examination series.

Cambridge International Education is the name of our awarding body and a part of Cambridge University Press & Assessment, which is a department of the University of Cambridge.

© Cambridge University Press & Assessment 2026

DO NOT WRITE IN THIS MARGIN DO NOT WRITE IN THIS MARGIN DO NOT WRITE IN THIS MARGIN DO NOT WRITE IN THIS MARGIN