GradeMax

* 0000800000001 * DFD

CAMBRIDGE
International Education

Cambridge International AS & A Level

CANDIDATE NAME

CENTRE NUMBER

CANDIDATE NUMBER

7027190526

PHYSICS **9702/42**

Paper 4 A Level Structured Questions **February/March 2026**

2 hours

You must answer on the question paper.

No additional materials are needed.

INSTRUCTIONS

- Answer **all** questions.
- Use a black or dark blue pen. You may use an HB pencil for any diagrams or graphs.
- Write your name, centre number and candidate number in the boxes at the top of the page.
- Write your answer to each question in the space provided.
- Do **not** use an erasable pen. Do **not** use correction fluid or tape.
- Do **not** write on any bar codes.
- You may use a calculator.
- You should show all your working and use appropriate units.

INFORMATION

- The total mark for this paper is 100.
- The number of marks for each question or part question is shown in brackets [ ].

This document has **24** pages. Any blank pages are indicated.

DC (SL/TC) 356453/3
© Cambridge University Press & Assessment 2026

[Turn over

GradeMax

Data

acceleration of free fall	$g = 9.81\ \text{m s}^{-2}$
speed of light in free space	$c = 3.00 \times 10^{8}\ \text{m s}^{-1}$
elementary charge	$e = 1.60 \times 10^{-19}\ \text{C}$
unified atomic mass unit	$1\ \text{u} = 1.66 \times 10^{-27}\ \text{kg}$
rest mass of proton	$m_\text{p} = 1.67 \times 10^{-27}\ \text{kg}$
rest mass of electron	$m_\text{e} = 9.11 \times 10^{-31}\ \text{kg}$
Avogadro constant	$N_\text{A} = 6.02 \times 10^{23}\ \text{mol}^{-1}$
molar gas constant	$R = 8.31\ \text{J K}^{-1}\ \text{mol}^{-1}$
Boltzmann constant	$k = 1.38 \times 10^{-23}\ \text{J K}^{-1}$
gravitational constant	$G = 6.67 \times 10^{-11}\ \text{N m}^2\ \text{kg}^{-2}$
permittivity of free space	$\varepsilon_0 = 8.85 \times 10^{-12}\ \text{F m}^{-1}$ $\left(\frac{1}{4\pi\varepsilon_0} = 8.99 \times 10^{9}\ \text{m F}^{-1}\right)$
Planck constant	$h = 6.63 \times 10^{-34}\ \text{J s}$
Stefan–Boltzmann constant	$\sigma = 5.67 \times 10^{-8}\ \text{W m}^{-2}\ \text{K}^{-4}$

Formulae

uniformly accelerated motion	$s = ut + \frac{1}{2}at^2$ $v^2 = u^2 + 2as$
hydrostatic pressure	$\Delta p = \rho g \Delta h$
upthrust	$F = \rho g V$
Doppler effect for sound waves	$f_\text{o} = \frac{f_\text{s} v}{v \pm v_\text{s}}$
electric current	$I = Anvq$
resistors in series	$R = R_1 + R_2 + \ldots$
resistors in parallel	$\frac{1}{R} = \frac{1}{R_1} + \frac{1}{R_2} + \ldots$

© Cambridge University Press & Assessment 2026

DO NOT WRITE IN THIS MARGIN
DO NOT WRITE IN THIS MARGIN
DO NOT WRITE IN THIS MARGIN
DO NOT WRITE IN THIS MARGIN
DO NOT WRITE IN THIS MARGIN

GradeMax

DO NOT WRITE IN THIS MARGIN
DO NOT WRITE IN THIS MARGIN
DO NOT WRITE IN THIS MARGIN
DO NOT WRITE IN THIS MARGIN
DO NOT WRITE IN THIS MARGIN

gravitational potential	$\phi = -\frac{GM}{r}$
gravitational potential energy	$E_P = -\frac{GMm}{r}$
pressure of an ideal gas	$p = \frac{1}{3}\frac{Nm}{V}\langle c^2 \rangle$
simple harmonic motion	$a = -\omega^2 x$
velocity of particle in s.h.m.	$v = v_0 \cos \omega t$ $v = \pm \omega \sqrt{(x_0^2 - x^2)}$
electric potential	$V = \frac{Q}{4\pi\varepsilon_0 r}$
electrical potential energy	$E_P = \frac{Qq}{4\pi\varepsilon_0 r}$
capacitors in series	$\frac{1}{C} = \frac{1}{C_1} + \frac{1}{C_2} + ...$
capacitors in parallel	$C = C_1 + C_2 + ...$
discharge of a capacitor	$x = x_0 e^{-\frac{t}{RC}}$
Hall voltage	$V_H = \frac{BI}{ntq}$
alternating current/voltage	$x = x_0 \sin \omega t$
radioactive decay	$x = x_0 e^{-\lambda t}$
decay constant	$\lambda = \frac{0.693}{t_{\frac{1}{2}}}$
intensity reflection coefficient	$\frac{I_R}{I_0} = \frac{(Z_1 - Z_2)^2}{(Z_1 + Z_2)^2}$
Stefan–Boltzmann law	$L = 4\pi\sigma r^2 T^4$
Doppler redshift	$\frac{\Delta\lambda}{\lambda} \approx \frac{\Delta f}{f} \approx \frac{v}{c}$

PapaCambridge papacambridge.com

1 **(a)** Define the radian.

.....

..... [1]

(b) Three children are playing on a roundabout (rotatable horizontal platform) at a playground. Child X is standing on the edge of the roundabout. This child is pushing so that the edge of the roundabout moves in a circle at a constant speed of $2.4\,\text{m}\,\text{s}^{-1}$, as shown in the view from above in Figure 1.1.

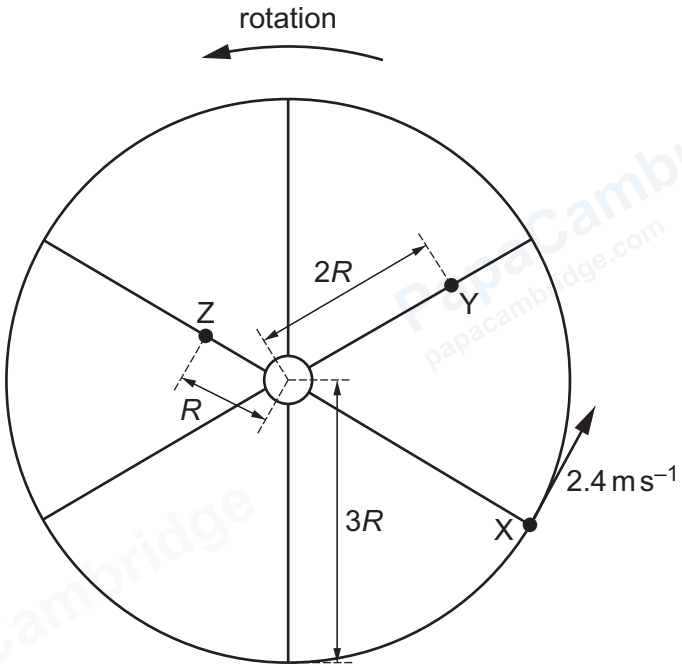

Figure 1.1

The radius of the roundabout is $3R$.
Child Y is sitting on the roundabout at a distance $2R$ from the centre.
Child Z is sitting at a distance R from the centre.

Child Y is moving in a circle with an angular speed of $0.75\,\text{rad}\,\text{s}^{-1}$.

Calculate:

(i) the radius of the roundabout

radius = ... m [2]

© Cambridge University Press & Assessment 2026

GradeMax
DO NOT WRITE IN THIS MARGIN
DO NOT WRITE IN THIS MARGIN
DO NOT WRITE IN THIS MARGIN
DO NOT WRITE IN THIS MARGIN
DO NOT WRITE IN THIS MARGIN

GradeMax

(ii) the frequency of rotation of the roundabout

frequency = ... Hz [2]

(iii) the centripetal acceleration of child Y.

acceleration = ... $m\,s^{-2}$ [2]

(c) For the roundabout in **1(b)**, complete Table 1.1 to compare the linear and angular velocities for child X and child Z at any instant in time. Indicate your response by placing one tick (✓) in the appropriate box for each of magnitude and direction for the two quantities.

Table 1.1

	magnitude			**direction**	
	X less than Z	**equal**	**X greater than Z**	**same**	**opposite**
linear velocity					
angular velocity					

[3]

[Total: 10]

DO NOT WRITE IN THIS MARGIN
DO NOT WRITE IN THIS MARGIN
DO NOT WRITE IN THIS MARGIN
DO NOT WRITE IN THIS MARGIN
DO NOT WRITE IN THIS MARGIN

2 **(a)** Define electric field at a point.

.....

..... [1]

(b) An oil droplet has charge of magnitude Q. The droplet is held in equilibrium by the electric field between two horizontal parallel plates, as shown in Figure 2.1.

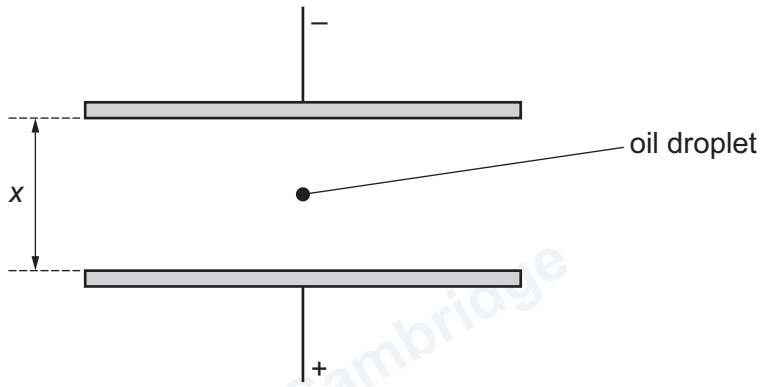

Figure 2.1

The electric field is created by a potential difference (p.d.) V between the plates, with the lower plate at the higher electric potential. The separation of the plates is x.

(i) On Figure 2.1, draw four field lines to represent the electric field between the plates. [3]

(ii) Explain, with reference to forces, whether the sign of Q is positive or negative.

.....

.....

..... [2]

DO NOT WRITE IN THIS MARGIN
DO NOT WRITE IN THIS MARGIN
DO NOT WRITE IN THIS MARGIN
DO NOT WRITE IN THIS MARGIN
DO NOT WRITE IN THIS MARGIN

© Cambridge University Press & Assessment 2026

GradeMax

(c) For the oil droplet in **2(b)**, state expressions, in terms of some or all of Q, V and x, for:

(i) the electric field strength E

E = ... [1]

(ii) the weight W of the droplet.

W = ... [1]

(d) The plates in **2(b)** have a p.d. across them of 4800 V and a separation of 0.024 m. The magnitude of the charge on the oil droplet is $3e$, where e is the elementary charge.

Calculate the mass of the oil droplet.

mass = ... kg [2]

(e) The polarity of the p.d. across the plates in **2(b)** is reversed.

Describe and explain the subsequent motion of the oil droplet.

.....

.....

..... [2]

[Total: 12]

DO NOT WRITE IN THIS MARGIN
DO NOT WRITE IN THIS MARGIN
DO NOT WRITE IN THIS MARGIN
DO NOT WRITE IN THIS MARGIN
DO NOT WRITE IN THIS MARGIN

© Cambridge University Press & Assessment 2026

GradeMax

3 **(a)** Define specific latent heat of fusion.

.....

.....

..... [2]

(b) Explain why substances usually have a higher specific latent heat for vaporisation than for fusion.

.....

.....

.....

..... [2]

(c) An ice cube of mass 15.6 g at a temperature of –18 °C is removed from a freezer.

The ice cube is immediately placed in an insulated beaker that contains a mass of 132.4 g of water at a temperature of 34 °C.

The specific heat capacity of water is 4.19 kJ kg^{-1} °C $^{-1}$.
The specific heat capacity of ice is 2.11 kJ kg^{-1} °C $^{-1}$.
The specific latent heat of fusion of water is 336 kJ kg^{-1}.
The beaker has negligible specific heat capacity.
The contents of the beaker are left to reach thermal equilibrium.

Calculate the temperature, in °C, of the water in the beaker when thermal equilibrium is reached.

temperature = ... °C [4]

[Total: 8]

© Cambridge University Press & Assessment 2026

DO NOT WRITE IN THIS MARGIN
DO NOT WRITE IN THIS MARGIN
DO NOT WRITE IN THIS MARGIN
DO NOT WRITE IN THIS MARGIN
DO NOT WRITE IN THIS MARGIN

GradeMax

DO NOT WRITE IN THIS MARGIN
DO NOT WRITE IN THIS MARGIN
DO NOT WRITE IN THIS MARGIN
DO NOT WRITE IN THIS MARGIN
DO NOT WRITE IN THIS MARGIN

4 The first law of thermodynamics may be written as

$$\Delta U = Q + W$$

where W is the work done on a system.

(a) State the meaning, in this equation, of the symbols ΔU and Q.

ΔU .....

Q .....

[2]

(b) An ideal gas at a pressure of 2.0×10^5 Pa has an initial volume of $0.048\,m^3$, an initial thermodynamic temperature of 560 K, and an initial internal energy of 14.4 kJ.

The volume of the gas is reduced at constant pressure to a final volume of $0.012\,m^3$.

(i) Show that the magnitude of the work done on the gas is 7200 J.

[2]

(ii) Explain whether the work done on the gas is positive or negative.

..... [1]

(iii) Explain why the final internal energy of the gas is 3.6 kJ.

.....

.....

..... [2]

(c) For the reduction of the volume of the gas in **4(b)**, calculate Q. Give a unit with your answer.

Q = ... unit ..... [2]

[Total: 9]

© Cambridge University Press & Assessment 2026

5 **(a)** State what is represented by the Avogadro constant.

.....

.....

..... [1]

(b) A gas is in a sealed container that has a fixed volume. The thermodynamic temperature T of the gas is varied.

Figure 5.1 shows how the pressure p of the gas varies with NT, where N is the number of molecules of the gas.

Figure 5.2 shows how the mean-square speed $\langle c^2 \rangle$ of the molecules of the gas varies with T.

Figure 5.3 shows how the total kinetic energy E_K of all the molecules of the gas varies with T.

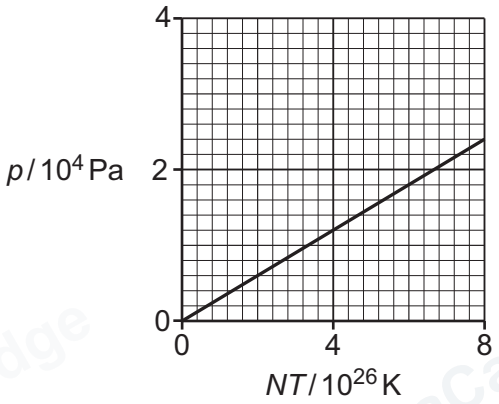

Figure 5.1

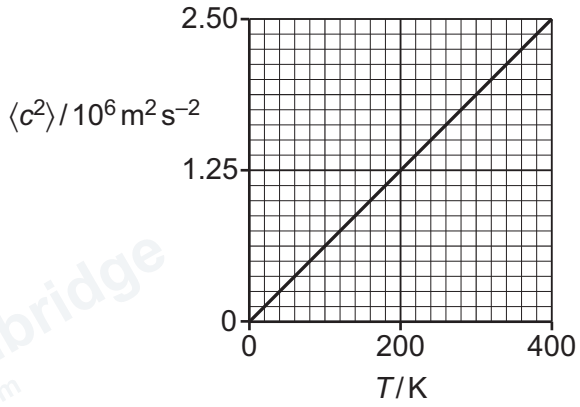

Figure 5.2

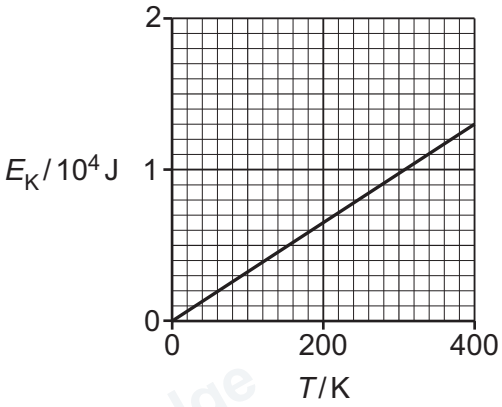

Figure 5.3

© Cambridge University Press & Assessment 2026

DO NOT WRITE IN THIS MARGIN
DO NOT WRITE IN THIS MARGIN
DO NOT WRITE IN THIS MARGIN
DO NOT WRITE IN THIS MARGIN
DO NOT WRITE IN THIS MARGIN

GradeMax

Determine **three** conclusions about the gas that can be drawn from Figure 5.1, Figure 5.2 and Figure 5.3. The conclusions may be qualitative or quantitative. Use the space below for any working.

1 .....

.....

2 .....

.....

3 .....

.....

[3]

(c) One assumption of the kinetic theory of gases is that the volume of the molecules is negligible compared with the volume of the gas.

(i) State, with a reason, whether this assumption applies to the gas in **5(b)**.

.....

..... [1]

(ii) State **two** other assumptions of the kinetic theory of gases.

1 .....

.....

2 .....

.....

[2]

[Total: 7]

DO NOT WRITE IN THIS MARGIN
DO NOT WRITE IN THIS MARGIN
DO NOT WRITE IN THIS MARGIN
DO NOT WRITE IN THIS MARGIN
DO NOT WRITE IN THIS MARGIN

PapaCambridge papacambridge.com

GradeMax

6 **(a)** State what is meant by simple harmonic motion.

.....

.....

..... [2]

(b) A length of thick copper wire is formed into a rectangular frame, as shown in Figure 6.1.

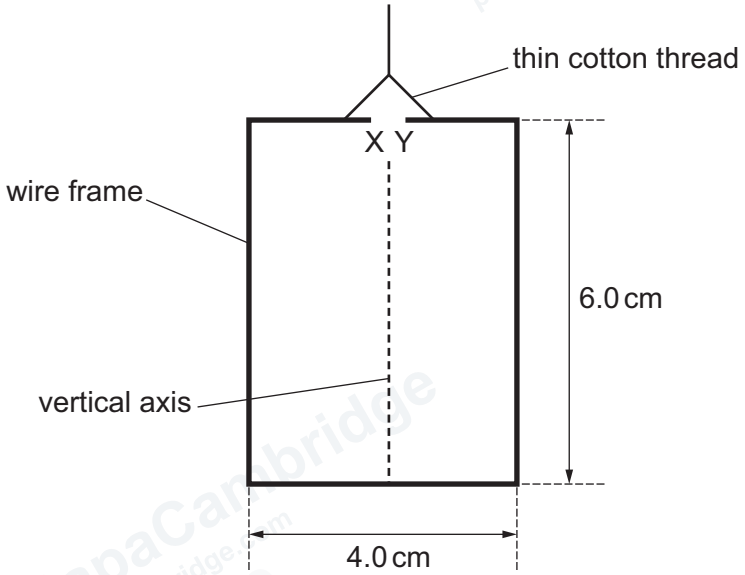

Figure 6.1

The frame has side lengths of 6.0 cm and 4.0 cm.
There is a small gap XY at the ends of the wire at the top of the frame.

The frame is suspended so that it hangs vertically using thin cotton thread attached to the two ends of the wire. The frame oscillates about its vertical axis, as shown in the view from above in Figure 6.2.

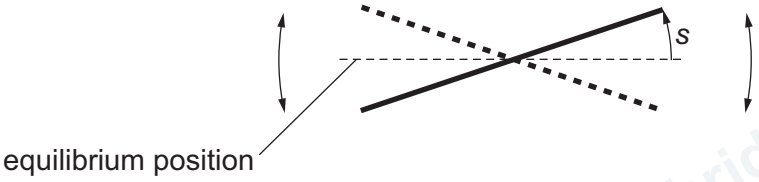

Figure 6.2

The oscillations are simple harmonic. The displacement s of the edge of the frame from its equilibrium position varies with time t according to

$$s = 3.2 \sin 6.9t$$

where s is in mm and t is in s.

© Cambridge University Press & Assessment 2026

DO NOT WRITE IN THIS MARGIN
DO NOT WRITE IN THIS MARGIN
DO NOT WRITE IN THIS MARGIN
DO NOT WRITE IN THIS MARGIN
DO NOT WRITE IN THIS MARGIN

GradeMax

(i) Calculate the period T of the oscillations.

T = ... s [2]

(ii) Show that the maximum speed of the edges of the frame is 22 mm s^{-1}.

[2]

(c) The frame in **6(b)** is in a uniform horizontal magnetic field that is parallel to the equilibrium position of the frame.

The flux density of the magnetic field is 0.047 T.

(i) Calculate the electromotive force (e.m.f.) E_0 induced across XY when the frame is moving at its maximum speed.

E_0 = ... V [3]

(ii) On Figure 6.3, sketch the variation of the induced e.m.f. E across XY with t between $t = 0$ and $t = 2T$.

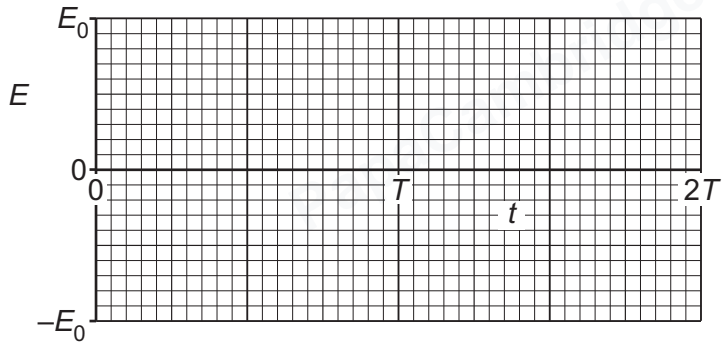

Figure 6.3

[2]

[Total: 11]

© Cambridge University Press & Assessment 2026

DO NOT WRITE IN THIS MARGIN
DO NOT WRITE IN THIS MARGIN
DO NOT WRITE IN THIS MARGIN
DO NOT WRITE IN THIS MARGIN
DO NOT WRITE IN THIS MARGIN

GradeMax

7 **(a)** State what is meant by the root-mean-square (r.m.s.) value of an alternating current.

.....

.....

..... [2]

(b) There is a sinusoidal alternating current in a resistor of resistance 26 Ω. The power P dissipated in the resistor varies with time t as shown in Figure 7.1.

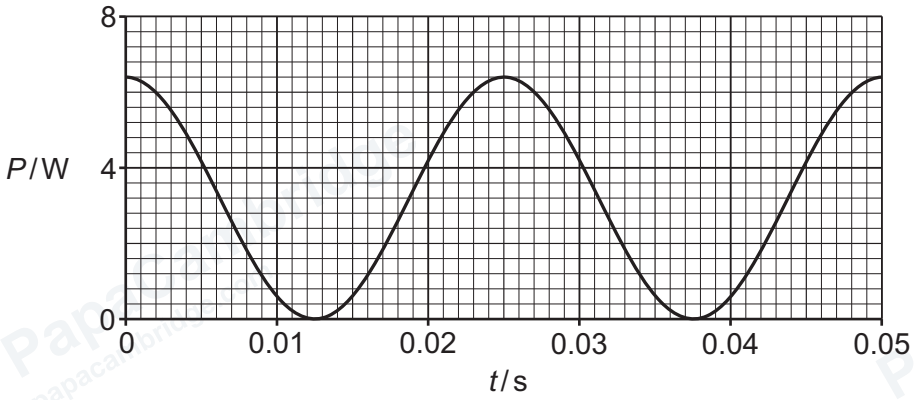

Figure 7.1

(i) Determine the mean power dissipated in the resistor.

mean power = ... W [1]

(ii) Calculate the r.m.s. current in the resistor.

r.m.s. current = ... A [2]

DO NOT WRITE IN THIS MARGIN

© Cambridge University Press & Assessment 2026

GradeMax

(c) The current in the resistor in **7(b)** is now half-wave rectified.

(i) State the name of the electric circuit component that is used to achieve this rectification.

..... [1]

(ii) On Figure 7.2, sketch the variation of the power P dissipated in the resistor between $t = 0$ and $t = 0.050$ s.

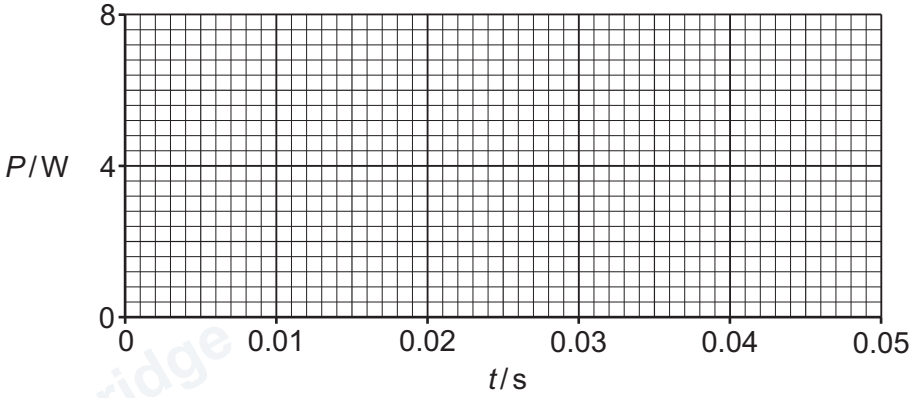

Figure 7.2

[2]

(iii) Determine the r.m.s. current in the resistor. Explain your reasoning.

r.m.s. current = ... A [2]

[Total: 10]

DO NOT WRITE IN THIS MARGIN
DO NOT WRITE IN THIS MARGIN
DO NOT WRITE IN THIS MARGIN
DO NOT WRITE IN THIS MARGIN
DO NOT WRITE IN THIS MARGIN

© Cambridge University Press & Assessment 2026

GradeMax

8 A star in a distant galaxy consists mostly of hydrogen. Visible light emitted by the star consists of discrete spectral absorption lines, as represented in Figure 8.1.

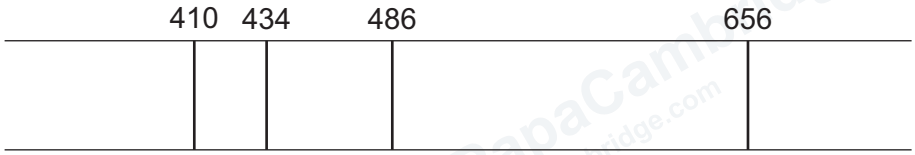

Figure 8.1

The numbers represent the wavelengths, in nm, of the spectral lines.

(a) Explain, with reference to photons, how the existence of these spectral lines provides evidence for discrete electron energy levels in the hydrogen atom.

.....

.....

.....

.....

..... [3]

(b) The galaxy is at a distance of 6.7×10^{24} m from the Earth.

(i) Explain why the spectral lines observed on the Earth are at different wavelengths from those shown in Figure 8.1.

.....

.....

.....

..... [2]

(ii) On Figure 8.1, draw possible positions for the four spectral lines observed on the Earth. [2]

DO NOT WRITE IN THIS MARGIN
DO NOT WRITE IN THIS MARGIN
DO NOT WRITE IN THIS MARGIN
DO NOT WRITE IN THIS MARGIN
DO NOT WRITE IN THIS MARGIN

© Cambridge University Press & Assessment 2026

GradeMax

(iii) The Hubble constant may be taken as $2.1 \times 10^{-18}\,s^{-1}$.

Determine the observed wavelength, in nm, of the lowest frequency spectral line of visible light from the star.

wavelength = ... nm [3]

[Total: 10]

DO NOT WRITE IN THIS MARGIN
DO NOT WRITE IN THIS MARGIN
DO NOT WRITE IN THIS MARGIN
DO NOT WRITE IN THIS MARGIN
DO NOT WRITE IN THIS MARGIN

GradeMax

9 **(a)** State what is meant by radioactive decay.

.....

.....

..... [2]

(b) An isotope X is radioactive and decays to a stable product with a half-life of 12.0 minutes.

A sample of X has an activity of 5.80×10^{14} Bq at time $t = 0$.

(i) Calculate the decay constant of X. Give a unit with your answer.

decay constant = ... unit ..... [2]

(ii) Calculate the activity of the sample at $t = 20.0$ minutes.

activity = ... Bq [2]

DO NOT WRITE IN THIS MARGIN
DO NOT WRITE IN THIS MARGIN
DO NOT WRITE IN THIS MARGIN
DO NOT WRITE IN THIS MARGIN
DO NOT WRITE IN THIS MARGIN

© Cambridge University Press & Assessment 2026

GradeMax

(iii) On Figure 9.1, sketch the variation of the activity A of the sample with t between $t = 0$ and $t = 20.0$ minutes.

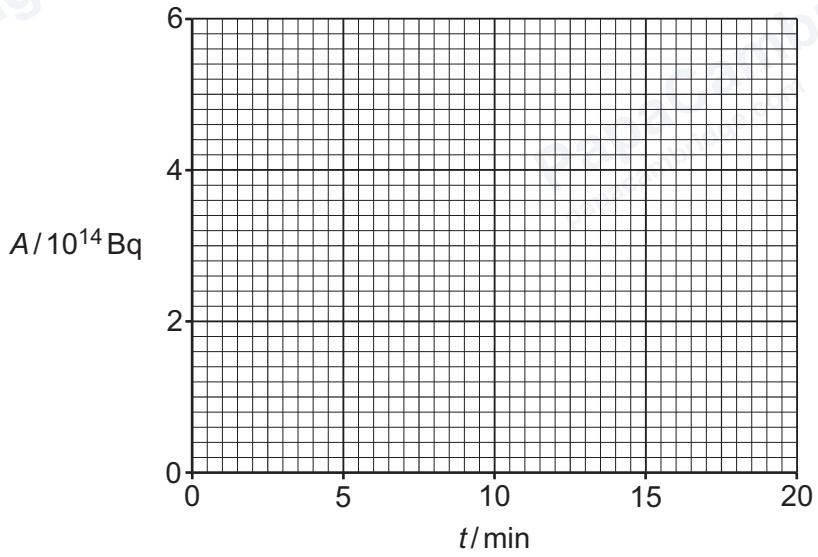

Figure 9.1

[3]

(c) A scientist uses a radiation detector to determine the measured count rate of radiation emitted by the sample in **9(b)**.

Explain why the measured count rate at any given time is less than the activity of the sample.

.....

.....

.....

.....

..... [3]

[Total: 12]

DO NOT WRITE IN THIS MARGIN
DO NOT WRITE IN THIS MARGIN
DO NOT WRITE IN THIS MARGIN
DO NOT WRITE IN THIS MARGIN
DO NOT WRITE IN THIS MARGIN

10 (a) (i) Explain how ultrasound waves are detected by a piezoelectric transducer.

.....

.....

..... [2]

(ii) Define the specific acoustic impedance of a medium.

.....

.....

..... [2]

(b) Table 10.1 lists the specific acoustic impedances Z of air, water and glass.

Table 10.1

medium	Z / kg m^{-2} s^{-1}
air	4.39×10^2
water	1.49×10^6
glass	9.98×10^6

(i) The density of water is 998 kg m^{-3}.

Determine the speed of sound in water.

speed = ... m s^{-1} [2]

DO NOT WRITE IN THIS MARGIN
DO NOT WRITE IN THIS MARGIN
DO NOT WRITE IN THIS MARGIN
DO NOT WRITE IN THIS MARGIN
DO NOT WRITE IN THIS MARGIN

© Cambridge University Press & Assessment 2026

GradeMax

(ii) Calculate, to three significant figures, the intensity reflection coefficient for sound incident on a water-glass boundary.

intensity reflection coefficient = ... [2]

(iii) Explain, without calculation, what happens when sound is incident on an air-glass boundary.

.....

.....

.....

.....

..... [3]

[Total: 11]

DO NOT WRITE IN THIS MARGIN
DO NOT WRITE IN THIS MARGIN
DO NOT WRITE IN THIS MARGIN
DO NOT WRITE IN THIS MARGIN
DO NOT WRITE IN THIS MARGIN

© Cambridge University Press & Assessment 2026

GradeMax

BLANK PAGE

DO NOT WRITE IN THIS MARGIN
DO NOT WRITE IN THIS MARGIN
DO NOT WRITE IN THIS MARGIN
DO NOT WRITE IN THIS MARGIN
DO NOT WRITE IN THIS MARGIN

© Cambridge University Press & Assessment 2026

GradeMax

BLANK PAGE

DO NOT WRITE IN THIS MARGIN
DO NOT WRITE IN THIS MARGIN
DO NOT WRITE IN THIS MARGIN
DO NOT WRITE IN THIS MARGIN
DO NOT WRITE IN THIS MARGIN

© Cambridge University Press & Assessment 2026

GradeMax

BLANK PAGE

DO NOT WRITE IN THIS MARGIN
DO NOT WRITE IN THIS MARGIN
DO NOT WRITE IN THIS MARGIN
DO NOT WRITE IN THIS MARGIN

Permission to reproduce items where third-party owned material protected by copyright is included has been sought and cleared where possible. Every reasonable effort has been made by the publisher (Cambridge University Press & Assessment) to trace copyright holders, but if any items requiring clearance have unwittingly been included, the publisher will be pleased to make amends at the earliest possible opportunity.

To avoid the issue of disclosure of answer-related information to candidates, all copyright acknowledgements are reproduced online in our Copyright Acknowledgements Booklet. This is produced for each series of examinations and is freely available to download at www.cambridgeinternational.org after the live examination series.

Cambridge International Education is the name of our awarding body and a part of Cambridge University Press & Assessment, which is a department of the University of Cambridge.

© Cambridge University Press & Assessment 2026