GradeMax

CAMBRIDGE
International Education

Cambridge International AS & A Level

PHYSICS **9702/11**

Paper 1 Multiple Choice **May/June 2026**

1 hour 15 minutes

You must answer on the multiple choice answer sheet.

You will need: Multiple choice answer sheet
Soft clean eraser
Soft pencil (type B or HB is recommended)

8261081575

INSTRUCTIONS

- There are **forty** questions on this paper. Answer **all** questions.
- For each question there are four possible answers **A**, **B**, **C** and **D**. Choose the **one** you consider correct and record your choice in soft pencil on the multiple choice answer sheet.
- Follow the instructions on the multiple choice answer sheet.
- Write in soft pencil.
- Write your name, centre number and candidate number on the multiple choice answer sheet in the spaces provided unless this has been done for you.
- Do **not** use correction fluid or tape.
- Do **not** write on any bar codes.
- You may use a calculator.

INFORMATION

- The total mark for this paper is 40.
- Each correct answer will score one mark.
- Any rough working should be done on this question paper.

This document has **16** pages. Any blank pages are indicated.

IB26 06_9702_11/FP_R
© Cambridge University Press & Assessment 2026

[Turn over

Data

acceleration of free fall	$g = 9.81\,\text{m s}^{-2}$
speed of light in free space	$c = 3.00 \times 10^{8}\,\text{m s}^{-1}$
elementary charge	$e = 1.60 \times 10^{-19}\,\text{C}$
unified atomic mass unit	$1\,\text{u} = 1.66 \times 10^{-27}\,\text{kg}$
rest mass of proton	$m_\text{p} = 1.67 \times 10^{-27}\,\text{kg}$
rest mass of electron	$m_\text{e} = 9.11 \times 10^{-31}\,\text{kg}$
Avogadro constant	$N_\text{A} = 6.02 \times 10^{23}\,\text{mol}^{-1}$
molar gas constant	$R = 8.31\,\text{J K}^{-1}\,\text{mol}^{-1}$
Boltzmann constant	$k = 1.38 \times 10^{-23}\,\text{J K}^{-1}$
gravitational constant	$G = 6.67 \times 10^{-11}\,\text{N m}^2\,\text{kg}^{-2}$
permittivity of free space	$\varepsilon_0 = 8.85 \times 10^{-12}\,\text{F m}^{-1}$ $\left(\frac{1}{4\pi\varepsilon_0} = 8.99 \times 10^{9}\,\text{m F}^{-1}\right)$
Planck constant	$h = 6.63 \times 10^{-34}\,\text{J s}$
Stefan–Boltzmann constant	$\sigma = 5.67 \times 10^{-8}\,\text{W m}^{-2}\,\text{K}^{-4}$

Formulae

uniformly accelerated motion	$s = ut + \frac{1}{2}at^2$ $v^2 = u^2 + 2as$
hydrostatic pressure	$\Delta p = \rho g \Delta h$
upthrust	$F = \rho g V$
Doppler effect for sound waves	$f_\text{o} = \frac{f_\text{s} v}{v \pm v_\text{s}}$
electric current	$I = Anvq$
resistors in series	$R = R_1 + R_2 + \ldots$
resistors in parallel	$\frac{1}{R} = \frac{1}{R_1} + \frac{1}{R_2} + \ldots$

© Cambridge University Press & Assessment 2026

1 What is an SI base quantity?

A ampere

B charge

C coulomb

D current

2 The surface area of one face of a cube is determined with an uncertainty of ± 1.0%.

This area is used to calculate the volume of the cube.

What is the percentage uncertainty in the calculated volume of the cube?

A ± 1.0% **B** ± 1.5% **C** ± 3.0% **D** ± 6.0%

3 What represents a physical quantity?

A 3.0

B kilogram

C 7 N

D 40%

4 The diagram shows four forces acting on a small object.

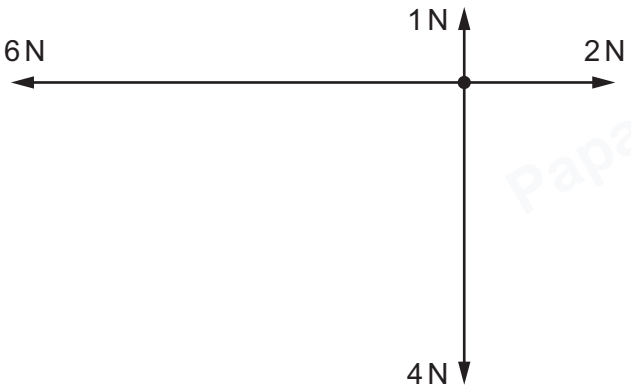

What is the magnitude of the resultant force?

A 1 N **B** 5 N **C** 7 N **D** 13 N

© Cambridge University Press & Assessment 2026

5 A ball is thrown across a flat field.

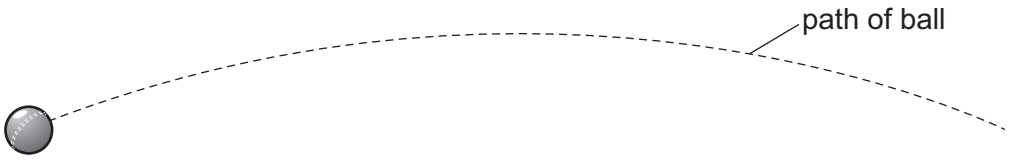

Air resistance is negligible.

Which statement describes the motion of the ball?

A The ball lands with the same velocity at which it is thrown.

B The horizontal component of acceleration is constant throughout the motion.

C The horizontal and vertical components of acceleration are both zero at the highest point of the motion.

D The horizontal and vertical components of velocity are both zero at the highest point of the motion.

6 What is the definition of velocity?

A distance travelled per unit time

B product of acceleration and change in time

C product of frequency and wavelength

D rate of change of displacement

7 A ball is thrown horizontally with a speed of $10.0\,m\,s^{-1}$ above horizontal ground. The ball hits the ground at a time of 3.0 s after being thrown.

Air resistance is negligible.

What is the speed of the ball just before it hits the ground?

A $10\,m\,s^{-1}$ **B** $29\,m\,s^{-1}$ **C** $31\,m\,s^{-1}$ **D** $39\,m\,s^{-1}$

8 A parent and a child run from rest at the bottom of a stairway to the top of the stairway. Both take the same time.

The mass of the parent is greater than the mass of the child.

Which physical quantity for the parent and for the child has the same numerical value as a result of climbing the stairway?

A average kinetic energy

B average velocity

C gravitational potential energy gained

D power generated

© Cambridge University Press & Assessment 2026

GradeMax

9 A book rests on a table. The book has weight *W*.

Newton's third law describes the relationship between pairs of forces.

Which force pairs with *W* to make a Newton's third law pair of forces?

A the contact force acting on the book due to the table

B the contact force acting on the table due to the book

C the friction force between the book and the table

D the gravitational force acting on the Earth due to the book

10 The mass of a fully grown African elephant is approximately four times the mass of an average car.

The maximum speed of an African elephant is 40 km per hour.

What is a reasonable estimate of the maximum momentum of a fully grown African elephant?

A $5 \times 10^3\,\text{kg m s}^{-1}$

B $7 \times 10^4\,\text{kg m s}^{-1}$

C $9 \times 10^5\,\text{kg m s}^{-1}$

D $2 \times 10^6\,\text{kg m s}^{-1}$

11 A ball of mass 0.20 kg is falling vertically through a liquid and has not reached terminal velocity. The upthrust on the ball is 0.65 N.

At one instant, the drag force on the ball is 0.50 N.

What is the magnitude of the resultant force on the ball at this instant?

A 0.81 N **B** 1.5 N **C** 1.8 N **D** 2.0 N

© Cambridge University Press & Assessment 2026

12 The diagram shows the view from above of two hard balls rolling along a horizontal table.

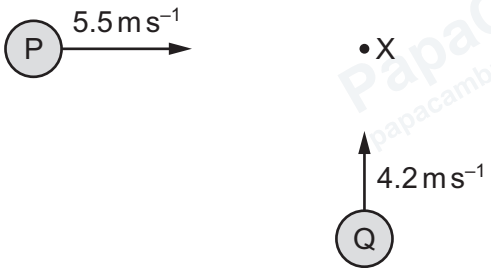

The balls each have a mass of 0.16 kg.

The initial velocity of ball P is 5.5 m s^{-1} and the initial velocity of ball Q is 4.2 m s^{-1}.

The initial velocity of ball P is perpendicular to the initial velocity of ball Q.

The balls collide at point X where ball Q stops immediately.

There are no resistive forces acting on the balls.

What is the speed of ball P after the collision?

A 1.3 m s^{-1} **B** 5.5 m s^{-1} **C** 6.9 m s^{-1} **D** 9.7 m s^{-1}

13 Two forces, each of magnitude F, act on a beam of length x as shown.

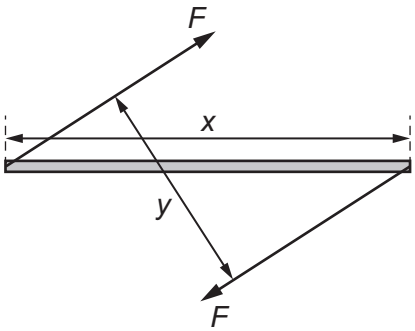

The perpendicular distance between the forces is y and the two forces form a couple.

What is the torque of the couple?

A Fx **B** $2Fx$ **C** Fy **D** $2Fy$

14 An object is submerged in a liquid.

Which statement about the upthrust acting on the object is correct?

A It is proportional to the density of the liquid.

B It is proportional to the density of the object.

C It is proportional to the total depth of the liquid.

D It is proportional to the weight of the object.

© Cambridge University Press & Assessment 2026

15 A horizontal uniform rod of length 10.0 cm is shown.

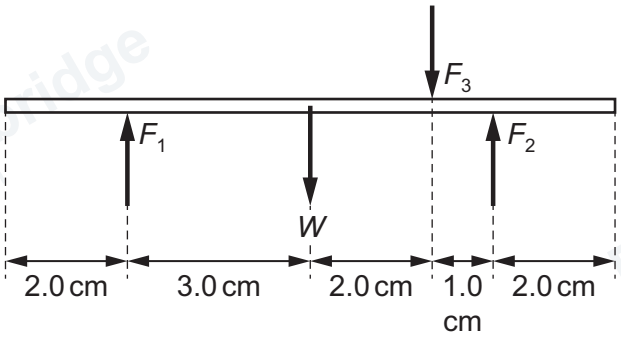

The rod is acted on by its weight W and by three forces F_1, F_2 and F_3.

The rod is in equilibrium. All the forces are vertical.

$$F_2 = \frac{4}{3}F_3$$

What is the ratio $\frac{F_1}{F_2}$?

A $\frac{1}{4}$ **B** $\frac{1}{2}$ **C** 1 **D** 2

16 What is a unit for density?

A $\mathrm{N\,m^{-3}}$ **B** $\mathrm{g\,mm^{-1}}$ **C** $\mathrm{kg\,cm^{-2}}$ **D** $\mathrm{\mu g\,mm^{-3}}$

17 What is meant by the efficiency of a system?

A the difference between the useful energy output from the system and the total energy input

B the difference between the useful energy output from the system and the wasted energy output

C the ratio of the useful energy output from the system to the total energy input

D the ratio of the useful energy output from the system to the wasted energy output

© Cambridge University Press & Assessment 2026

GradeMax

18 Object X is at a small height h above the surface of the Earth and then falls from rest to the surface.

The speed of object X when it reaches the surface of the Earth is v_X.

Object Y is at a small height $2h$ above the surface of the Moon and then falls from rest to the surface.

The speed of object Y when it reaches the surface of the Moon is v_Y.

The acceleration of free fall on the Moon is $1.6\,\text{m}\,\text{s}^{-2}$.

The drag force acting on both objects is negligible.

What is the ratio $\frac{v_X}{v_Y}$?

A 1.0 **B** 1.8 **C** 2.5 **D** 3.1

19 Which equation is **not** required to derive the formula $P = Fv$?

A $W = Fs$ **B** $v = \frac{s}{t}$ **C** $F = ma$ **D** $P = \frac{W}{t}$

20 A metal wire is stretched by a tensile force.

The tensile force is increased.

The volume of the wire remains constant and the limit of proportionality is not exceeded.

Which quantity remains constant?

A the cross-sectional area of the wire

B the strain of the wire

C the stress in the wire

D the Young modulus of the metal

© Cambridge University Press & Assessment 2026

21 The graph shows the variation of the elastic potential energy E_p stored in a spring with the square of the extension of the spring.

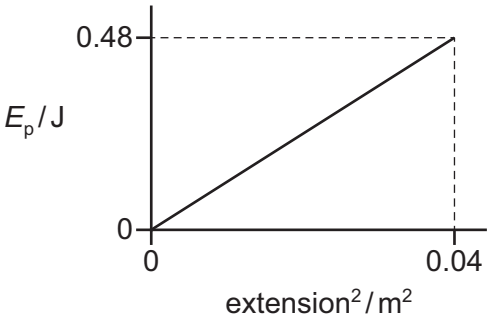

What is the spring constant of the spring?

A $0.0096\,N\,m^{-1}$ **B** $6.0\,N\,m^{-1}$ **C** $12\,N\,m^{-1}$ **D** $24\,N\,m^{-1}$

22 Identical springs are joined in four arrangements.

Which arrangement has the same spring constant as a single spring?

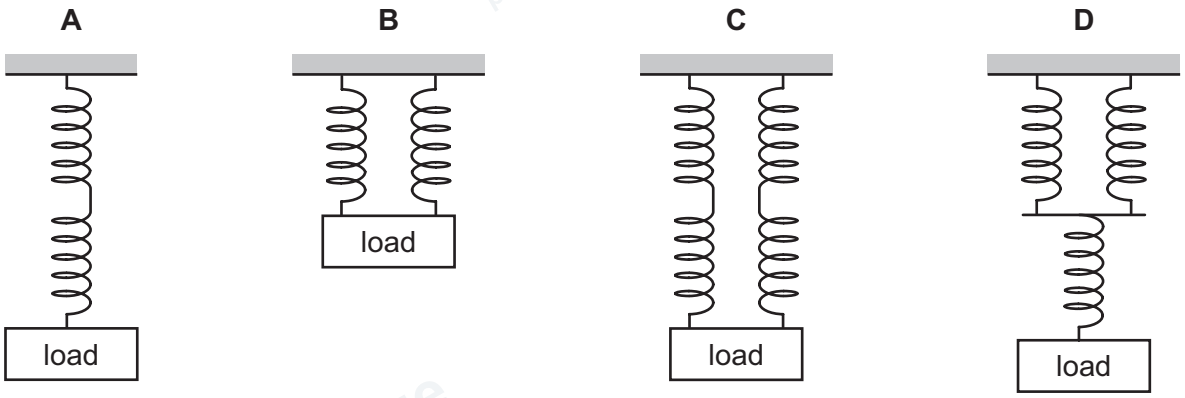

23 A vertically polarised electromagnetic wave has an intensity of $3.2 \times 10^4\,W\,m^{-2}$.

The wave is incident on a polarising filter that has a transmission axis at an angle θ to the vertical.

The transmitted wave has an intensity of $2.5 \times 10^4\,W\,m^{-2}$.

What is θ?

A 28° **B** 39° **C** 52° **D** 62°

© Cambridge University Press & Assessment 2026 **[Turn over**

GradeMax

24 A train is travelling with a constant velocity.

It operates its whistle as it moves directly towards a student.

The whistle emits a continuous sound of constant frequency.

Which graph shows the variation with time t of the frequency f of the sound heard by the student?

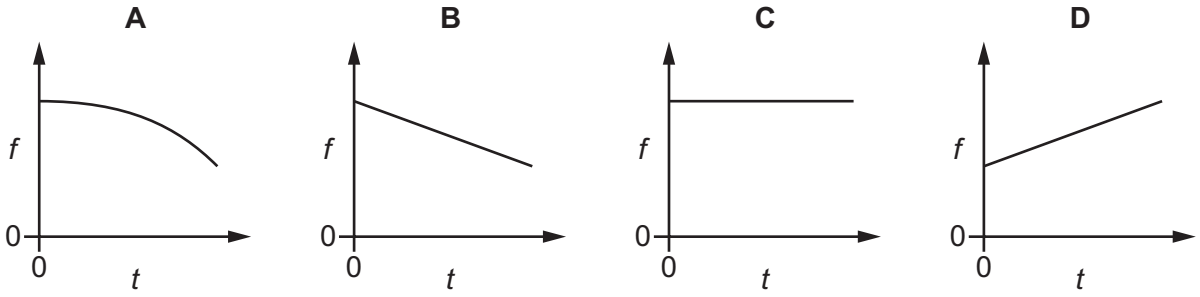

25 An electromagnetic wave in free space has a wavelength of 0.1 nm.

In which principal region of the electromagnetic spectrum does this wave lie?

A infrared

B ultraviolet

C visible

D X-ray

26 A wave is incident on a surface of area S placed perpendicular to the direction of travel of the wave.

The wave has amplitude R and the power incident on the surface is P.

The amplitude of the wave is increased to $3R$ and the wave is now incident normally on a surface of area $3S$.

What is the power incident on the surface of area $3S$?

A P **B** $3P$ **C** $9P$ **D** $27P$

© Cambridge University Press & Assessment 2026

GradeMax

27 A string is stretched between a vibration generator and a fixed point.

When the vibration generator is vibrating at a frequency *f*, a stationary wave with five nodes is created on the stretched string, as shown. There is a node at the end of the string that is attached to the vibration generator.

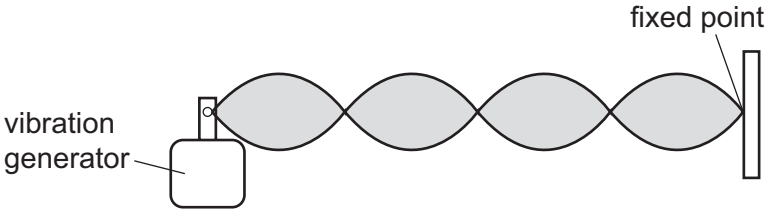

The frequency of vibration of the vibration generator is slowly increased.

What is the next frequency that produces a stationary wave on the string?

A 1.25*f* **B** 1.50*f* **C** 1.75*f* **D** 2.00*f*

28 Water waves of wavelength λ are incident normally on an obstacle with a narrow gap. The width of the gap is equal to λ. The waves from the gap emerge over an angle θ as shown.

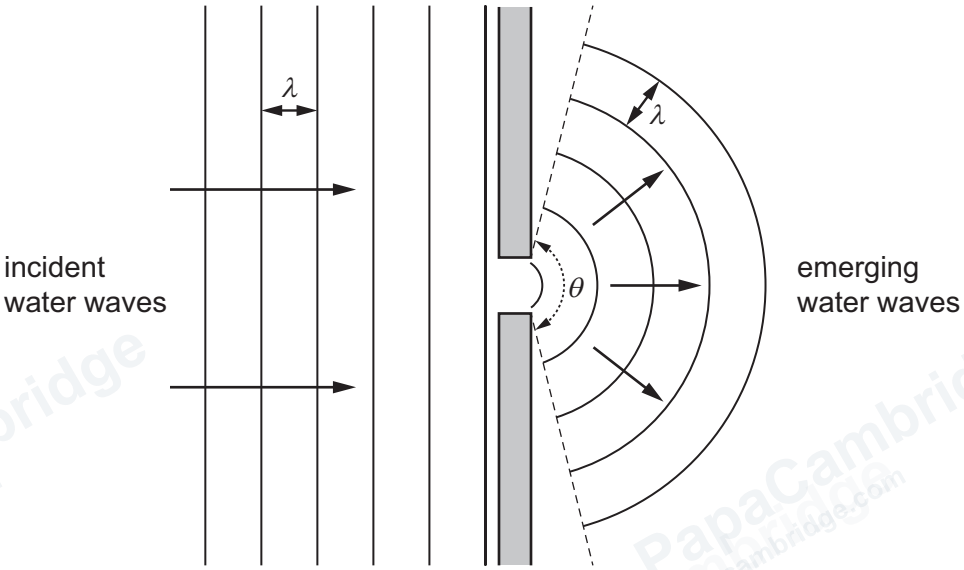

The gap is slowly widened.

Which changes, if any, occur to θ and to the wavelength of the emerging waves?

	θ	wavelength
A	decreases	remains the same
B	increases	remains the same
C	remains the same	decreases
D	remains the same	increases

© Cambridge University Press & Assessment 2026

GradeMax

29 What is a condition for two sources of waves to produce an interference pattern?

A The waves must be electromagnetic waves.

B The waves must be emitted with a constant phase difference.

C The waves must be emitted with the same amplitude.

D The waves must be emitted with the same intensity.

30 Green light of wavelength 550 nm passes through a double slit. This produces an interference pattern with a fringe spacing of 5.0 cm on a screen.

Which changes to the experimental arrangement result in a fringe spacing of 2.5 cm?

	slit separation	distance between slits and screen
A	doubled	unchanged
B	unchanged	doubled
C	halved	doubled
D	doubled	halved

31 What is the definition of the potential difference (p.d.) across a component?

A the energy transferred per unit charge

B the energy transferred per unit current

C the power transferred per unit charge

D the power transferred per unit current

32 Several wires of the same fixed length are made of metal of constant resistivity. The wires have different cross-sectional areas.

Which graph represents the variation of the resistance R of the wires with their cross-sectional area A?

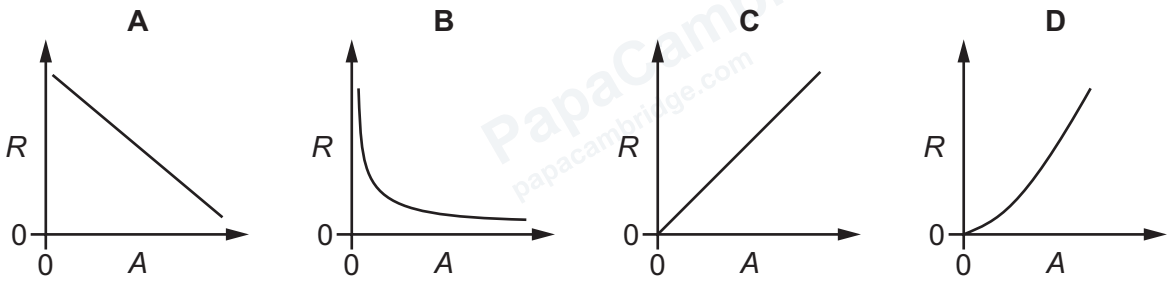

© Cambridge University Press & Assessment 2026

9702/11 Question Pap ine 2026

GradeMax

33 The diagram shows a circuit.

Which resistor dissipates the least power?

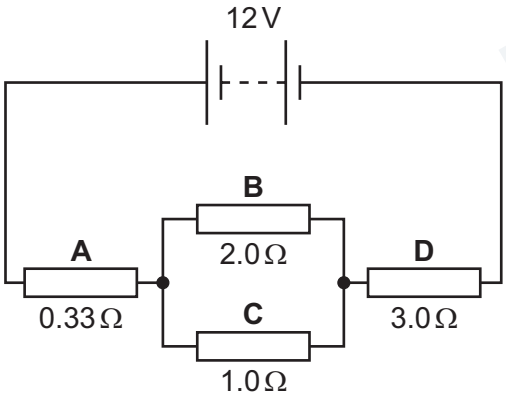

34 There is an electric current of 10 mA in a conductor.

What is the charge that passes a fixed point in the conductor in a time of 50 s?

A 0.5 C **B** 5 C **C** 500 C **D** 5000 C

35 In the diagrams shown, the cells have negligible internal resistance and the wires have negligible resistance.

Which diagram demonstrates Kirchhoff's second law?

A

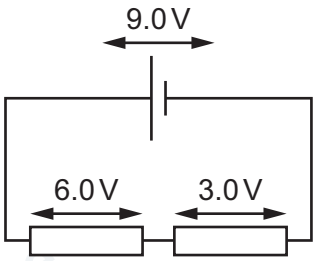

B

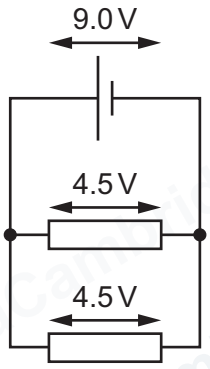

C

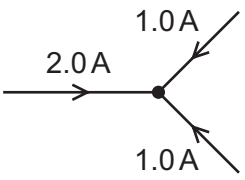

D

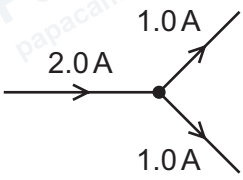

© Cambridge University Press & Assessment 2026 **[Turn over**

36 A circuit consists of a battery, a high-resistance voltmeter and four fixed resistors as shown. The battery has an electromotive force (e.m.f.) of 15.0 V and negligible internal resistance.

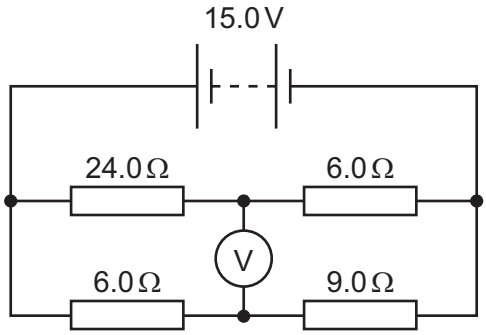

What is the reading on the voltmeter?

A 3.0 V **B** 6.0 V **C** 9.0 V **D** 12.0 V

37 The diagram shows a resistor connected in series with a light-dependent resistor (LDR) and a battery.

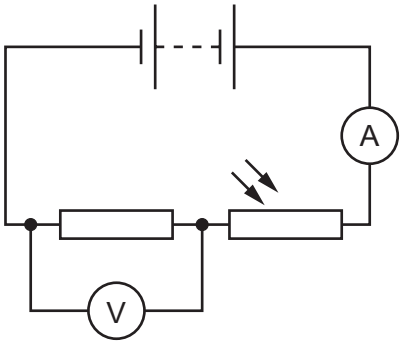

The light intensity incident on the LDR increases.

What is the effect of this change on the voltmeter and ammeter readings?

	voltmeter reading	ammeter reading
A	decreases	decreases
B	decreases	increases
C	increases	decreases
D	increases	increases

© Cambridge University Press & Assessment 2026

GradeMax

38 A stream of identical particles flows between two points.

The stream of particles does **not** form an electric current.

What could the particles be?

A α-particles

B β^- particles

C neutrons

D protons

39 $^{10}_{6}C$ decays by positron emission.

Which nuclide is the product of the decay?

A $^{10}_{5}B$ **B** $^{11}_{5}B$ **C** $^{10}_{6}C$ **D** $^{11}_{6}C$

40 A positively charged meson consists of a quark and an antiquark.

What could be the quark and antiquark?

A charm and antiup

B down and antitop

C strange and antibottom

D up and antistrange

© Cambridge University Press & Assessment 2026

GradeMax

BLANK PAGE

Permission to reproduce items where third-party owned material protected by copyright is included has been sought and cleared where possible. Every reasonable effort has been made by the publisher (Cambridge University Press & Assessment) to trace copyright holders, but if any items requiring clearance have unwittingly been included, the publisher will be pleased to make amends at the earliest possible opportunity.

To avoid the issue of disclosure of answer-related information to candidates, all copyright acknowledgements are reproduced online in our Copyright Acknowledgements Booklet. This is produced for each series of examinations and is freely available to download at www.cambridgeinternational.org after the live examination series.

Cambridge International Education is the name of our awarding body and a part of Cambridge University Press & Assessment, which is a department of the University of Cambridge.

© Cambridge University Press & Assessment 2026