GradeMax

CAMBRIDGE
International Education

Cambridge International AS & A Level

PHYSICS **9702/12**

Paper 1 Multiple Choice **May/June 2026**

1 hour 15 minutes

You must answer on the multiple choice answer sheet.

You will need: Multiple choice answer sheet
Soft clean eraser
Soft pencil (type B or HB is recommended)

INSTRUCTIONS

- There are **forty** questions on this paper. Answer **all** questions.
- For each question there are four possible answers **A**, **B**, **C** and **D**. Choose the **one** you consider correct and record your choice in soft pencil on the multiple choice answer sheet.
- Follow the instructions on the multiple choice answer sheet.
- Write in soft pencil.
- Write your name, centre number and candidate number on the multiple choice answer sheet in the spaces provided unless this has been done for you.
- Do **not** use correction fluid or tape.
- Do **not** write on any bar codes.
- You may use a calculator.

INFORMATION

- The total mark for this paper is 40.
- Each correct answer will score one mark.
- Any rough working should be done on this question paper.

This document has **16** pages.

© Cambridge University Press & Assessment 2026
[Turn over

GradeMax

Data

acceleration of free fall	$g = 9.81\,\text{m s}^{-2}$
speed of light in free space	$c = 3.00 \times 10^{8}\,\text{m s}^{-1}$
elementary charge	$e = 1.60 \times 10^{-19}\,\text{C}$
unified atomic mass unit	$1\,\text{u} = 1.66 \times 10^{-27}\,\text{kg}$
rest mass of proton	$m_\text{p} = 1.67 \times 10^{-27}\,\text{kg}$
rest mass of electron	$m_\text{e} = 9.11 \times 10^{-31}\,\text{kg}$
Avogadro constant	$N_\text{A} = 6.02 \times 10^{23}\,\text{mol}^{-1}$
molar gas constant	$R = 8.31\,\text{J K}^{-1}\,\text{mol}^{-1}$
Boltzmann constant	$k = 1.38 \times 10^{-23}\,\text{J K}^{-1}$
gravitational constant	$G = 6.67 \times 10^{-11}\,\text{N m}^2\,\text{kg}^{-2}$
permittivity of free space	$\varepsilon_0 = 8.85 \times 10^{-12}\,\text{F m}^{-1}$ $\left(\frac{1}{4\pi\varepsilon_0} = 8.99 \times 10^{9}\,\text{m F}^{-1}\right)$
Planck constant	$h = 6.63 \times 10^{-34}\,\text{J s}$
Stefan–Boltzmann constant	$\sigma = 5.67 \times 10^{-8}\,\text{W m}^{-2}\,\text{K}^{-4}$

Formulae

uniformly accelerated motion	$s = ut + \frac{1}{2}at^2$ $v^2 = u^2 + 2as$
hydrostatic pressure	$\Delta p = \rho g \Delta h$
upthrust	$F = \rho g V$
Doppler effect for sound waves	$f_\text{o} = \frac{f_\text{s} v}{v \pm v_\text{s}}$
electric current	$I = Anvq$
resistors in series	$R = R_1 + R_2 + \ldots$
resistors in parallel	$\frac{1}{R} = \frac{1}{R_1} + \frac{1}{R_2} + \ldots$

© Cambridge University Press & Assessment 2026

GradeMax

1 Which row correctly identifies scalar and vector quantities?

	scalar quantities	vector quantities
A	energy and work	momentum and power
B	energy and momentum	force and power
C	energy and power	force and momentum
D	momentum and power	force and velocity

2 What are the base units for intensity?

A $\mathrm{kg\,s^{-3}}$ **B** $\mathrm{kg\,s}$ **C** $\mathrm{kg\,m^2\,s^{-3}}$ **D** $\mathrm{kg\,m^4\,s^{-3}}$

3 Three coplanar forces, P, Q and R, act at a point.

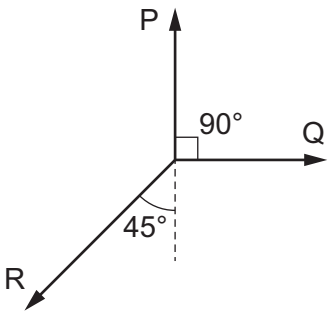

The three forces are in equilibrium.

The magnitude of P is increased by 10%. The directions of the forces are unchanged.

Which percentage increase, if any, is required to the magnitudes of Q and R for the forces to be once again in equilibrium?

	% increase in magnitude of Q	% increase in magnitude of R
A	10	10
B	0	10
C	$10\sqrt{2}$	$10\sqrt{2}$
D	10	$10\sqrt{2}$

© Cambridge University Press & Assessment 2026

GradeMax

4 A metal rod is exactly 62.00 cm long. The length of the rod is measured using two different devices, X and Y.

The reading on device X is 61.5 cm.

The reading on device Y is 62.65 cm.

Which device gives the more precise reading for the length, and which device gives the more accurate reading for the length?

	more precise reading	**more accurate reading**
A	X	X
B	X	Y
C	Y	X
D	Y	Y

5 One object moves directly from P to R.

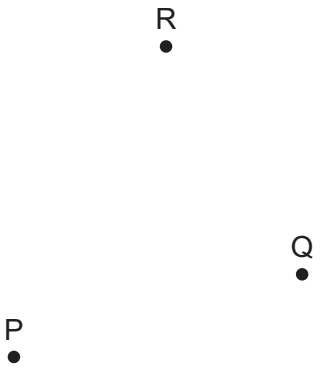

In a shorter time, a second object moves from P to Q to R.

Which statement about the two objects is correct for the journey from P to R?

A They have the same average speed.

B They have the same average velocity.

C They have the same displacement.

D They travel the same distance.

© Cambridge University Press & Assessment 2026

6 A small glider moves along a horizontal air track as shown.

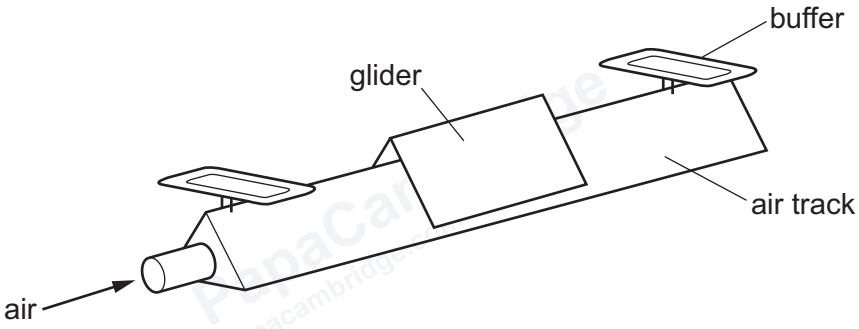

At each end of the air track, the glider has a perfectly elastic collision with a fixed buffer.

The glider moves at a constant speed between collisions.

Which graph represents the variation with time t of the velocity v of the glider as it moves between the two buffers?

A

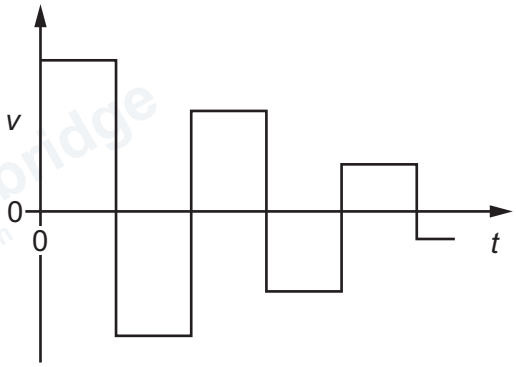

B

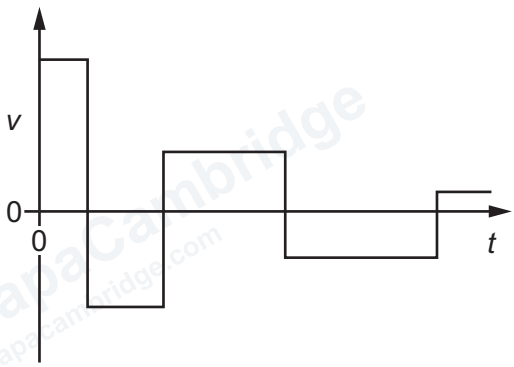

C

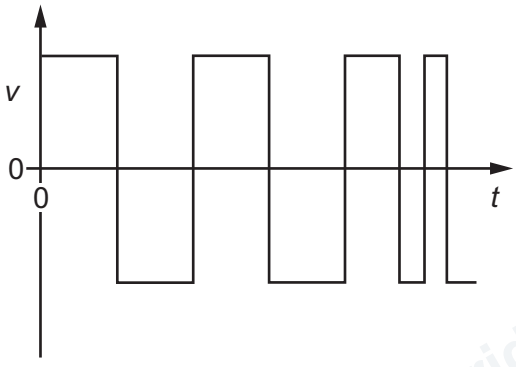

D

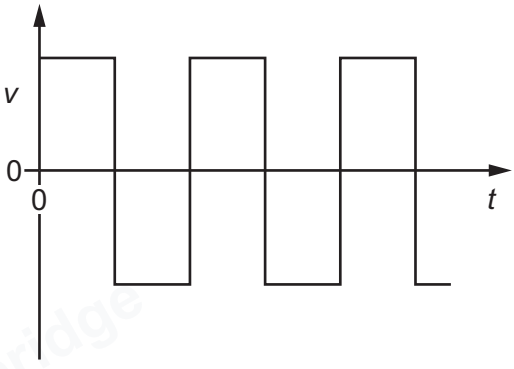

© Cambridge University Press & Assessment 2026 **[Turn over**

GradeMax

7 The diagram shows an arrangement to stop trains that are travelling too fast.



Trains coming from the left travel at a speed of 50 m s^{-1}. At marker 1, the driver must apply the brakes so that the train decelerates uniformly in order to pass marker 2 at no more than 10 m s^{-1}.

The train carries a detector that notes the times when the train passes each marker and will apply an emergency brake if the time between passing marker 1 and marker 2 is less than 20 s.

How far from marker 2 should marker 1 be placed?

A 200 m **B** 400 m **C** 500 m **D** 600 m

8 An experiment is performed to measure the acceleration of free fall *g*. A body falls between two fixed points. Four measurements are taken.

Which measurement is **not** required for the calculation of *g*?

A the distance fallen by the body

B the initial velocity of the body

C the mass of the body

D the time taken for the body to fall

9 What is the definition of linear momentum?

A force per unit time

B mass per unit velocity

C product of force and time

D product of mass and velocity

10 A hollow steel object is dropped from rest in air. The object reaches a terminal velocity *v* before hitting the ground.

Which change results in an increase in the terminal velocity?

A Drop a solid steel object of the same dimensions from the same height.

B Drop the object from a greater height.

C Throw the object downwards from the same height with an initial velocity 0.5*v*.

D Throw the object upwards from the same height with an initial velocity 0.5*v*.

© Cambridge University Press & Assessment 2026

11 A bowling ball of mass 4.50 kg falls a short distance vertically into a tray of sand.

The bowling ball decelerates uniformly in the sand.

The deceleration of the bowling ball when it is in contact with the sand is $8.00 \times 10^2\,\text{m s}^{-2}$.

What is the magnitude of the force exerted on the bowling ball by the sand as it decelerates?

A 44.1 N **B** 3560 N **C** 3600 N **D** 3640 N

12 Which statement is **not** a requirement of a pair of forces that obey Newton's third law of motion?

A The forces act in opposite directions.

B The forces act on different objects.

C The forces act on objects in contact.

D The forces are of equal magnitude.

13 A hydrometer is a device for measuring the density of liquids. It consists of a weighted bulb at the bottom of a calibrated tube.

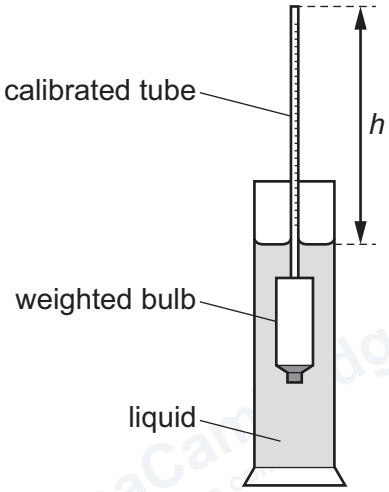

The hydrometer is floating in a liquid at room temperature. The length of the tube above the level of the liquid is *h*.

Which change causes *h* to decrease?

A adding more liquid into the cylinder

B decreasing the density of the liquid

C increasing the air pressure above the liquid

D increasing the density of the liquid

© Cambridge University Press & Assessment 2026 **[Turn over**

GradeMax

14 Torque is the result of a pair of forces acting to cause a turning effect. Torque is calculated as the product of force and distance.

Which row gives the correct description of the force and the distance used to calculate the torque of a couple?

	force	distance
A	the magnitude of one force	the perpendicular distance between the two forces
B	the sum of the magnitudes of both forces	the perpendicular distance between the two forces
C	the magnitude of one force	the perpendicular distance from one force to the mid-point between the forces
D	the resultant of the two forces	the perpendicular distance from one force to the mid-point between the forces

15 The density of paper is 800 kg m^{-3}. A typical sheet of paper has a width of 210 mm and a length of 300 mm.

The thickness of a pack of 500 sheets of paper is 50 mm.

What is the mass of a single sheet of paper?

A 0.5 g **B** 5 g **C** 50 g **D** 500 g

16 Which statement about equilibrium is correct?

A If a system is in equilibrium then there must be no forces acting on it.

B If a system is in equilibrium then there must be no resultant torque on it.

C If there are no moments due to forces acting on a system then it must be in equilibrium.

D If there is no resultant force acting on a system then it must be in equilibrium.

17 An object of weight 3.0 N is moved vertically at a constant velocity *v* by an electric motor.

The electric motor has an efficiency of 25%.

The object travels a vertical distance of 1.2 m in 3.0 s.

Assume that the useful output energy of the motor is equal to the increase in gravitational potential energy of the object.

What is the electric power supplied to the motor?

A 0.3 W **B** 1.2 W **C** 4.8 W **D** 30 W

© Cambridge University Press & Assessment 2026

GradeMax

18 An alpha particle has 2.2×10^{-13} J of kinetic energy.

What is the speed of the alpha particle?

A $4.1 \times 10^{6}\,\text{m s}^{-1}$

B $5.8 \times 10^{6}\,\text{m s}^{-1}$

C $8.1 \times 10^{6}\,\text{m s}^{-1}$

D $1.2 \times 10^{7}\,\text{m s}^{-1}$

19 An initially unstretched spring is stretched within its limit of proportionality to a length of 80 mm.

The work done stretching the spring is 0.010 J.

The spring constant of the spring is $22.5\,\text{N m}^{-1}$.

What is the unstretched length of the spring?

A 30 mm **B** 50 mm **C** 60 mm **D** 110 mm

20 What is meant by elastic deformation of a wire under tension?

A deformation for which the elastic potential energy is proportional to the extension

B deformation for which the extension is proportional to the tensile force

C deformation for which the extension remains constant as the tensile force is removed

D deformation for which the extension returns to zero when the tensile force is removed

© Cambridge University Press & Assessment 2026

21 The graph shows the variation of force with extension for a metal object deformed within its limit of proportionality.

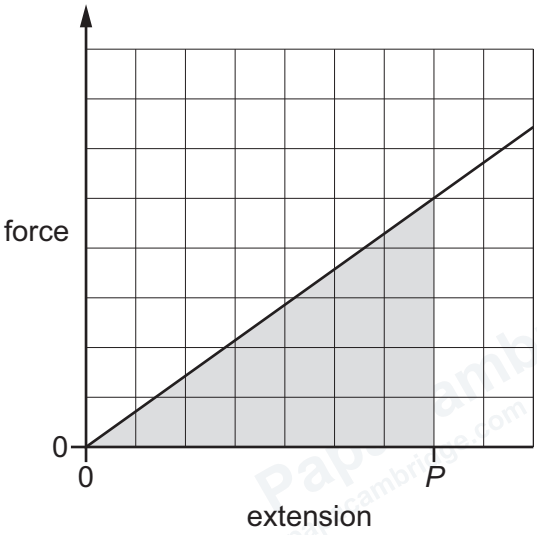

What does the shaded area represent?

A the elastic limit of the object

B the elastic potential energy stored in the object at an extension of *P*

C the spring constant of the object

D the Young modulus of the metal at an extension of *P*

22 What is the order of these principal regions of the electromagnetic spectrum from shortest to longest wavelength?

A infrared radiation, visible light, ultraviolet radiation

B ultraviolet radiation, infrared radiation, visible light

C ultraviolet radiation, visible light, infrared radiation

D visible light, ultraviolet radiation, infrared radiation

© Cambridge University Press & Assessment 2026

23 The graph shows the displacement of each particle in a transverse wave against distance at one instant in time.

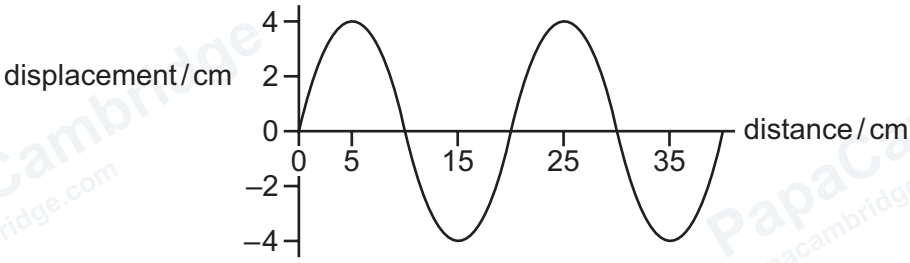

The speed of the wave is $1.6\,\text{m}\,\text{s}^{-1}$.

What is the frequency of the wave?

A 0.050 Hz **B** 0.080 Hz **C** 5.0 Hz **D** 8.0 Hz

24 The siren on an emergency vehicle emits a sound of constant frequency 1100 Hz.

The driver in a stationary car hears the sound at a frequency of 1000 Hz.

The speed of sound in air is $340\,\text{m}\,\text{s}^{-1}$.

What is the velocity of the emergency vehicle?

A $31\,\text{m}\,\text{s}^{-1}$ away from the stationary car

B $34\,\text{m}\,\text{s}^{-1}$ away from the stationary car

C $31\,\text{m}\,\text{s}^{-1}$ towards the stationary car

D $34\,\text{m}\,\text{s}^{-1}$ towards the stationary car

25 A source of sound of constant power P is situated in an open space. The intensity I of sound at distance r from this source is given by the equation shown.

$$I = \frac{P}{4\pi r^2}$$

How does the amplitude a of the vibrating air molecules vary with the distance r from the source?

A $a \propto \frac{1}{r}$ **B** $a \propto \frac{1}{r^2}$ **C** $a \propto r$ **D** $a \propto r^2$

© Cambridge University Press & Assessment 2026 **[Turn over**

26 Water waves diffract as they pass through a gap.

Which combination produces the greatest amount of diffraction?

	wavelength / m	gap width / m
A	10^{-1}	10^{0}
B	10^{-1}	10^{-2}
C	10^{0}	10^{0}
D	10^{0}	10^{2}

27 The diagram shows a beam of light of wavelength λ_X that is incident normally on a diffraction grating.

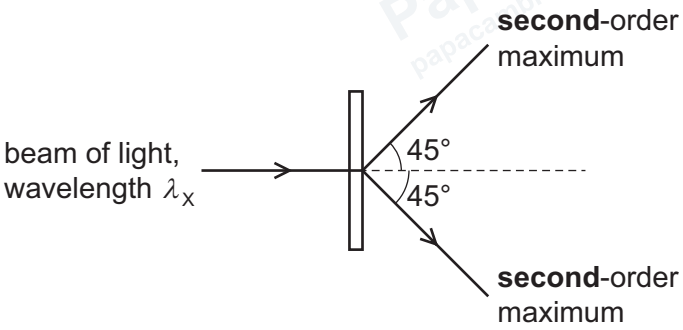

The diagram shows only the **second**-order intensity maxima that are produced at an angle of 45° to the direction of the incident beam of light.

A replacement beam of light of a different wavelength λ_Y is now incident normally on the diffraction grating. This new wavelength also produces intensity maxima that are at an angle of 45° to the direction of the incident beam of light.

What is a possible value of the ratio $\frac{\lambda_X}{\lambda_Y}$?

A 0.25 **B** 0.75 **C** 1.25 **D** 1.50

© Cambridge University Press & Assessment 2026

GradeMax

28 A stationary sound wave is formed in a tube of length *L* that is closed at one end.

The diagram shows the positions of the nodes and antinodes of the stationary wave.

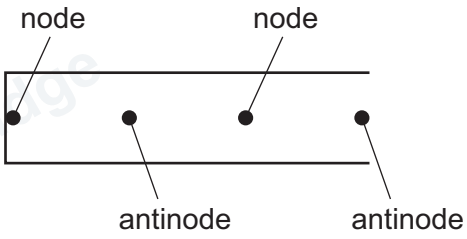

Which graph shows the variation of the amplitude *a* of the wave with distance *x* measured from the closed end of the tube?

A

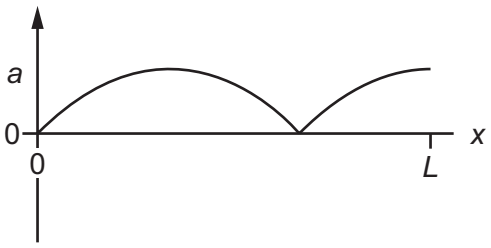

B

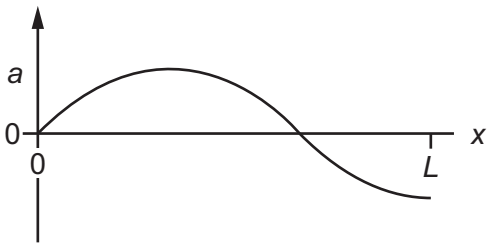

C

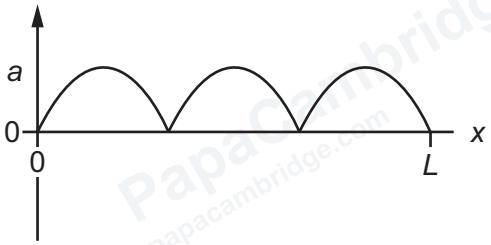

D

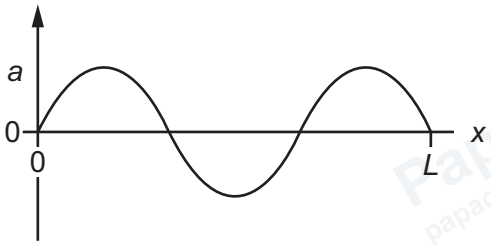

29 Waves are emitted by two coherent sources. The two waves meet at point X where they have a constant phase difference of 180°.

At point X, the amplitude of one of the waves is 0.50 m and the amplitude of the other wave is 0.30 m. The waves superpose.

What is the amplitude of the resultant wave at point X?

A 0 m **B** 0.20 m **C** 0.40 m **D** 0.80 m

30 There is a current in a resistor for an unknown time.

Which two quantities can be used to calculate the energy dissipated by the resistor?

A the current in the resistor and the potential difference across the resistor

B the resistance of the resistor and the current in the resistor

C the total charge passing through the resistor and the potential difference across the resistor

D the total charge passing through the resistor and the resistance of the resistor

© Cambridge University Press & Assessment 2026

31 The diagram shows a metal block.

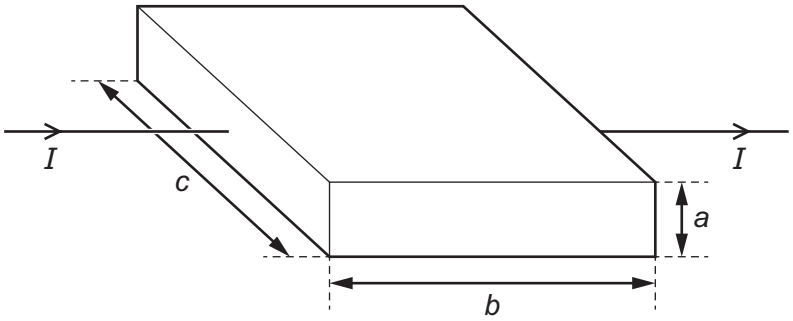

The block has sides of length *a*, *b* and *c* as shown, and its volume is *V*. Each charge carrier has a charge –*q* and the number density of the charge carriers in the metal is *n*. It takes each charge carrier an average time of *t* to pass through the block.

What is an expression for the current *I*?

A $I = nqabc$ **B** $I = \frac{nqV}{t}$ **C** $I = \frac{nqbc}{t}$ **D** $I = nqaV$

32 An electrical component is connected into a circuit.

Which component and which change causes an increase in the resistance of the component?

	component	change
A	filament lamp	increase in electric current
B	light-dependent resistor (LDR)	increase in light intensity
C	semiconductor diode	increase in electric current
D	thermistor	increase in temperature

33 A metal wire with circular cross-section has length *L* and diameter *d*.

The resistance of the wire is *R*.

The wire is now melted and reformed into a new wire of diameter 0.50*d*.

The volume of the wire is unchanged.

What is the resistance of the new wire?

A *R* **B** 2*R* **C** 4*R* **D** 16*R*

© Cambridge University Press & Assessment 2026

GradeMax

34 A battery with internal resistance is connected by wires to an external resistor.

Which statement describes the electromotive force (e.m.f.) of the battery?

A It is the energy transferred per unit charge in driving charge through a connecting wire.

B It is the energy transferred per unit charge in driving charge through the complete circuit.

C It is the energy transferred per unit charge in driving charge through the external resistor.

D It is the energy transferred per unit charge in driving charge through the internal resistance.

35 The diagram shows a circuit with a battery connected to a resistor with a resistance of 4.0 Ω.

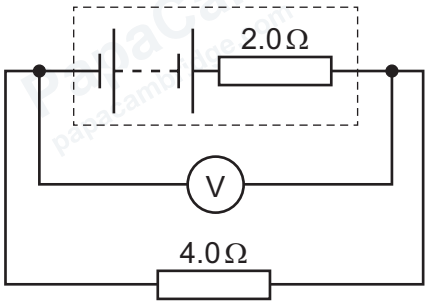

The battery has an internal resistance of 2.0 Ω.

The voltmeter reads 12 V.

A second resistor of resistance 4.0 Ω is connected in parallel to the first resistor.

What is the new reading on the voltmeter?

A 6.0 V **B** 9.0 V **C** 12 V **D** 24 V

36 Kirchhoff's first and second laws are a consequence of the conservation of different quantities.

What are those quantities?

	Kirchhoff's first law	Kirchhoff's second law
A	charge	energy
B	energy	current
C	current	charge
D	energy	charge

Permission to reproduce items where third-party owned material protected by copyright is included has been sought and cleared where possible. Every reasonable effort has been made by the publisher (Cambridge University Press & Assessment) to trace copyright holders, but if any items requiring clearance have unwittingly been included, the publisher will be pleased to make amends at the earliest possible opportunity.

To avoid the issue of disclosure of answer-related information to candidates, all copyright acknowledgements are reproduced online in our Copyright Acknowledgements Booklet. This is produced for each series of examinations and is freely available to download at www.cambridgeinternational.org after the live examination series.

Cambridge International Education is the name of our awarding body and a part of Cambridge University Press & Assessment, which is a department of the University of Cambridge.

© Cambridge University Press & Assessment 2026

37 A battery of electromotive force (e.m.f.) 18.0 V and negligible internal resistance is connected to a network of three fixed resistors as shown.

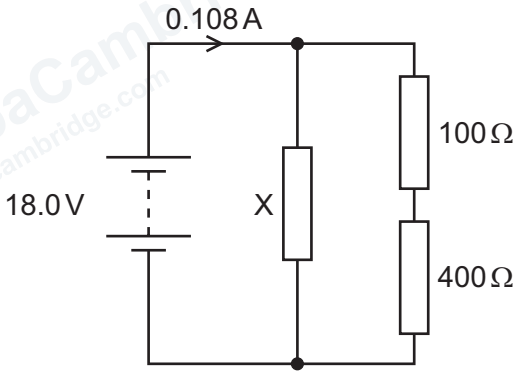

The current in the battery is 0.108 A.

What is the resistance of resistor X?

A 125 Ω **B** 167 Ω **C** 250 Ω **D** 500 Ω

38 A nucleus P undergoes β^+ decay, becoming nucleus Q and emitting two particles X and Y as shown.

$$P \rightarrow Q + X + Y$$

Which two particles are X and Y?

A electron and antineutrino

B electron and neutrino

C positron and antineutrino

D positron and neutrino

39 Which particle is a lepton?

A neutrino

B proton

C strange antiquark

D up quark

40 A nucleus decays in a series of stages.

At each stage, an α-particle or β^- particle is emitted.

Which sequence of emitted particles forms a nucleus that is an isotope of the original nucleus?

A $\alpha, \alpha, \beta^-, \beta^-$ **B** β^-, β^-, α **C** $\alpha, \alpha, \alpha, \alpha$ **D** $\beta^-, \beta^-, \beta^-$

© Cambridge University Press & Assessment 2026