GradeMax

CAMBRIDGE
International Education

Cambridge International AS & A Level

PHYSICS **9702/14**

Paper 1 Multiple Choice **May/June 2026**

1 hour 15 minutes

You must answer on the multiple choice answer sheet.

You will need: Multiple choice answer sheet
Soft clean eraser
Soft pencil (type B or HB is recommended)

INSTRUCTIONS

- There are **forty** questions on this paper. Answer **all** questions.
- For each question there are four possible answers **A**, **B**, **C** and **D**. Choose the **one** you consider correct and record your choice in soft pencil on the multiple choice answer sheet.
- Follow the instructions on the multiple choice answer sheet.
- Write in soft pencil.
- Write your name, centre number and candidate number on the multiple choice answer sheet in the spaces provided unless this has been done for you.
- Do **not** use correction fluid or tape.
- Do **not** write on any bar codes.
- You may use a calculator.

INFORMATION

- The total mark for this paper is 40.
- Each correct answer will score one mark.
- Any rough working should be done on this question paper.

This document has **20** pages. Any blank pages are indicated.

IB26 06_9702_14/4RP
© Cambridge University Press & Assessment 2026

[Turn over

Data

acceleration of free fall	$g = 9.81\,\text{m s}^{-2}$
speed of light in free space	$c = 3.00 \times 10^{8}\,\text{m s}^{-1}$
elementary charge	$e = 1.60 \times 10^{-19}\,\text{C}$
unified atomic mass unit	$1\,\text{u} = 1.66 \times 10^{-27}\,\text{kg}$
rest mass of proton	$m_\text{p} = 1.67 \times 10^{-27}\,\text{kg}$
rest mass of electron	$m_\text{e} = 9.11 \times 10^{-31}\,\text{kg}$
Avogadro constant	$N_\text{A} = 6.02 \times 10^{23}\,\text{mol}^{-1}$
molar gas constant	$R = 8.31\,\text{J K}^{-1}\,\text{mol}^{-1}$
Boltzmann constant	$k = 1.38 \times 10^{-23}\,\text{J K}^{-1}$
gravitational constant	$G = 6.67 \times 10^{-11}\,\text{N m}^2\,\text{kg}^{-2}$
permittivity of free space	$\varepsilon_0 = 8.85 \times 10^{-12}\,\text{F m}^{-1}$ $\left(\frac{1}{4\pi\varepsilon_0} = 8.99 \times 10^{9}\,\text{m F}^{-1}\right)$
Planck constant	$h = 6.63 \times 10^{-34}\,\text{J s}$
Stefan–Boltzmann constant	$\sigma = 5.67 \times 10^{-8}\,\text{W m}^{-2}\,\text{K}^{-4}$

Formulae

uniformly accelerated motion	$s = ut + \frac{1}{2}at^2$ $v^2 = u^2 + 2as$
hydrostatic pressure	$\Delta p = \rho g \Delta h$
upthrust	$F = \rho g V$
Doppler effect for sound waves	$f_\text{o} = \frac{f_\text{s} v}{v \pm v_\text{s}}$
electric current	$I = Anvq$
resistors in series	$R = R_1 + R_2 + \ldots$
resistors in parallel	$\frac{1}{R} = \frac{1}{R_1} + \frac{1}{R_2} + \ldots$

© Cambridge University Press & Assessment 2026

GradeMax

1 What is an example of a measurement of a physical quantity?

A newton

B power

C 6.4%

D 9.6 J

2 An object has a mass of (10.00 ± 0.04) g.

What is the percentage uncertainty in the value of the mass?

A 0.004% **B** 0.04% **C** 0.4% **D** 4%

3 What is a reasonable estimate for the volume of a fully-inflated spherical football?

A 6000 mm^3 **B** 60 cm^3 **C** 6000 cm^3 **D** 0.60 m^3

4 At temperatures close to 0 K, the specific heat capacity c of a particular solid is given by $c = bT^3$, where T is the temperature and b is a constant, characteristic of the solid.

The SI unit of specific heat capacity is $J\,kg^{-1}\,K^{-1}$.

What is the unit of constant b, expressed in SI base units?

A $m^2\,s^{-2}\,K^{-3}$

B $m^2\,s^{-2}\,K^{-4}$

C $kg\,m^2\,s^{-2}\,K^{-3}$

D $kg\,m^2\,s^{-2}\,K^{-4}$

© Cambridge University Press & Assessment 2026

5 An athlete runs at a constant speed in a straight line to a point X.

At X, the athlete changes direction and runs back in a straight line to the starting point at the same constant speed.

Assume that the athlete changes direction instantaneously.

Which velocity–time graph represents the motion of the athlete?

A

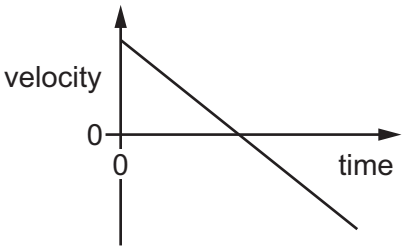

B

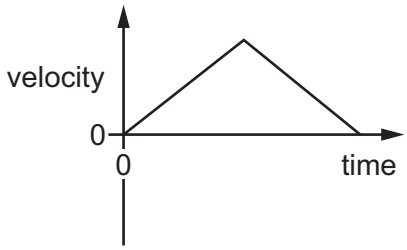

C

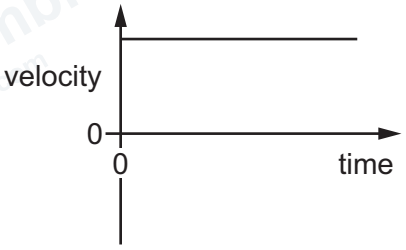

D

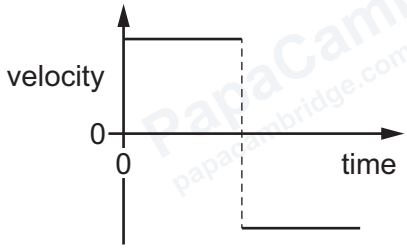

6 A stone is thrown vertically upwards from a point that is 12 m above the sea. It then falls into the sea below after 3.4 s.

Air resistance is negligible.

At which speed is the stone released when it is thrown?

A $3.5\,m\,s^{-1}$ **B** $6.6\,m\,s^{-1}$ **C** $13\,m\,s^{-1}$ **D** $20\,m\,s^{-1}$

© Cambridge University Press & Assessment 2026

7 At time $t = 0$, an object moves from rest with constant acceleration in a straight line. At time t, the object is distance s from its rest position.

A graph is drawn of s against t^2 as shown.

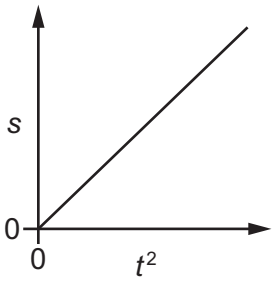

Which statement describes the acceleration of the object?

A It is equal to half the value of the gradient of the graph.

B It is equal to the value of the gradient of the graph.

C It is equal to twice the value of the gradient of the graph.

D It is equal to the reciprocal of the gradient of the graph.

8 A skydiver is falling at terminal velocity.

The skydiver opens her parachute.

Which quantity increases in magnitude immediately after the skydiver opens her parachute?

A the resultant force acting on the skydiver

B the velocity of the skydiver

C the distance between the skydiver and the ground

D the weight of the skydiver

9 A car of mass m is travelling with a velocity v.

The velocity of the car is increased by Δv due to a constant resultant force F acting for a time t.

What is a correct expression for t?

A $t = \frac{mv + m\Delta v}{F}$ **B** $t = \frac{m\Delta v}{F}$ **C** $t = \frac{F}{m\Delta v}$ **D** $t = \frac{F}{mv + m\Delta v}$

© Cambridge University Press & Assessment 2026

10 A ball is dropped onto horizontal ground and bounces vertically upwards. When the ball is in contact with the ground, the following forces act:

- the weight W of the ball
- the contact force P exerted on the ground by the ball
- the contact force N exerted on the ball by the ground.

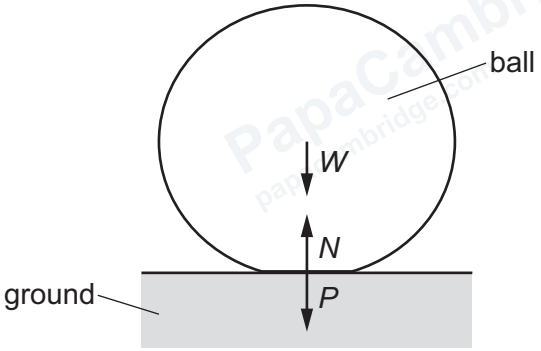

When the ball is in contact with the ground, the ball is momentarily stationary.

At this instant, which relationship is correct?

A $N = P + W$ **B** $N > P$ **C** $N = W$ **D** $N > W$

11 The diagram shows two particles in motion.

Particle X has mass $4M$ and is travelling with velocity v.

Particle Y has mass M and is travelling with velocity $3v$.

The paths of the particles are perpendicular.

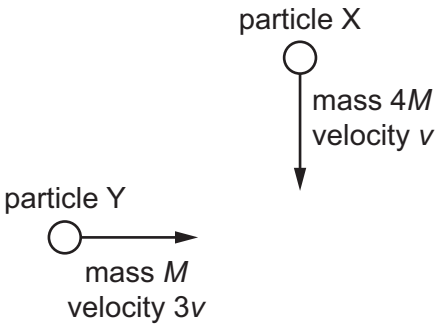

The two particles collide and stick together to form a combined particle. No external forces act on the particles.

What is the magnitude of the momentum of the combined particle after the collision?

A Mv **B** $4Mv$ **C** $5Mv$ **D** $7Mv$

© Cambridge University Press & Assessment 2026

GradeMax

12 An object is maintained in equilibrium by three coplanar forces.

Which statement is **not** correct?

A The acceleration of the object must be zero.

B The resultant force acting on the object must be zero.

C The resultant moment of any two forces about the point of action of the third force must be zero.

D The velocity of the object must be zero.

13 Which row describes an object that is floating in equilibrium in water?

	upthrust on object	hydrostatic pressure on object
A	equal to volume of water displaced	not equal at all points
B	equal to volume of water displaced	equal at all points
C	equal to weight of water displaced	not equal at all points
D	equal to weight of water displaced	equal at all points

© Cambridge University Press & Assessment 2026

14 A pair of forces acts on a uniform disc pivoted at its centre of gravity P.

The diagrams show pairs of forces and the distances between their points of action.

Which pair of forces forms a couple with a torque of 1.4 N m?

A

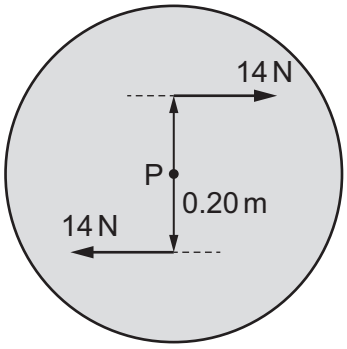

B

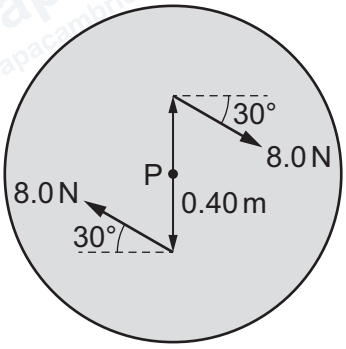

C

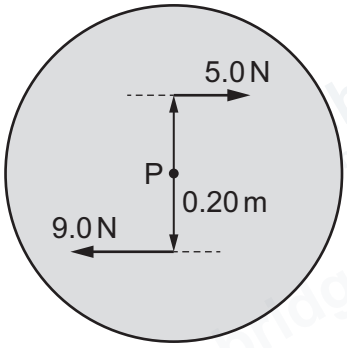

D

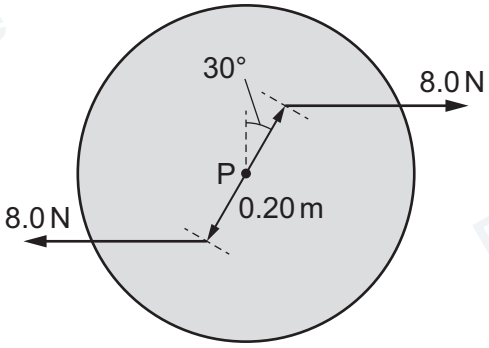

15 Concrete has a density of 2400 kg m^{-3}.

What is the mass of concrete that fills a rectangular space of dimensions 0.080 m × 0.90 m × 1.10 m?

A 79 kg **B** 190 kg **C** 790 kg **D** 1900 kg

16 An electric motor raises an object of mass m at a constant speed v through a height h in time t.

The acceleration of free fall is g.

What is the change in energy of the object in time t?

A mgh **B** $mgh + \frac{1}{2}mv^2$ **C** mgv **D** $\frac{mgv}{t}$

© Cambridge University Press & Assessment 2026

17 An object is released from rest at time $t = 0$ and falls downwards through a long distance.

Air resistance is negligible.

Which graph shows the variation of the kinetic energy E_K of the object with time t?

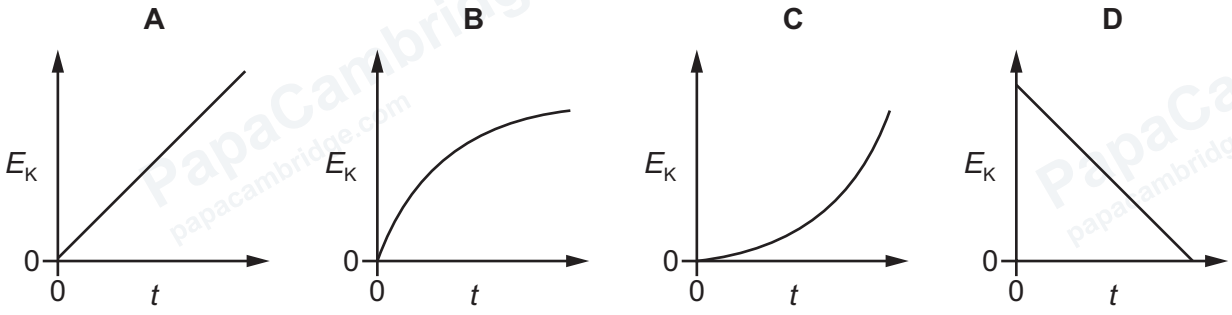

18 Which product of two quantities is equal to power?

A force × distance

B force × velocity

C work done × time

D work done × velocity

19 A student tests two wires X and Y by hanging a series of masses on them and measuring the extensions of the wires.

The student concludes that X has a smaller spring constant than Y.

Which result supports this conclusion?

A X has a greater extension for the same mass when obeying Hooke's law than Y.

B X supports a greater maximum mass before breaking than Y.

C Y has a greater extension at its elastic limit than X.

D Y stops obeying Hooke's law for a smaller mass than X.

© Cambridge University Press & Assessment 2026

20 The diagram shows a force–extension graph for a spring.

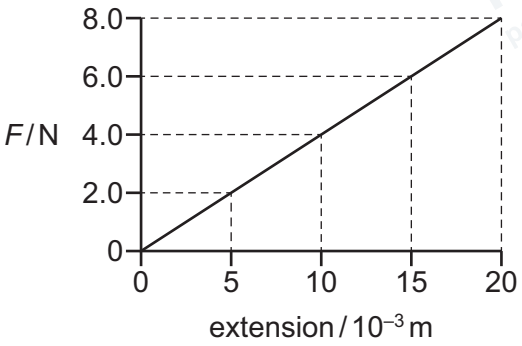

What is the value of the work done to increase the extension of the spring from 10×10^{-3} m to 20×10^{-3} m?

A 0.02 J **B** 0.06 J **C** 0.08 J **D** 0.12 J

21 A wire is extended by different forces. The wire obeys Hooke's law.

A graph is plotted to show the variation of a quantity *y* with a quantity *x*.

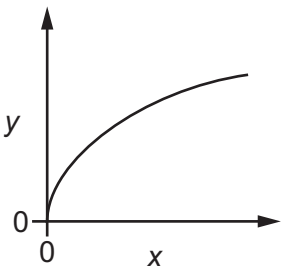

What could quantities *x* and *y* represent?

	x	***y***
A	elastic potential energy	extension
B	extension	force
C	force	extension
D	extension	elastic potential energy

22 What is the definition of the Young modulus of a material?

A force per unit extension

B product of force and extension

C product of stress and strain

D stress per unit strain

© Cambridge University Press & Assessment 2026

23 A police car has a two-tone siren emitting sound of frequencies of 700 Hz and 1000 Hz.

The police car is travelling at a speed of 40.0 m s^{-1} towards a stationary observer. The speed of sound in the air is 340 m s^{-1}.

What is the difference between the two frequencies of the sound that is heard by the observer?

A 268 Hz **B** 300 Hz **C** 335 Hz **D** 340 Hz

24 A beam of plane-polarised light of intensity I_0 is incident normally on a polarising filter. The initial intensity of the transmitted light is zero.

The filter is then rotated through 360° whilst remaining normal to the beam.

Which graph shows how the intensity of the transmitted light varies with the angle of the filter to its original position?

A

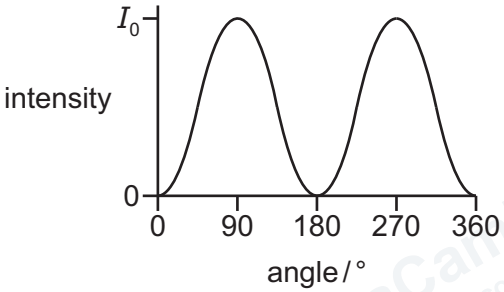

B

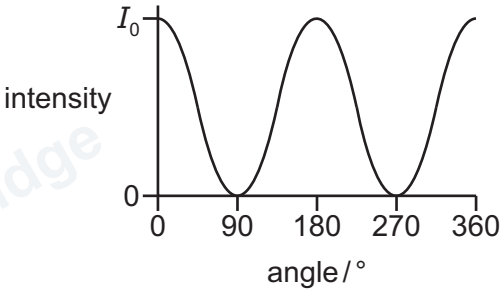

C

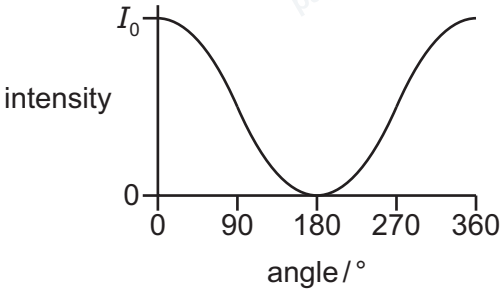

D

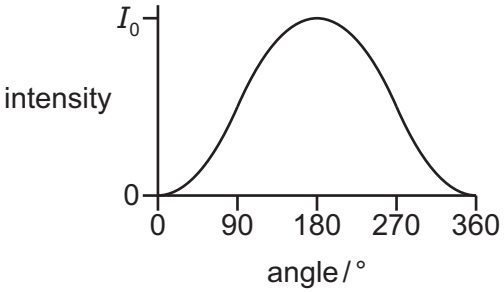

25 Which statement about transverse waves is correct?

A Transverse waves can diffract.

B All transverse waves have nodes and antinodes.

C Sound in air is an example of a transverse wave.

D Transverse waves **cannot** be formed on a spring.

© Cambridge University Press & Assessment 2026

26 Bees can see electromagnetic radiation in free space with wavelength in the range 300 nm to 650 nm.

Which range of wavelength of electromagnetic radiation in free space is visible to both humans and bees?

A 300 nm to 700 nm

B 300 nm to 650 nm

C 400 nm to 650 nm

D 400 nm to 700 nm

27 The diagram shows an object floating in water through which a progressive wave is passing.

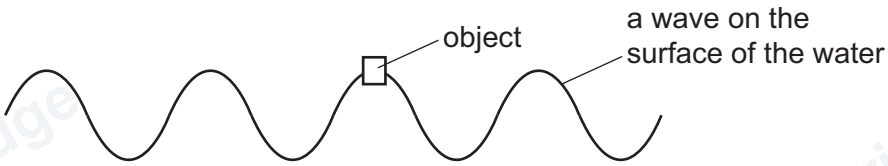

In time *t*, the object moves from maximum displacement at a peak of the wave to minimum displacement at a trough and then back to maximum displacement again.

Through which vertical distance does the object move in time *t*?

A one wavelength

B twice the wavelength

C twice the amplitude

D four times the amplitude

28 Two waves of the same type travelling in a medium meet at a point.

Which statement describes the principle of superposition?

A The resultant amplitude of the two waves at that point is equal to the sum of the amplitudes of the individual waves.

B The resultant displacement of the two waves at that point is equal to the sum of the displacements of the individual waves.

C The resultant frequency of the two waves at that point is equal to the sum of the frequencies of the individual waves.

D The resultant intensity of the two waves at that point is equal to the sum of the intensities of the individual waves.

© Cambridge University Press & Assessment 2026

GradeMax

29 Light of wavelength 500 nm is incident normally on a double slit.

A flat screen is placed parallel to the plane of the double slit. The screen is at a distance of 3.5 m from the double slit.

A series of bright and dark fringes is formed on the screen.

The distance from the centre of the first bright fringe to the centre of the tenth bright fringe is 22 mm.

What is the separation of the two slits?

A 0.080 mm **B** 0.35 mm **C** 0.72 mm **D** 0.80 mm

30 The diagram shows part of a stationary wave between two nodes P and Q.

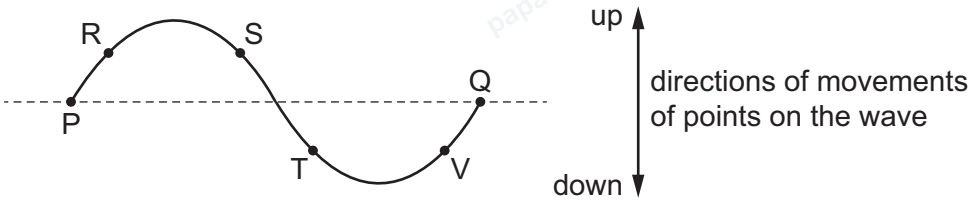

R, S, T and V are points on the wave.

The wave is shown at one instant in time when point V is moving in a downwards direction.

What are the directions of movement of points R, S and T at this instant?

	direction of movement of R	direction of movement of S	direction of movement of T
A	down	down	up
B	down	up	up
C	up	down	down
D	up	up	down

© Cambridge University Press & Assessment 2026

GradeMax

31 The basic principle of note production in a horn is to set up a stationary wave in an air column.

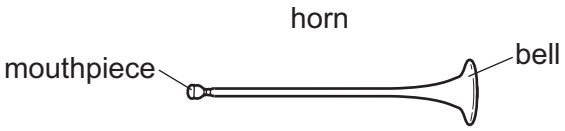

For any note produced by the horn, a node is formed at the mouthpiece, and an antinode is formed at the bell. The frequency of the lowest note is 75 Hz.

What are the frequencies of the next two higher notes for this air column?

	first higher note / Hz	second higher note / Hz
A	113	150
B	150	225
C	150	300
D	225	375

32 Power P is supplied to a component of resistance R in an electrical circuit. When charge Q passes through the component, the energy transferred to the component is E.

Which equation defines the potential difference (p.d.) V across the component?

A $V = EQ$ **B** $V = \frac{E}{Q}$ **C** $V = PR$ **D** $V = \sqrt{PR}$

33 A beam of electrons strikes a screen. The current at the screen is 0.200 μA.

How many electrons strike the screen in a time of 5.00 s?

A 1.25×10^{12} **B** 6.25×10^{12} **C** 1.25×10^{15} **D** 6.25×10^{15}

© Cambridge University Press & Assessment 2026

34 A variable resistor and a light-dependent resistor (LDR) are connected in series.

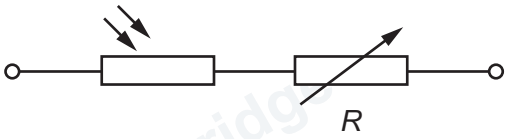

The resistance *R* of the variable resistor is adjusted so that, when light falls on the LDR, the combined resistance of the two resistors remains the same.

Which graph could represent the variation of *R* with the intensity of light that is incident on the LDR?

A

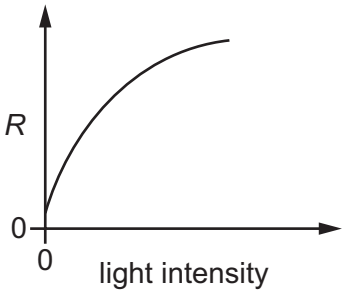

B

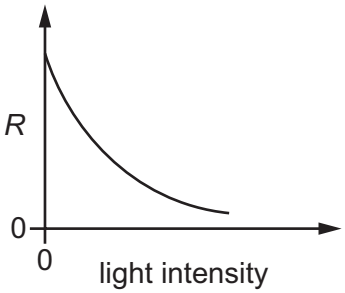

C

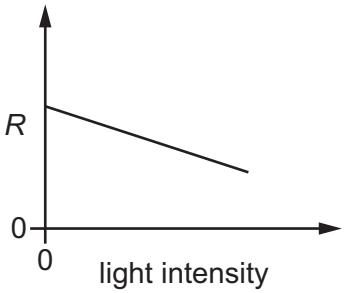

D

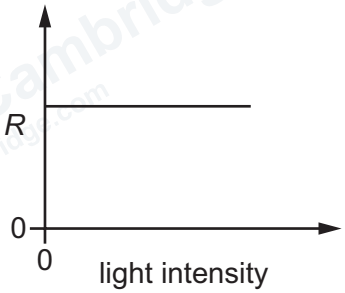

35 Two resistors connected in parallel have a combined resistance of 8.0 Ω.

One of the resistors has a resistance of 24 Ω.

The two resistors are now connected in series.

What is their combined resistance?

A 20 Ω **B** 30 Ω **C** 32 Ω **D** 36 Ω

© Cambridge University Press & Assessment 2026 **[Turn over**

GradeMax

36 Which statement about the terminal potential difference (p.d.) of a power supply in a series circuit is correct?

A The difference between the electromotive force (e.m.f.) and the terminal p.d. of the power supply is equal to the total energy dissipated inside the power supply due to its internal resistance.

B The terminal p.d. of the power supply is equal to the e.m.f. when there is no current in the supply.

C The terminal p.d. of the power supply is the energy transferred in moving a unit charge around the complete circuit.

D The terminal p.d. of the power supply is always more than the e.m.f. due to the internal resistance of the supply.

37 A network consists of a 3.0 Ω resistor and two 6.0 Ω resistors as shown.

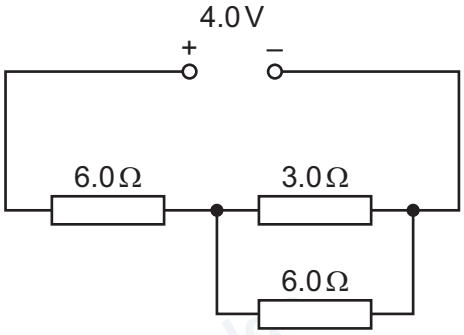

The potential difference (p.d.) across the network is 4.0 V.

What is the current through the 3.0 Ω resistor?

A 0.17 A **B** 0.25 A **C** 0.33 A **D** 1.3 A

38 Which conclusion about the nucleus of an atom is **not** a result of observations from the α-particle scattering experiment?

A The diameter of the nucleus is very small compared to the diameter of the atom.

B The majority of the mass of the atom is concentrated in the nucleus.

C The nucleus of the atom contains protons and neutrons.

D The nucleus of the atom is charged.

39 An unstable nucleus $^{11}_{6}C$ decays in a single step to form a stable nucleus.

During the decay, a nucleon of the unstable nucleus is changed when an up quark in the nucleon becomes a down quark.

What is the stable nucleus that is formed?

A $^{11}_{5}B$ **B** $^{11}_{7}N$ **C** $^{12}_{6}C$ **D** $^{10}_{6}C$

© Cambridge University Press & Assessment 2026

GradeMax

40 The nuclei of the isotopes of an element all contain the same number of a certain particle.

What is this particle?

A electron

B neutron

C nucleon

D proton

PapaCambridge papacambridge.com

BLANK PAGE

© Cambridge University Press & Assessment 2026

BLANK PAGE

© Cambridge University Press & Assessment 2026

BLANK PAGE

Permission to reproduce items where third-party owned material protected by copyright is included has been sought and cleared where possible. Every reasonable effort has been made by the publisher (Cambridge University Press & Assessment) to trace copyright holders, but if any items requiring clearance have unwittingly been included, the publisher will be pleased to make amends at the earliest possible opportunity.

To avoid the issue of disclosure of answer-related information to candidates, all copyright acknowledgements are reproduced online in our Copyright Acknowledgements Booklet. This is produced for each series of examinations and is freely available to download at www.cambridgeinternational.org after the live examination series.

Cambridge International Education is the name of our awarding body and a part of Cambridge University Press & Assessment, which is a department of the University of Cambridge.

© Cambridge University Press & Assessment 2026 9702/14/M/J/26