GradeMax

* 0000800000001 * DFD

CAMBRIDGE
International Education

Cambridge International AS & A Level

CANDIDATE NAME

CENTRE NUMBER

CANDIDATE NUMBER

* 9 1 9 0 4 3 8 8 0 0 *

PHYSICS **9702/22**

Paper 2 AS Level Structured Questions **May/June 2026**

1 hour 15 minutes

You must answer on the question paper.

No additional materials are needed.

INSTRUCTIONS

- Answer **all** questions.
- Use a black or dark blue pen. You may use an HB pencil for any diagrams or graphs.
- Write your name, centre number and candidate number in the boxes at the top of the page.
- Write your answer to each question in the space provided.
- Do **not** use an erasable pen. Do **not** use correction fluid or tape.
- Do **not** write on any bar codes.
- You may use a calculator.
- You should show all your working and use appropriate units.

INFORMATION

- The total mark for this paper is 60.
- The number of marks for each question or part question is shown in brackets [ ].

This document has **20** pages. Any blank pages are indicated.

DC (WW/CB) 356121/4
© Cambridge University Press & Assessment 2026

[Turn over

GradeMax

Data

acceleration of free fall	g	=	$9.81\ \text{m s}^{-2}$
speed of light in free space	c	=	$3.00 \times 10^{8}\ \text{m s}^{-1}$
elementary charge	e	=	$1.60 \times 10^{-19}\ \text{C}$
unified atomic mass unit	1 u	=	$1.66 \times 10^{-27}\ \text{kg}$
rest mass of proton	m_p	=	$1.67 \times 10^{-27}\ \text{kg}$
rest mass of electron	m_e	=	$9.11 \times 10^{-31}\ \text{kg}$
Avogadro constant	N_A	=	$6.02 \times 10^{23}\ \text{mol}^{-1}$
molar gas constant	R	=	$8.31\ \text{J K}^{-1}\ \text{mol}^{-1}$
Boltzmann constant	k	=	$1.38 \times 10^{-23}\ \text{J K}^{-1}$
gravitational constant	G	=	$6.67 \times 10^{-11}\ \text{N m}^2\ \text{kg}^{-2}$
permittivity of free space	ε_0	=	$8.85 \times 10^{-12}\ \text{F m}^{-1}$
	$(\frac{1}{4\pi\varepsilon_0}$	=	$8.99 \times 10^{9}\ \text{m F}^{-1})$
Planck constant	h	=	$6.63 \times 10^{-34}\ \text{J s}$
Stefan–Boltzmann constant	σ	=	$5.67 \times 10^{-8}\ \text{W m}^{-2}\ \text{K}^{-4}$

Formulae

uniformly accelerated motion	s	=	$ut + \frac{1}{2}at^2$
	v^2	=	$u^2 + 2as$
hydrostatic pressure	Δp	=	$\rho g \Delta h$
upthrust	F	=	$\rho g V$
Doppler effect for sound waves	f_o	=	$\frac{f_\text{s} v}{v \pm v_\text{s}}$
electric current	I	=	$Anvq$
resistors in series	R	=	$R_1 + R_2 + \ldots$
resistors in parallel	$\frac{1}{R}$	=	$\frac{1}{R_1} + \frac{1}{R_2} + \ldots$

DO NOT WRITE IN THIS MARGIN
DO NOT WRITE IN THIS MARGIN
DO NOT WRITE IN THIS MARGIN
DO NOT WRITE IN THIS MARGIN
DO NOT WRITE IN THIS MARGIN

© Cambridge University Press & Assessment 2026

GradeMax

BLANK PAGE

DO NOT WRITE IN THIS MARGIN
DO NOT WRITE IN THIS MARGIN
DO NOT WRITE IN THIS MARGIN
DO NOT WRITE IN THIS MARGIN
DO NOT WRITE IN THIS MARGIN

GradeMax

1 **(a)** By placing **one** tick (✓) in each row, complete Table 1.1 to identify whether each of the listed quantities is a scalar or a vector.

Table 1.1

quantity	scalar	vector
amplitude		
force		
momentum		
power		

[2]

(b) A car moves in a straight line along a road. Figure 1.1 shows the variation with time t of the velocity v of the car.

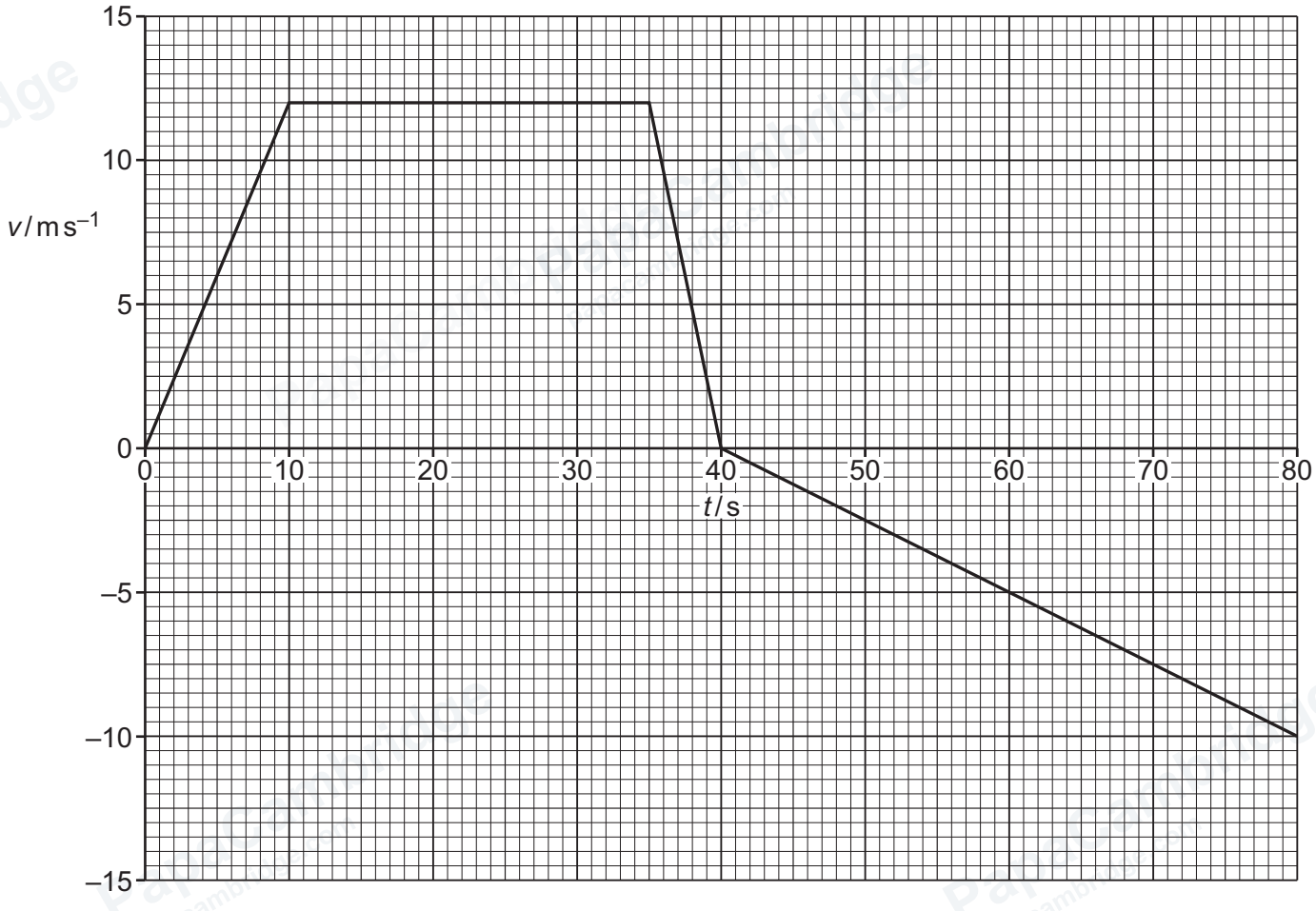

Figure 1.1

© Cambridge University Press & Assessment 2026

DO NOT WRITE IN THIS MARGIN
DO NOT WRITE IN THIS MARGIN
DO NOT WRITE IN THIS MARGIN
DO NOT WRITE IN THIS MARGIN
DO NOT WRITE IN THIS MARGIN

GradeMax

(i) State the feature of the graph that represents the distance travelled by the car between $t = 0$ and $t = 40$ s.

..... [1]

(ii) Calculate the distance travelled by the car between $t = 0$ and $t = 40$ s.

distance = ... m [1]

(iii) Determine the maximum magnitude of the acceleration of the car.

acceleration = ... $m\,s^{-2}$ [2]

(iv) At $t = 25$ s, the car is at a point P.
At $t = 40$ s, the car is at a distance of 150 m from P.
After $t = 40$ s, the car travels with a constant acceleration of $-0.25\,m\,s^{-2}$ until the car is again at point P.

Calculate the speed of the car when it is at point P for the second time.

speed = ... $m\,s^{-1}$ [2]

DO NOT WRITE IN THIS MARGIN
DO NOT WRITE IN THIS MARGIN
DO NOT WRITE IN THIS MARGIN
DO NOT WRITE IN THIS MARGIN
DO NOT WRITE IN THIS MARGIN

© Cambridge University Press & Assessment 2026

(v) At $t = 0$, the displacement of the car is zero.

On Figure 1.2, sketch the variation of the displacement of the car with t from $t = 0$ to $t = 80$ s. Values for displacement are **not** required.

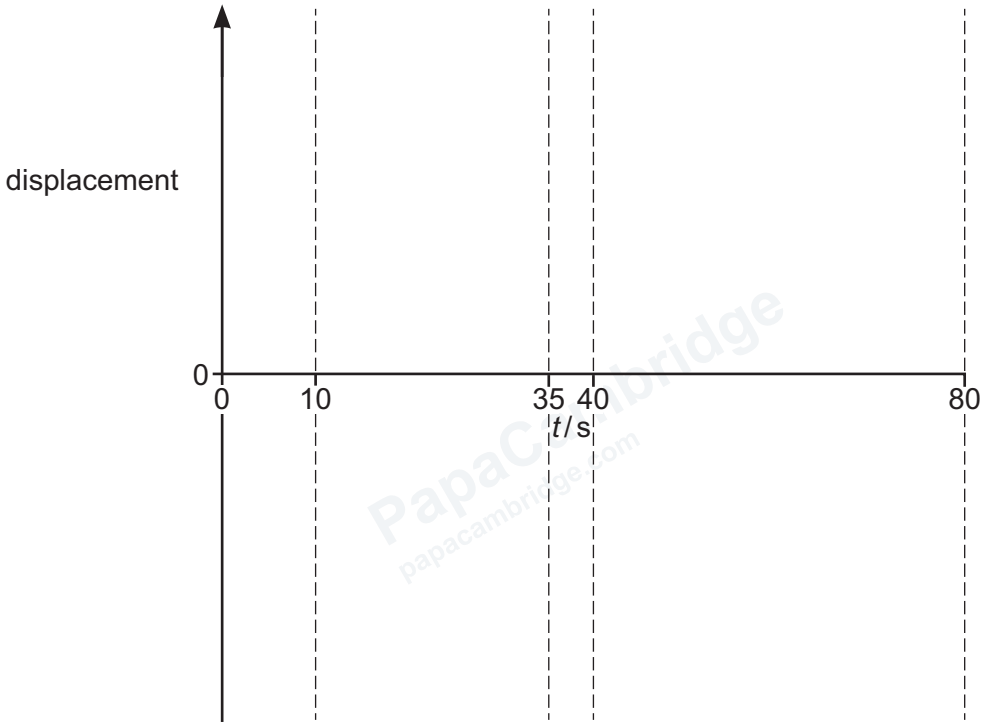

Figure 1.2

[3]

[Total: 11]

DO NOT WRITE IN THIS MARGIN
DO NOT WRITE IN THIS MARGIN
DO NOT WRITE IN THIS MARGIN
DO NOT WRITE IN THIS MARGIN
DO NOT WRITE IN THIS MARGIN

© Cambridge University Press & Assessment 2026

GradeMax

DO NOT WRITE IN THIS MARGIN
DO NOT WRITE IN THIS MARGIN
DO NOT WRITE IN THIS MARGIN
DO NOT WRITE IN THIS MARGIN
DO NOT WRITE IN THIS MARGIN

Turn over

© Cambridge University Press & Assessment 2026

2 **(a)** State the conditions required for an object to be in equilibrium.

.....

.....

..... [2]

(b) A block rests in equilibrium on the centre of a uniform horizontal plank. The block is attached to two ropes, each of which passes over a fixed pulley and then attaches to an end of the plank as shown in Figure 2.1.

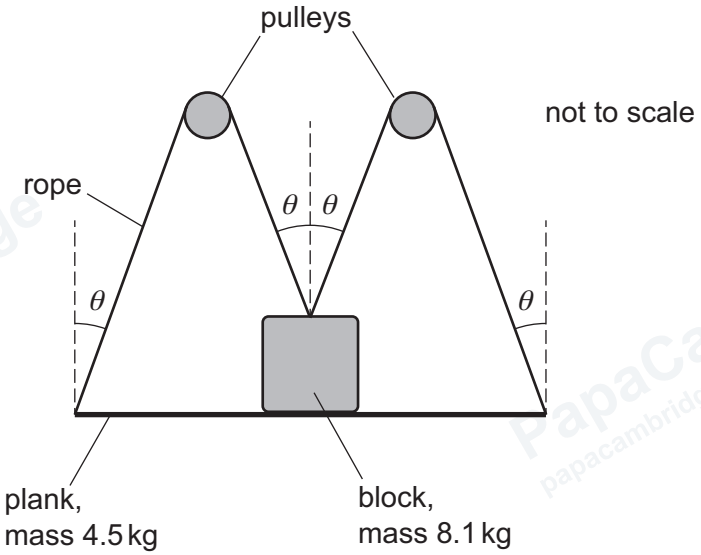

Figure 2.1

Where the ropes attach to the block and to the plank, the angle between the ropes and the vertical is θ. There is negligible friction between the pulleys and the ropes.

The mass of the block is 8.1 kg. The mass of the plank is 4.5 kg.

Figure 2.2 shows the directions of the forces acting on the plank and the block.
The weight of the plank is W_P, the weight of the block is W_B, the tension in each rope is T and the forces that the plank and the block exert on each other each have magnitude R.

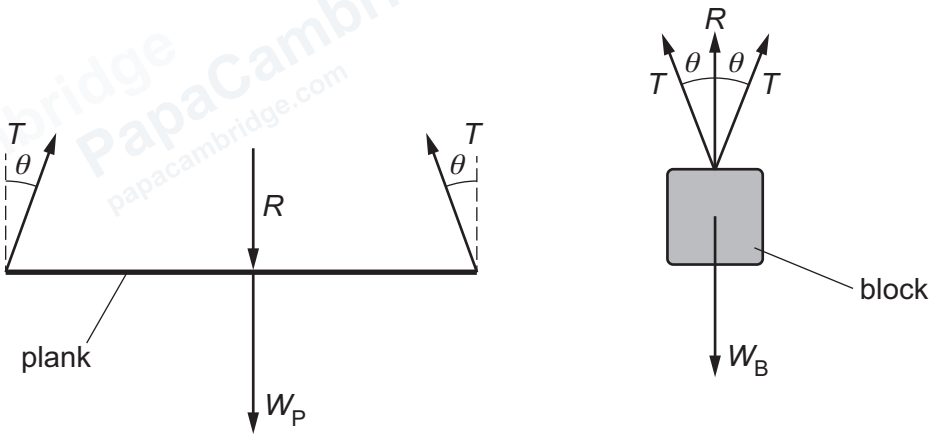

Figure 2.2

© Cambridge University Press & Assessment 2026

DO NOT WRITE IN THIS MARGIN
DO NOT WRITE IN THIS MARGIN
DO NOT WRITE IN THIS MARGIN
DO NOT WRITE IN THIS MARGIN
DO NOT WRITE IN THIS MARGIN

GradeMax

(i) Use Figure 2.2 to show that

$$R + W_P = W_B - R.$$

[2]

(ii) Use the equation in **2(b)(i)** to calculate the magnitude of R.

R = ... N [2]

(c) The extension of each rope in **2(b)** is proportional to the force applied to it.

(i) State the name of the law that describes this behaviour.

..... [1]

(ii) The ropes have elastic deformation.

State what is meant by elastic deformation.

.....

..... [1]

[Total: 8]

DO NOT WRITE IN THIS MARGIN
DO NOT WRITE IN THIS MARGIN
DO NOT WRITE IN THIS MARGIN
DO NOT WRITE IN THIS MARGIN
DO NOT WRITE IN THIS MARGIN

GradeMax

3 Two oscillating dippers are used to create progressive transverse water waves on the surface of a lake. The waves are shown from above in Figure 3.1.

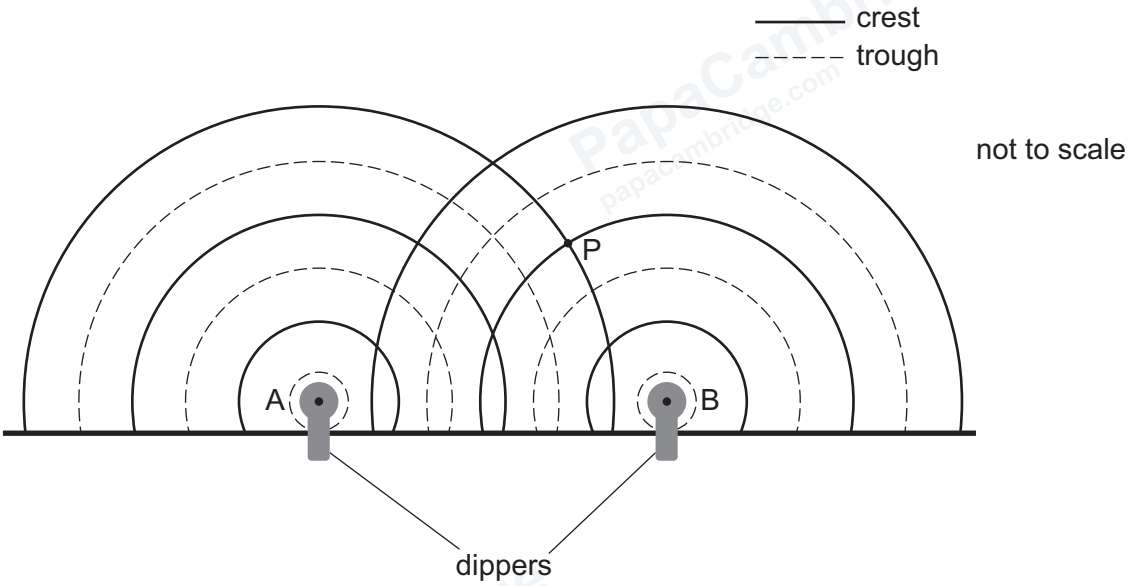

Figure 3.1

Wave crests are represented by a solid line. Wave troughs are represented by a dashed line. The waves superpose and an interference pattern is formed on the surface of the water.

The dippers oscillate in phase with each other and with a frequency of 3.0 Hz.

(a) State what is meant by a progressive wave.

.....

..... [1]

(b) **(i)** Calculate the period of the waves.

period = ... s [1]

DO NOT WRITE IN THIS MARGIN
DO NOT WRITE IN THIS MARGIN
DO NOT WRITE IN THIS MARGIN
DO NOT WRITE IN THIS MARGIN
DO NOT WRITE IN THIS MARGIN

© Cambridge University Press & Assessment 2026

GradeMax

(ii) Points A and B are at the centre of the dippers. Point P is shown on Figure 3.1. The distance from A to P is 3.9 m. The distance from B to P is 2.4 m.

Determine the speed of the waves.

speed = ... $m\,s^{-1}$ [3]

(c) A ball of mass 0.44 kg is placed at P, where it floats on the surface of the lake. The amplitude of the vertical oscillation of the ball is 15 cm.

(i) Calculate the difference in the gravitational potential energy ΔE of the ball between its highest and lowest points.

ΔE = ... J [3]

(ii) The frequency of oscillation of the dippers is increased to 4.0 Hz without changing their amplitude of oscillation. The ball remains at the same position on the surface of the lake.

State and explain whether the amplitude of the oscillation of the ball increases, decreases or remains the same.

.....

.....

.....

..... [2]

[Total: 10]

DO NOT WRITE IN THIS MARGIN
DO NOT WRITE IN THIS MARGIN
DO NOT WRITE IN THIS MARGIN
DO NOT WRITE IN THIS MARGIN
DO NOT WRITE IN THIS MARGIN

© Cambridge University Press & Assessment 2026

GradeMax

4 An electric train of mass 1.5×10^4 kg travels up a slope at a constant speed as shown in Figure 4.1.

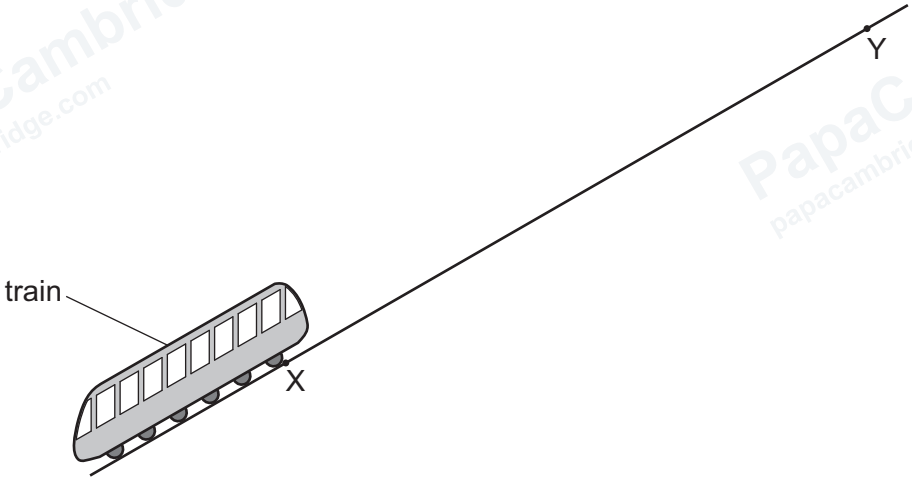

Figure 4.1

At point X, the train has gravitational potential energy 7.4 MJ.
At point Y, the train has gravitational potential energy 13.0 MJ.
The train takes a time of 52 s to move from X to Y.
The kinetic energy of the train is 1.3×10^5 J.

(a) Calculate the speed of the train.

speed = ... $m\,s^{-1}$ [3]

(b) The train is powered by an electric motor. The useful output power of the motor is 1.1×10^5 W.

(i) Define power.

..... [1]

DO NOT WRITE IN THIS MARGIN
DO NOT WRITE IN THIS MARGIN
DO NOT WRITE IN THIS MARGIN
DO NOT WRITE IN THIS MARGIN
DO NOT WRITE IN THIS MARGIN

© Cambridge University Press & Assessment 2026

GradeMax

(ii) Determine the resistive force *F* acting on the train as it moves from point X to point Y.

F = ... N [3]

(iii) The current in the motor is 95A. The potential difference (p.d.) across the motor is 1400V.

Calculate the percentage efficiency of the motor.

percentage efficiency = ...% [3]

[Total: 10]

DO NOT WRITE IN THIS MARGIN
DO NOT WRITE IN THIS MARGIN
DO NOT WRITE IN THIS MARGIN
DO NOT WRITE IN THIS MARGIN
DO NOT WRITE IN THIS MARGIN

GradeMax

5 **(a)** Three resistors of resistances R_1, R_2 and R_3 are connected in a network in parallel as shown in Figure 5.1.

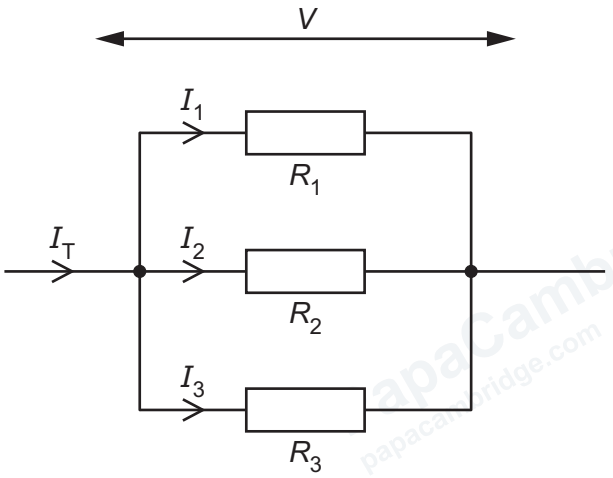

Figure 5.1

The currents in the resistors are I_1, I_2 and I_3 respectively. The total current entering the network is I_T. The potential difference (p.d.) across the resistors is V.

Derive the equation

$$\frac{1}{R_T} = \frac{1}{R_1} + \frac{1}{R_2} + \frac{1}{R_3}$$

where R_T is the total resistance of the network.

[2]

DO NOT WRITE IN THIS MARGIN
DO NOT WRITE IN THIS MARGIN
DO NOT WRITE IN THIS MARGIN
DO NOT WRITE IN THIS MARGIN
DO NOT WRITE IN THIS MARGIN

© Cambridge University Press & Assessment 2026

GradeMax

(b) Two identical resistance wires, each of resistance 2.8 Ω, are connected in parallel to a battery with negligible internal resistance and electromotive force (e.m.f.) 12 V as shown in Figure 5.2.

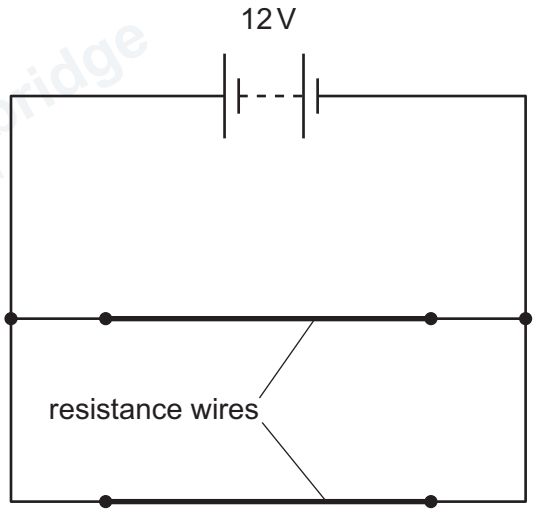

Figure 5.2

(i) Calculate the current in the battery.

current = ...A [2]

(ii) Each resistance wire has a cross-sectional area of $6.1 \times 10^{-6}\,m^2$.

The wires are made from a metal with a number density of charge carriers (free electrons) of $8.5 \times 10^{28}\,m^{-3}$.

Calculate the average drift speed of the charge carriers in the wires.

speed = ... $m\,s^{-1}$ [2]

© Cambridge University Press & Assessment 2026

DO NOT WRITE IN THIS MARGIN
DO NOT WRITE IN THIS MARGIN
DO NOT WRITE IN THIS MARGIN
DO NOT WRITE IN THIS MARGIN
DO NOT WRITE IN THIS MARGIN

(c) A component X is added to the circuit in **5(b)** as shown in Figure 5.3.

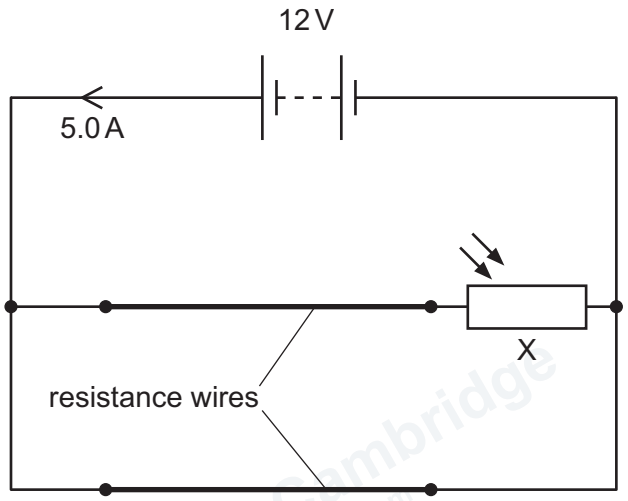

Figure 5.3

The current in the battery is now 5.0 A.
The resistance of each resistance wire remains 2.8 Ω.

(i) State the name of component X.

..... [1]

(ii) Determine the resistance of component X.

resistance = ... Ω [3]

© Cambridge University Press & Assessment 2026

GradeMax

DO NOT WRITE IN THIS MARGIN

DO NOT WRITE IN THIS MARGIN

DO NOT WRITE IN THIS MARGIN

DO NOT WRITE IN THIS MARGIN

DO NOT WRITE IN THIS MARGIN

GradeMax

(iii) A change in the environment of component X causes the current in the battery to decrease. The resistance of the resistance wires remains constant.

State and explain how the environment of X has changed.

.....

.....

.....

..... [2]

[Total: 12]

DO NOT WRITE IN THIS MARGIN
DO NOT WRITE IN THIS MARGIN
DO NOT WRITE IN THIS MARGIN
DO NOT WRITE IN THIS MARGIN
DO NOT WRITE IN THIS MARGIN

PapaCambridge papacambridge.com

GradeMax

6 **(a)** One of the conclusions from the α-particle scattering experiment was that the atom is mostly empty space.

State the observation from the experiment that provides evidence for this conclusion.

.....

..... [1]

(b) An α-particle travelling with a speed of $5.60 \times 10^6\,\text{m s}^{-1}$ collides with a stationary gold nucleus of mass 197 u. After the collision, the α-particle is travelling with a speed of $5.38 \times 10^6\,\text{m s}^{-1}$ in the opposite direction to its initial motion.
No external forces act on this system.

(i) Show that the momentum of the α-particle before the collision is $3.72 \times 10^{-20}\,\text{kg m s}^{-1}$.

[2]

(ii) Use conservation of momentum to calculate the speed of the gold nucleus after the collision.

speed = ... m s^{-1} [2]

DO NOT WRITE IN THIS MARGIN
DO NOT WRITE IN THIS MARGIN
DO NOT WRITE IN THIS MARGIN
DO NOT WRITE IN THIS MARGIN
DO NOT WRITE IN THIS MARGIN

© Cambridge University Press & Assessment 2026

GradeMax

(iii) The absolute uncertainty in each of the measured speeds of the α-particle is $\pm 5 \times 10^4\,\text{m s}^{-1}$.

Calculate the percentage uncertainty in the change in velocity of the α-particle.

percentage uncertainty = ...% [2]

(c) Determine the number of up quarks in a nucleus of ${}^{2}_{1}\text{H}$.

number = ... [1]

(d) Describe the general quark composition of a meson.

.....

..... [1]

[Total: 9]

DO NOT WRITE IN THIS MARGIN
DO NOT WRITE IN THIS MARGIN
DO NOT WRITE IN THIS MARGIN
DO NOT WRITE IN THIS MARGIN
DO NOT WRITE IN THIS MARGIN

© Cambridge University Press & Assessment 2026

GradeMax

BLANK PAGE

DO NOT WRITE IN THIS MARGIN
DO NOT WRITE IN THIS MARGIN
DO NOT WRITE IN THIS MARGIN
DO NOT WRITE IN THIS MARGIN
DO NOT WRITE IN THIS MARGIN

Permission to reproduce items where third-party owned material protected by copyright is included has been sought and cleared where possible. Every reasonable effort has been made by the publisher (Cambridge University Press & Assessment) to trace copyright holders, but if any items requiring clearance have unwittingly been included, the publisher will be pleased to make amends at the earliest possible opportunity.

To avoid the issue of disclosure of answer-related information to candidates, all copyright acknowledgements are reproduced online in our Copyright Acknowledgements Booklet. This is produced for each series of examinations and is freely available to download at www.cambridgeinternational.org after the live examination series.

Cambridge International Education is the name of our awarding body and a part of Cambridge University Press & Assessment, which is a department of the University of Cambridge.

© Cambridge University Press & Assessment 2026