GradeMax

* 0000800000001 * DFD

CAMBRIDGE
International Education

Cambridge International AS & A Level

CANDIDATE NAME

CENTRE NUMBER

CANDIDATE NUMBER

* 6 4 6 6 6 2 6 8 6 4 *

PHYSICS **9702/23**

Paper 2 AS Level Structured Questions **May/June 2026**

1 hour 15 minutes

You must answer on the question paper.

No additional materials are needed.

INSTRUCTIONS

- Answer **all** questions.
- Use a black or dark blue pen. You may use an HB pencil for any diagrams or graphs.
- Write your name, centre number and candidate number in the boxes at the top of the page.
- Write your answer to each question in the space provided.
- Do **not** use an erasable pen. Do **not** use correction fluid or tape.
- Do **not** write on any bar codes.
- You may use a calculator.
- You should show all your working and use appropriate units.

INFORMATION

- The total mark for this paper is 60.
- The number of marks for each question or part question is shown in brackets [ ].

This document has **16** pages. Any blank pages are indicated.

DC (WW/CT) 356122/3
© Cambridge University Press & Assessment 2026

[Turn over

GradeMax

Data

acceleration of free fall	g	=	$9.81\ \text{m s}^{-2}$
speed of light in free space	c	=	$3.00 \times 10^{8}\ \text{m s}^{-1}$
elementary charge	e	=	$1.60 \times 10^{-19}\ \text{C}$
unified atomic mass unit	1 u	=	$1.66 \times 10^{-27}\ \text{kg}$
rest mass of proton	m_p	=	$1.67 \times 10^{-27}\ \text{kg}$
rest mass of electron	m_e	=	$9.11 \times 10^{-31}\ \text{kg}$
Avogadro constant	N_A	=	$6.02 \times 10^{23}\ \text{mol}^{-1}$
molar gas constant	R	=	$8.31\ \text{J K}^{-1}\ \text{mol}^{-1}$
Boltzmann constant	k	=	$1.38 \times 10^{-23}\ \text{J K}^{-1}$
gravitational constant	G	=	$6.67 \times 10^{-11}\ \text{N m}^2\ \text{kg}^{-2}$
permittivity of free space	ε_0	=	$8.85 \times 10^{-12}\ \text{F m}^{-1}$
	$\left(\frac{1}{4\pi\varepsilon_0}\right.$	=	$\left.8.99 \times 10^{9}\ \text{m F}^{-1}\right)$
Planck constant	h	=	$6.63 \times 10^{-34}\ \text{J s}$
Stefan–Boltzmann constant	σ	=	$5.67 \times 10^{-8}\ \text{W m}^{-2}\ \text{K}^{-4}$

Formulae

uniformly accelerated motion	s	=	$ut + \frac{1}{2}at^2$
	v^2	=	$u^2 + 2as$
hydrostatic pressure	Δp	=	$\rho g \Delta h$
upthrust	F	=	$\rho g V$
Doppler effect for sound waves	f_o	=	$\frac{f_\text{s} v}{v \pm v_\text{s}}$
electric current	I	=	$Anvq$
resistors in series	R	=	$R_1 + R_2 + \ldots$
resistors in parallel	$\frac{1}{R}$	=	$\frac{1}{R_1} + \frac{1}{R_2} + \ldots$

© Cambridge University Press & Assessment 2026

DO NOT WRITE IN THIS MARGIN DO NOT WRITE IN THIS MARGIN DO NOT WRITE IN THIS MARGIN DO NOT WRITE IN THIS MARGIN DO NOT WRITE IN THIS MARGIN

GradeMax

BLANK PAGE

DO NOT WRITE IN THIS MARGIN
DO NOT WRITE IN THIS MARGIN
DO NOT WRITE IN THIS MARGIN
DO NOT WRITE IN THIS MARGIN
DO NOT WRITE IN THIS MARGIN

GradeMax

1 **(a)** Define momentum.

.....

..... [1]

(b) A ball X of mass 0.15 kg moves along a horizontal frictionless surface. The ball collides elastically with ball Y that is initially stationary. Balls X and Y have equal diameters but different masses.

Figure 1.1 shows the variation with time of the velocity of ball X before, during and after the collision.

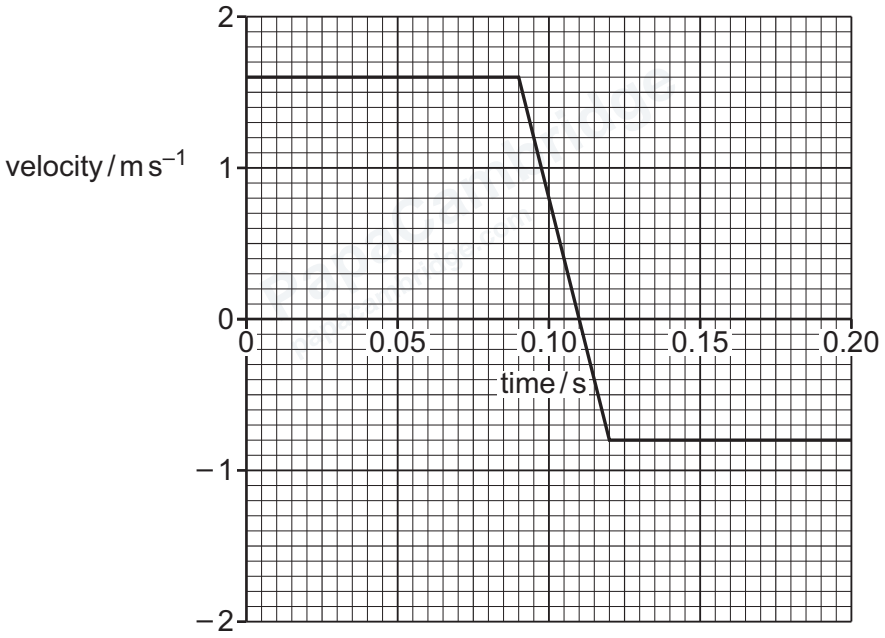

Figure 1.1

(i) Determine the magnitude of the acceleration of ball X during the collision.

acceleration = ... $m\,s^{-2}$ [2]

© Cambridge University Press & Assessment 2026

DO NOT WRITE IN THIS MARGIN
DO NOT WRITE IN THIS MARGIN
DO NOT WRITE IN THIS MARGIN
DO NOT WRITE IN THIS MARGIN
DO NOT WRITE IN THIS MARGIN

GradeMax

(ii) Determine the magnitude of the change in momentum of ball X due to the collision.

change in momentum = ... kg m s^{-1} [2]

(iii) Determine the total distance travelled by ball X during the collision.

distance = ... m [2]

(c) (i) By considering relative speeds, explain why the velocity of ball Y after the collision must be +0.80 m s^{-1}.

.....

.....

..... [2]

(ii) On Figure 1.1, sketch the variation of the velocity of ball Y with time between time = 0 and time = 0.20 s. [2]

(iii) Calculate the mass of ball Y.

mass = ... kg [2]

[Total: 13]

© Cambridge University Press & Assessment 2026

DO NOT WRITE IN THIS MARGIN
DO NOT WRITE IN THIS MARGIN
DO NOT WRITE IN THIS MARGIN
DO NOT WRITE IN THIS MARGIN
DO NOT WRITE IN THIS MARGIN

2 **(a)** Define the Young modulus of a material.

.....

..... [1]

(b) A long, thin thread of high-density polythene has a uniform cross-section. The thread is suspended from one end so that it hangs vertically.

The thread has a mass of 0.018 kg and a cross-sectional area of $2.6 \times 10^{-6}\,m^2$.
High-density polythene has a density of $960\,kg\,m^{-3}$ and a Young modulus of $8.0 \times 10^{8}\,Pa$.

(i) Show that the length of the thread is 7.2 m.

[2]

(ii) Show that the stress at the top of the thread due to its own weight is $6.8 \times 10^{4}\,Pa$.

[2]

(iii) Figure 2.1 shows the variation with distance from the top of the thread of the stress in the thread due to its own weight.

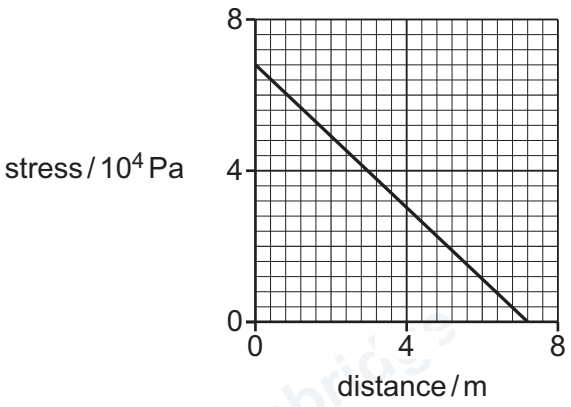

Figure 2.1

DO NOT WRITE IN THIS MARGIN
DO NOT WRITE IN THIS MARGIN
DO NOT WRITE IN THIS MARGIN
DO NOT WRITE IN THIS MARGIN
DO NOT WRITE IN THIS MARGIN

GradeMax

Suggest an explanation for the fact that the variation shown in Figure 2.1 is linear.

.....

.....

.....

..... [2]

(c) The thread in **2(b)** is now laid horizontally on a frictionless bench. A tensile force is applied to the ends of the thread so that there is a uniform stress throughout the thread of 6.8×10^4 Pa.

(i) Calculate the extension of the thread.

extension = ... m [2]

(ii) Calculate the elastic potential energy of the thread.

elastic potential energy = ... J [2]

(d) Suggest, with a reason, whether the total extension of the vertically suspended thread in **2(b)** is less than, equal to or greater than the answer in **2(c)(i)**.

.....

.....

..... [1]

[Total: 12]

DO NOT WRITE IN THIS MARGIN
DO NOT WRITE IN THIS MARGIN
DO NOT WRITE IN THIS MARGIN
DO NOT WRITE IN THIS MARGIN
DO NOT WRITE IN THIS MARGIN

© Cambridge University Press & Assessment 2026

GradeMax

3 **(a)** State the principle of superposition.

.....

.....

..... [2]

(b) Parallel rays of coherent light of wavelength 560 nm are incident normally in free space on two narrow slits as shown in Figure 3.1.

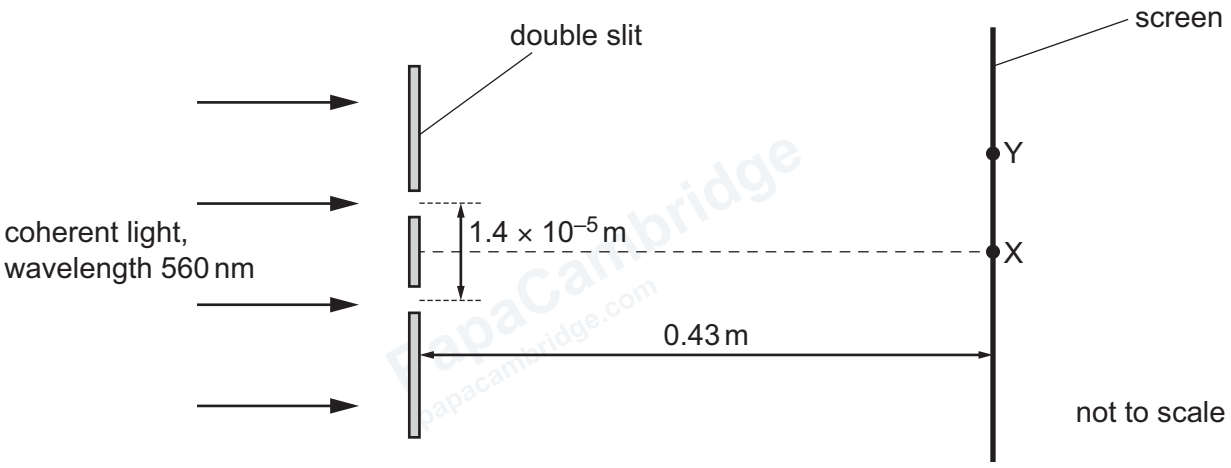

Figure 3.1

Light passing through the double slit reaches a screen that is parallel to the plane of the slits.
The distance between the centres of the slits is 1.4×10^{-5} m.
The distance between the slits and the screen is 0.43 m.

(i) State what is meant by coherent.

.....

..... [1]

(ii) State what happens to the light at the point where it passes through the slits.

.....

..... [1]

DO NOT WRITE IN THIS MARGIN
DO NOT WRITE IN THIS MARGIN
DO NOT WRITE IN THIS MARGIN
DO NOT WRITE IN THIS MARGIN
DO NOT WRITE IN THIS MARGIN

© Cambridge University Press & Assessment 2026

GradeMax

(iii) At point X on the screen, there is a central bright fringe.

Explain how this bright fringe is formed.

.....

.....

.....

.....

..... [3]

(iv) At point Y on the screen, the dark fringe closest to point X is formed.

Calculate the distance XY.

distance = ... m [3]

(c) On the screen in Figure 3.1:

(i) draw a cross (×) labelled with the letter B at the position of another bright fringe [1]

(ii) draw a cross (×) labelled with the letter D at the position of another dark fringe. [1]

(d) Calculate the frequency of the light in **3(b)**.

frequency = ... Hz [2]

[Total: 14]

DO NOT WRITE IN THIS MARGIN
DO NOT WRITE IN THIS MARGIN
DO NOT WRITE IN THIS MARGIN
DO NOT WRITE IN THIS MARGIN
DO NOT WRITE IN THIS MARGIN

© Cambridge University Press & Assessment 2026

GradeMax

4 A light-dependent resistor (LDR) is connected across the terminals of a cell that has internal resistance. A voltmeter is connected across the LDR.

(a) Draw a circuit diagram to show this arrangement.

[3]

(b) The cell has an electromotive force (e.m.f.) of 4.90 V.

At a particular light intensity, the LDR has a resistance of 230 Ω and a potential difference (p.d.) across it of 4.78 V.

(i) Identify **one** possible source of systematic error in measuring the p.d. across the LDR using a digital voltmeter.

.....

..... [1]

(ii) Calculate the power dissipated in the LDR.

power = ... W [2]

(iii) Determine the internal resistance of the cell.

internal resistance = ... Ω [2]

© Cambridge University Press & Assessment 2026

DO NOT WRITE IN THIS MARGIN
DO NOT WRITE IN THIS MARGIN
DO NOT WRITE IN THIS MARGIN
DO NOT WRITE IN THIS MARGIN
DO NOT WRITE IN THIS MARGIN

(iv) The intensity of the light illuminating the LDR is gradually decreased.

By placing **one** tick (✓) in each row, complete Table 4.1 to show what happens to the quantities indicated as the light intensity decreases.

Table 4.1

	decreases	**unchanged**	**increases**
resistance of LDR			
current in cell			
p.d. across LDR			

[3]

[Total: 11]

DO NOT WRITE IN THIS MARGIN
DO NOT WRITE IN THIS MARGIN
DO NOT WRITE IN THIS MARGIN
DO NOT WRITE IN THIS MARGIN
DO NOT WRITE IN THIS MARGIN

GradeMax

5 **(a)** State what is meant by a meson.

.....

..... [1]

(b) The elementary charge is *e*.

Explain, in terms of quark composition, how a baryon may have an overall charge of:

- –1*e* .....

  .....

- +2*e* .....

  .....

[3]

(c) The nuclide $^{18}_{8}X$ undergoes β^+ decay to produce nuclide $^{P}_{Q}Y$ and one other particle Z, as shown in the equation

$$^{18}_{8}X \rightarrow {}^{P}_{Q}Y + {}^{R}_{S}\beta^+ + {}^{0}_{0}Z.$$

(i) State the values of *P*, *Q*, *R* and *S*.

P = ...

Q = ...

R = ...

S = ...

[2]

(ii) State the name of particle Z.

..... [1]

(iii) State the net change in quark composition as nuclide X turns into nuclide Y.

..... [1]

DO NOT WRITE IN THIS MARGIN
DO NOT WRITE IN THIS MARGIN
DO NOT WRITE IN THIS MARGIN
DO NOT WRITE IN THIS MARGIN
DO NOT WRITE IN THIS MARGIN

© Cambridge University Press & Assessment 2026

GradeMax

(iv) Explain why the emission of particle Z results in the β^+ particles from the decays of different nuclei of $^{18}_{8}X$ having a continuous range of kinetic energies.

.....

.....

.....

..... [2]

[Total: 10]

DO NOT WRITE IN THIS MARGIN
DO NOT WRITE IN THIS MARGIN
DO NOT WRITE IN THIS MARGIN
DO NOT WRITE IN THIS MARGIN
DO NOT WRITE IN THIS MARGIN

PapaCambridge papacambridge.com

© Cambridge University Press & Assessment 2026

GradeMax

BLANK PAGE

DO NOT WRITE IN THIS MARGIN
DO NOT WRITE IN THIS MARGIN
DO NOT WRITE IN THIS MARGIN
DO NOT WRITE IN THIS MARGIN
DO NOT WRITE IN THIS MARGIN

© Cambridge University Press & Assessment 2026

GradeMax

BLANK PAGE

DO NOT WRITE IN THIS MARGIN
DO NOT WRITE IN THIS MARGIN
DO NOT WRITE IN THIS MARGIN
DO NOT WRITE IN THIS MARGIN
DO NOT WRITE IN THIS MARGIN

© Cambridge University Press & Assessment 2026

GradeMax

BLANK PAGE

DO NOT WRITE IN THIS MARGIN
DO NOT WRITE IN THIS MARGIN
DO NOT WRITE IN THIS MARGIN
DO NOT WRITE IN THIS MARGIN
DO NOT WRITE IN THIS MARGIN

Permission to reproduce items where third-party owned material protected by copyright is included has been sought and cleared where possible. Every reasonable effort has been made by the publisher (Cambridge University Press & Assessment) to trace copyright holders, but if any items requiring clearance have unwittingly been included, the publisher will be pleased to make amends at the earliest possible opportunity.

To avoid the issue of disclosure of answer-related information to candidates, all copyright acknowledgements are reproduced online in our Copyright Acknowledgements Booklet. This is produced for each series of examinations and is freely available to download at www.cambridgeinternational.org after the live examination series.

Cambridge International Education is the name of our awarding body and a part of Cambridge University Press & Assessment, which is a department of the University of Cambridge.

© Cambridge University Press & Assessment 2026