GradeMax

* 0000800000001 * DFD

CAMBRIDGE
International Education

Cambridge International AS & A Level

CANDIDATE NAME

CENTRE NUMBER

CANDIDATE NUMBER

* 6 2 1 8 1 4 1 2 7 5 *

PHYSICS **9702/24**

Paper 2 AS Level Structured Questions **May/June 2026**

1 hour 15 minutes

You must answer on the question paper.

No additional materials are needed.

INSTRUCTIONS

- Answer **all** questions.
- Use a black or dark blue pen. You may use an HB pencil for any diagrams or graphs.
- Write your name, centre number and candidate number in the boxes at the top of the page.
- Write your answer to each question in the space provided.
- Do **not** use an erasable pen. Do **not** use correction fluid or tape.
- Do **not** write on any bar codes.
- You may use a calculator.
- You should show all your working and use appropriate units.

INFORMATION

- The total mark for this paper is 60.
- The number of marks for each question or part question is shown in brackets [ ].

This document has **16** pages.

DC (WW/SG) 362029/3
© Cambridge University Press & Assessment 2026

[Turn over

Data

acceleration of free fall	g	=	$9.81\ \text{m s}^{-2}$
speed of light in free space	c	=	$3.00 \times 10^{8}\ \text{m s}^{-1}$
elementary charge	e	=	$1.60 \times 10^{-19}\ \text{C}$
unified atomic mass unit	1 u	=	$1.66 \times 10^{-27}\ \text{kg}$
rest mass of proton	m_p	=	$1.67 \times 10^{-27}\ \text{kg}$
rest mass of electron	m_e	=	$9.11 \times 10^{-31}\ \text{kg}$
Avogadro constant	N_A	=	$6.02 \times 10^{23}\ \text{mol}^{-1}$
molar gas constant	R	=	$8.31\ \text{J K}^{-1}\ \text{mol}^{-1}$
Boltzmann constant	k	=	$1.38 \times 10^{-23}\ \text{J K}^{-1}$
gravitational constant	G	=	$6.67 \times 10^{-11}\ \text{N m}^2\ \text{kg}^{-2}$
permittivity of free space	ε_0	=	$8.85 \times 10^{-12}\ \text{F m}^{-1}$
	$\left(\frac{1}{4\pi\varepsilon_0}\right.$	=	$\left.8.99 \times 10^{9}\ \text{m F}^{-1}\right)$
Planck constant	h	=	$6.63 \times 10^{-34}\ \text{J s}$
Stefan–Boltzmann constant	σ	=	$5.67 \times 10^{-8}\ \text{W m}^{-2}\ \text{K}^{-4}$

Formulae

uniformly accelerated motion	s	=	$ut + \frac{1}{2}at^2$
	v^2	=	$u^2 + 2as$
hydrostatic pressure	Δp	=	$\rho g \Delta h$
upthrust	F	=	$\rho g V$
Doppler effect for sound waves	f_o	=	$\frac{f_\text{s} v}{v \pm v_\text{s}}$
electric current	I	=	$Anvq$
resistors in series	R	=	$R_1 + R_2 + \ldots$
resistors in parallel	$\frac{1}{R}$	=	$\frac{1}{R_1} + \frac{1}{R_2} + \ldots$

© Cambridge University Press & Assessment 2026

GradeMax

DO NOT WRITE IN THIS MARGIN

DO NOT WRITE IN THIS MARGIN

DO NOT WRITE IN THIS MARGIN

DO NOT WRITE IN THIS MARGIN

DO NOT WRITE IN THIS MARGIN

GradeMax

DO NOT WRITE IN THIS MARGIN
DO NOT WRITE IN THIS MARGIN
DO NOT WRITE IN THIS MARGIN
DO NOT WRITE IN THIS MARGIN
DO NOT WRITE IN THIS MARGIN

PapaCambridge
papacambridge.com

Turn over

GradeMax

1 **(a)** Underline **all** the vector quantities in the following list:

distance displacement speed velocity acceleration.

[1]

(b) A car of mass 1400 kg is initially travelling horizontally in a straight line at a constant speed of 15 m s^{-1}. The brakes are applied and the car decelerates uniformly to rest in a distance of 35 m.

Calculate:

(i) the initial kinetic energy of the car

kinetic energy = ... J [2]

(ii) the acceleration of the car

acceleration = ... m s^{-2} [2]

(iii) the resultant force on the decelerating car.

force = ... N [2]

© Cambridge University Press & Assessment 2026

DO NOT WRITE IN THIS MARGIN DO NOT WRITE IN THIS MARGIN DO NOT WRITE IN THIS MARGIN DO NOT WRITE IN THIS MARGIN DO NOT WRITE IN THIS MARGIN

GradeMax

(c) The initial speed of the car in **1(b)** is now doubled to $30\,m\,s^{-1}$. The brakes of the car are then applied and the car comes to rest. The resultant force on the car remains the same as in **1(b)(iii)**.

Describe and explain the effect, if any, of doubling the initial speed on:

(i) the magnitude of the acceleration of the car

.....

.....

..... [1]

(ii) the distance travelled by the car in coming to rest.

.....

.....

.....

..... [2]

[Total: 10]

DO NOT WRITE IN THIS MARGIN
DO NOT WRITE IN THIS MARGIN
DO NOT WRITE IN THIS MARGIN
DO NOT WRITE IN THIS MARGIN
DO NOT WRITE IN THIS MARGIN

GradeMax

2 **(a)** State Hooke's law.

.....

..... [1]

(b) In an experiment to determine the spring constant of a spring X, a student measures the original length of the spring. The student then suspends an object in equilibrium from the spring and measures the final length of the spring.

The spring does not extend beyond its limit of proportionality.

The measurements taken by the student are shown in Table 2.1.

Table 2.1

original length of spring X	(2.1 ± 0.1) cm
final length of spring X	(14.0 ± 0.1) cm
mass of suspended object	(0.300 ± 0.005) kg

Calculate:

(i) the extension, in cm, of spring X together with its absolute uncertainty

extension = (..... ± .....) cm [1]

(ii) the spring constant of spring X

spring constant = ... $N m^{-1}$ [3]

DO NOT WRITE IN THIS MARGIN
DO NOT WRITE IN THIS MARGIN
DO NOT WRITE IN THIS MARGIN
DO NOT WRITE IN THIS MARGIN
DO NOT WRITE IN THIS MARGIN

© Cambridge University Press & Assessment 2026

GradeMax

(iii) the percentage uncertainty in the value of the spring constant calculated in **2(b)(ii)** due to the uncertainties in the measurements.

percentage uncertainty = ...% [2]

(c) An identical object to the one in **2(b)** is suspended in equilibrium from a spring Y that has a greater spring constant than spring X.

Spring Y does not extend beyond its limit of proportionality.

Describe and explain any difference in:

(i) the extension of the springs

.....

..... [1]

(ii) the elastic potential energy of the springs.

.....

.....

.....

..... [2]

[Total: 10]

DO NOT WRITE IN THIS MARGIN
DO NOT WRITE IN THIS MARGIN
DO NOT WRITE IN THIS MARGIN
DO NOT WRITE IN THIS MARGIN
DO NOT WRITE IN THIS MARGIN

© Cambridge University Press & Assessment 2026

GradeMax

3 A stretched string is attached to two fixed points and a vibration generator as shown in Figure 3.1.

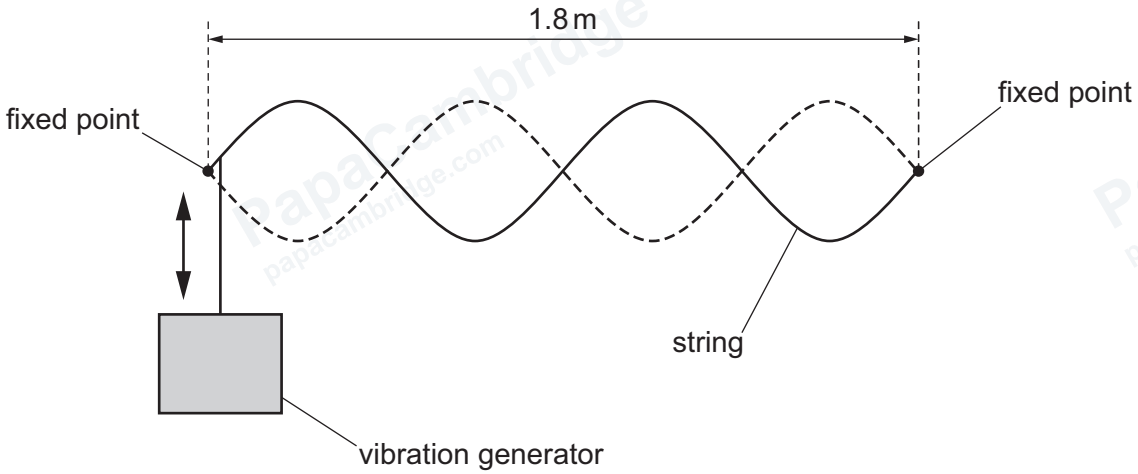

Figure 3.1

The vibration generator oscillates vertically and a stationary wave is formed on the string.

(a) Explain how the stationary wave is formed on the string.

.....

.....

.....

.....

..... [2]

(b) On Figure 3.1, draw **one** cross (×) at the position of a node. [1]

DO NOT WRITE IN THIS MARGIN
DO NOT WRITE IN THIS MARGIN
DO NOT WRITE IN THIS MARGIN
DO NOT WRITE IN THIS MARGIN
DO NOT WRITE IN THIS MARGIN

© Cambridge University Press & Assessment 2026

GradeMax

(c) The distance between the fixed points is 1.8 m. The vibration generator oscillates at a frequency of 26 Hz.

Calculate the speed of progressive waves on the string.

speed = ... $m\,s^{-1}$ [3]

(d) The frequency of the vibration generator is now halved and a new stationary wave is formed on the string. The speed of progressive waves on the string is unchanged.

On Figure 3.2, draw the string at an instant when it has maximum displacement.

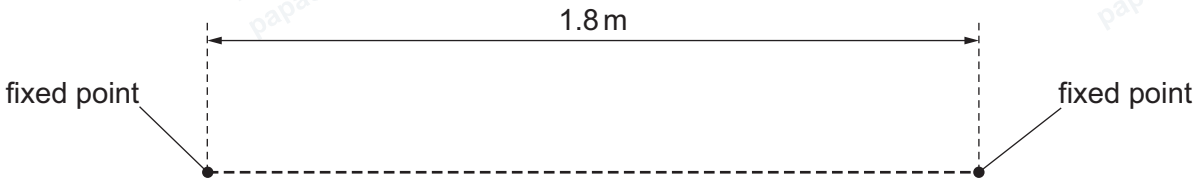

Figure 3.2

[2]

[Total: 8]

DO NOT WRITE IN THIS MARGIN
DO NOT WRITE IN THIS MARGIN
DO NOT WRITE IN THIS MARGIN
DO NOT WRITE IN THIS MARGIN
DO NOT WRITE IN THIS MARGIN

4 An object is held at rest just below the surface of a liquid of uniform density as shown in Figure 4.1.

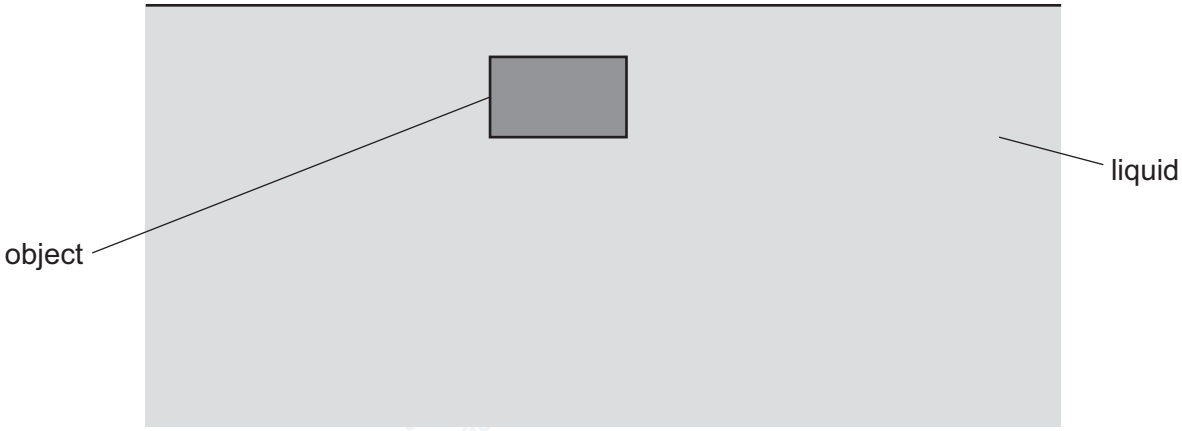

Figure 4.1

The object is released and accelerates downwards until it reaches terminal velocity.

The magnitude of the weight of the object is *W*.
The magnitude of the upthrust acting on the object is *U*.
The magnitude of the drag force acting on the object is *D*.

(a) By placing **one** tick (✓) in each row, complete Table 4.1 to show what happens to the magnitude of the three forces acting on the object as it accelerates.

Table 4.1

force	increases	stays the same	decreases
W			
D			
U			

[3]

(b) State an expression, in terms of *W*, *D* and *U*, that shows the relationship between the forces acting on the object when the object is at its terminal velocity.

[1]

DO NOT WRITE IN THIS MARGIN
DO NOT WRITE IN THIS MARGIN
DO NOT WRITE IN THIS MARGIN
DO NOT WRITE IN THIS MARGIN
DO NOT WRITE IN THIS MARGIN

© Cambridge University Press & Assessment 2026

GradeMax

(c) The object has a mass of 0.070 kg and a volume of $1.0 \times 10^{-5}\,m^3$.

The density of the liquid is $1100\,kg\,m^{-3}$.

Calculate D when the object is at terminal velocity.

D = ... N [3]

[Total: 7]

DO NOT WRITE IN THIS MARGIN
DO NOT WRITE IN THIS MARGIN
DO NOT WRITE IN THIS MARGIN
DO NOT WRITE IN THIS MARGIN
DO NOT WRITE IN THIS MARGIN

GradeMax

5 The I–V characteristic of an electrical component X is shown in Figure 5.1.

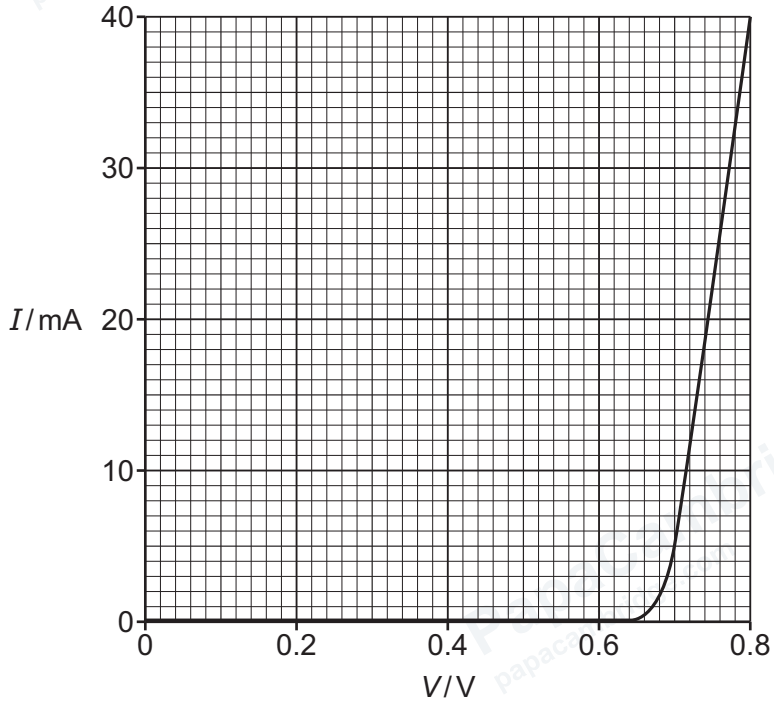

Figure 5.1

(a) State the name of electrical component X.

..... [1]

(b) A metallic conductor has a constant resistance of 40 Ω. On Figure 5.1, sketch the I–V characteristic of this conductor between $V = 0$ and $V = 0.80$ V. [2]

DO NOT WRITE IN THIS MARGIN
DO NOT WRITE IN THIS MARGIN
DO NOT WRITE IN THIS MARGIN
DO NOT WRITE IN THIS MARGIN
DO NOT WRITE IN THIS MARGIN

© Cambridge University Press & Assessment 2026

GradeMax

(c) Component X is connected in a circuit with a resistor of resistance 20 Ω as shown in Figure 5.2.

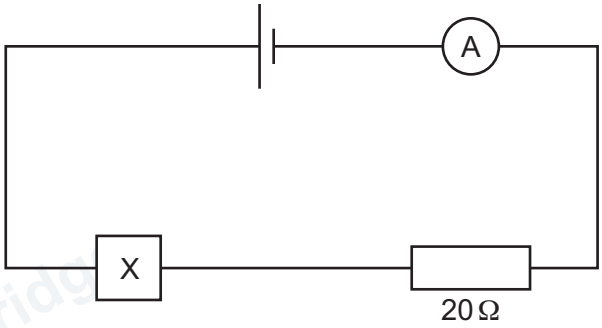

Figure 5.2

The current in the ammeter is 5.0 mA and the cell has negligible internal resistance.

Show that the electromotive force (e.m.f.) of the cell is 0.80 V.

[3]

(d) The terminals of the cell in **5(c)** are now reversed without making any other changes to the circuit.

State the reading on the ammeter.

reading on ammeter = ...A [1]

DO NOT WRITE IN THIS MARGIN
DO NOT WRITE IN THIS MARGIN
DO NOT WRITE IN THIS MARGIN
DO NOT WRITE IN THIS MARGIN
DO NOT WRITE IN THIS MARGIN

© Cambridge University Press & Assessment 2026

(e) The resistor of resistance 20 Ω and component X are now connected in parallel to the cell in **5(c)** in the circuit shown in Figure 5.3.

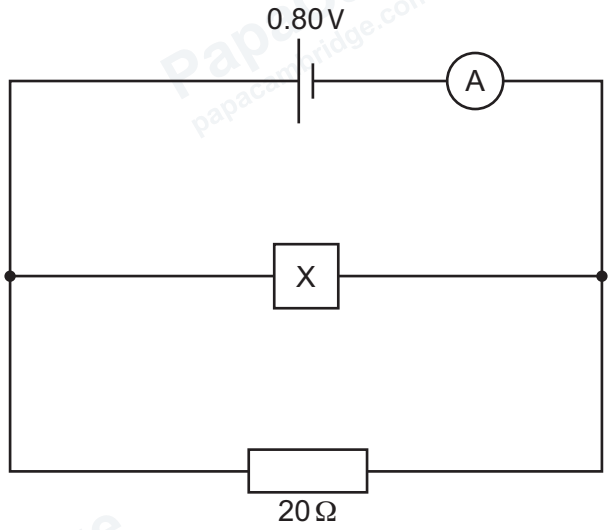

Figure 5.3

The current in component X is **not** negligible.

Use Figure 5.1 to determine the current in the ammeter.

current = ...A [3]

[Total: 10]

© Cambridge University Press & Assessment 2026

GradeMax

DO NOT WRITE IN THIS MARGIN

DO NOT WRITE IN THIS MARGIN

DO NOT WRITE IN THIS MARGIN

DO NOT WRITE IN THIS MARGIN

DO NOT WRITE IN THIS MARGIN

GradeMax

DO NOT WRITE IN THIS MARGIN
DO NOT WRITE IN THIS MARGIN
DO NOT WRITE IN THIS MARGIN
DO NOT WRITE IN THIS MARGIN
DO NOT WRITE IN THIS MARGIN

6 A nichrome wire of cross-sectional area $5.7 \times 10^{-8}\,m^2$ is connected to a power supply. The potential difference (p.d.) across the wire is 230 V. The power dissipated in the wire is 1.0 kW.

(a) Show that the resistance of the wire is 53 Ω.

[2]

(b) The resistivity of nichrome is $1.3 \times 10^{-6}\,\Omega\,m$.

Calculate the length of the wire.

length = ... m [2]

(c) The average drift speed of the charge carriers (free electrons) in the nichrome wire is $5.4 \times 10^{-3}\,m\,s^{-1}$.

Calculate the number density of charge carriers of nichrome.

number density = ... m^{-3} [3]

[Total: 7]

© Cambridge University Press & Assessment 2026

7 (a) (i) State what is meant by isotopes.

.....

.....

..... [2]

(ii) A thorium-232 nucleus ($^{232}_{90}$Th) undergoes radioactive decay to form another nucleus. A sequence of further decays occurs until a nucleus is formed that is another isotope of thorium. In each decay, either a single α-particle or a single β^- particle is emitted.

Determine the minimum numbers of α-particles and β^- particles that could be emitted during the sequence of decays to form the other isotope of thorium from thorium-232.

minimum number of α-particles = ...

minimum number of β^- particles = ...
[2]

(iii) Complete Figure 7.1 to show the nucleon number and proton number of the thorium isotope formed by the sequence of decays.

.....
..... Th

Figure 7.1

[2]

(b) (i) State the quark composition of a proton.

..... [1]

(ii) Describe the change to the quark composition of the proton when it undergoes β^+ decay.

.....

..... [1]

[Total: 8]

Permission to reproduce items where third-party owned material protected by copyright is included has been sought and cleared where possible. Every reasonable effort has been made by the publisher (Cambridge University Press & Assessment) to trace copyright holders, but if any items requiring clearance have unwittingly been included, the publisher will be pleased to make amends at the earliest possible opportunity.

To avoid the issue of disclosure of answer-related information to candidates, all copyright acknowledgements are reproduced online in our Copyright Acknowledgements Booklet. This is produced for each series of examinations and is freely available to download at www.cambridgeinternational.org after the live examination series.

Cambridge International Education is the name of our awarding body and a part of Cambridge University Press & Assessment, which is a department of the University of Cambridge.

© Cambridge University Press & Assessment 2026

DO NOT WRITE IN THIS MARGIN
DO NOT WRITE IN THIS MARGIN
DO NOT WRITE IN THIS MARGIN
DO NOT WRITE IN THIS MARGIN
DO NOT WRITE IN THIS MARGIN