GradeMax

* 0000800000001 * DFD

CAMBRIDGE
International Education

Cambridge International AS & A Level

CANDIDATE NAME

CENTRE NUMBER

CANDIDATE NUMBER

3411300686

PHYSICS **9702/31**

Paper 3 Advanced Practical Skills 1 **May/June 2026**

2 hours

You must answer on the question paper.

You will need: The materials and apparatus listed in the confidential instructions

INSTRUCTIONS

- Answer **all** questions.
- Use a black or dark blue pen. You may use an HB pencil for any diagrams or graphs.
- Write your name, centre number and candidate number in the boxes at the top of the page.
- Write your answer to each question in the space provided.
- Do **not** use an erasable pen. Do **not** use correction fluid or tape.
- Do **not** write on any bar codes.
- You will be allowed to work with the apparatus for a maximum of 1 hour for each question.
- You should record all your observations in the spaces provided in the question paper as soon as these observations are made.
- You may use a calculator.
- You should show all your working and use appropriate units.

INFORMATION

- The total mark for this paper is 40.
- The number of marks for each question or part question is shown in brackets [ ].

For Examiner's Use	
1	
2	
Total	

This document has **12** pages.

DC (CE/FC) 356176/2
© Cambridge University Press & Assessment 2026

[Turn over

GradeMax

You may not need to use all of the materials provided.

1 In this experiment, you will investigate an electrical circuit.

You have been provided with several resistors, each with a different value of resistance.

(a)
- Set up the circuit shown in Figure 1.1.
- Select the 18 Ω resistor and connect it so that resistance R is 18 Ω.

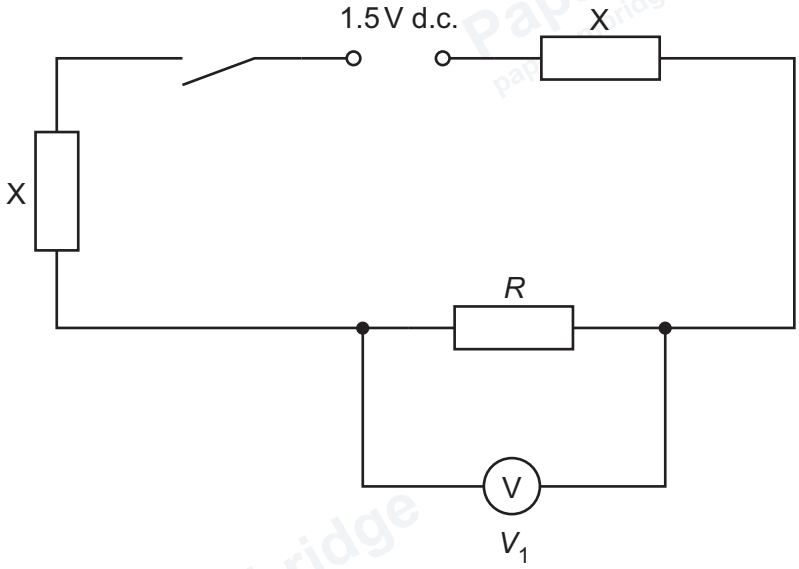

Figure 1.1

- Close the switch.
- Record R and the voltmeter reading V_1.

R = ...

V_1 = ...

- Open the switch.

[1]

DO NOT WRITE IN THIS MARGIN
DO NOT WRITE IN THIS MARGIN
DO NOT WRITE IN THIS MARGIN
DO NOT WRITE IN THIS MARGIN
DO NOT WRITE IN THIS MARGIN

© Cambridge University Press & Assessment 2026

GradeMax

(b) (i) • Connect a wire W as shown in Figure 1.2.

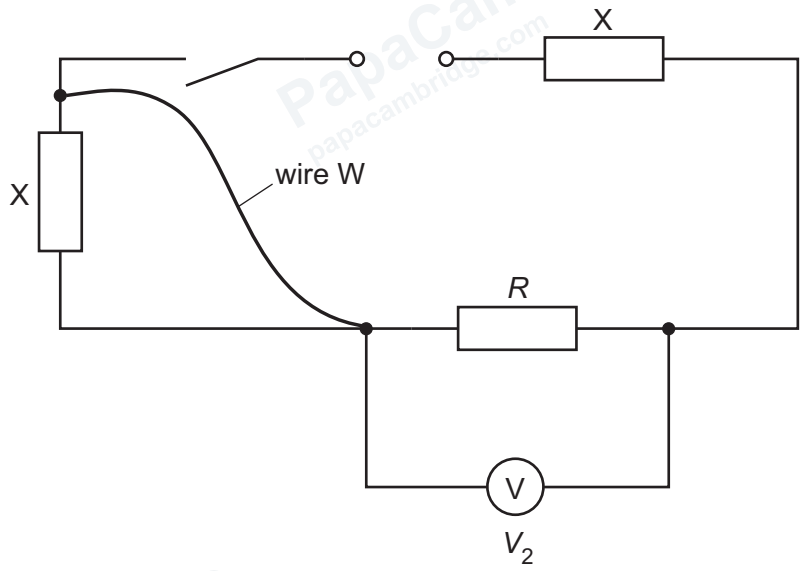

Figure 1.2

- Close the switch.
- Record the voltmeter reading V_2.

V_2 = ...

- Open the switch.
- Remove wire W.

[1]

(ii) Calculate $\frac{V_1}{V_2 - V_1}$.

$\frac{V_1}{V_2 - V_1}$ = ... [1]

DO NOT WRITE IN THIS MARGIN
DO NOT WRITE IN THIS MARGIN
DO NOT WRITE IN THIS MARGIN
DO NOT WRITE IN THIS MARGIN
DO NOT WRITE IN THIS MARGIN

© Cambridge University Press & Assessment 2026

(c) Vary R by using a different resistor. Record R, V_1 and V_2. Repeat until you have six sets of readings of R, V_1 and V_2. Include your values from **1(a)** and **1(b)**.

Record your results in a table. Include values of $\frac{V_1}{V_2 - V_1}$ in your table.

[8]

(d) (i) Plot a graph of $\frac{V_1}{V_2 - V_1}$ on the y-axis against R on the x-axis. [3]

(ii) Draw the straight line of best fit. [1]

(iii) Determine the gradient and y-intercept of this line.

gradient = ...

y-intercept = ...

[2]

© Cambridge University Press & Assessment 2026

DO NOT WRITE IN THIS MARGIN
DO NOT WRITE IN THIS MARGIN
DO NOT WRITE IN THIS MARGIN
DO NOT WRITE IN THIS MARGIN
DO NOT WRITE IN THIS MARGIN

GradeMax

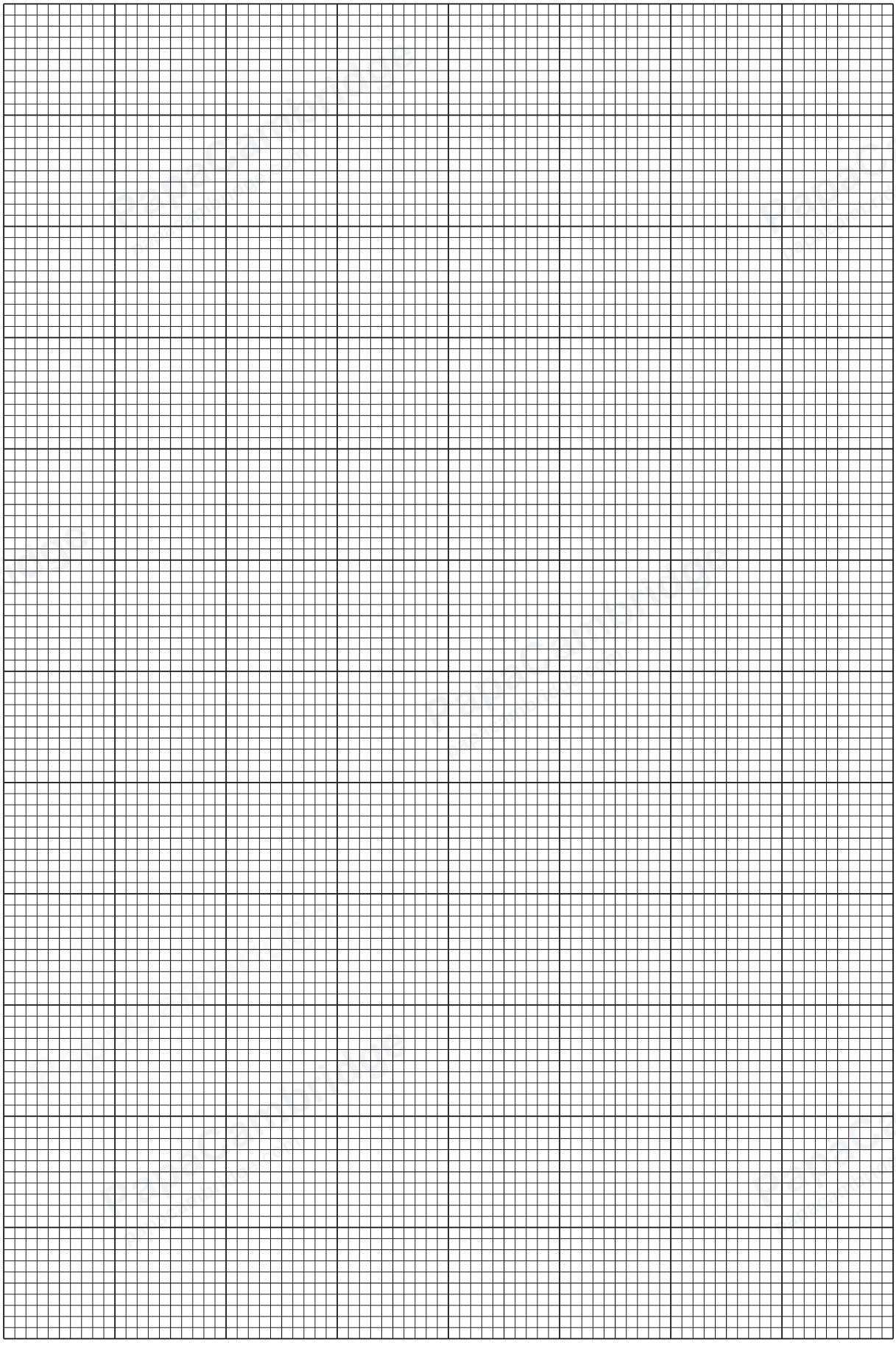

DO NOT WRITE IN THIS MARGIN
DO NOT WRITE IN THIS MARGIN
DO NOT WRITE IN THIS MARGIN
DO NOT WRITE IN THIS MARGIN
DO NOT WRITE IN THIS MARGIN

(e) It is suggested that the quantities V_1, V_2 and R are related by the equation

$$\frac{V_1}{V_2 - V_1} = PR + Q$$

where P and Q are constants.

Using your answers in **1(d)(iii)**, determine values for P and Q.
Give appropriate units.

P = ...

Q = ...
[2]

(f) The resistance of each resistor X is X.

Theory suggests that $P = \frac{1}{X}$ and that Q is independent of X.

A student repeats the experiment using a smaller value of X.

Sketch a second line on the graph to show the expected results.
Label this line Z.

[1]

[Total: 20]

© Cambridge University Press & Assessment 2026

GradeMax

DO NOT WRITE IN THIS MARGIN

DO NOT WRITE IN THIS MARGIN

DO NOT WRITE IN THIS MARGIN

DO NOT WRITE IN THIS MARGIN

PapaCambridge papacambridge.com

GradeMax

You may not need to use all of the materials provided.

2 In this experiment, you will investigate the oscillations of a spring system.

You have been provided with three springs connected together.

(a)
- Choose one of the **end** springs (**not** the middle one). This is spring A.
- The length of the coiled section of spring A is l_0, as shown in Figure 2.1.

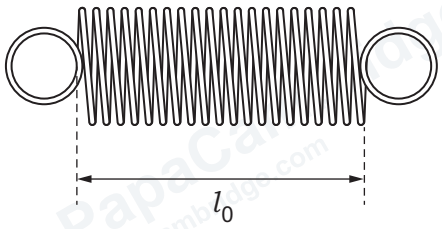

Figure 2.1

Measure and record l_0.

l_0 = ... [1]

DO NOT WRITE IN THIS MARGIN
DO NOT WRITE IN THIS MARGIN
DO NOT WRITE IN THIS MARGIN
DO NOT WRITE IN THIS MARGIN
DO NOT WRITE IN THIS MARGIN

© Cambridge University Press & Assessment 2026

(b) • Set up the apparatus as shown in Figure 2.2.

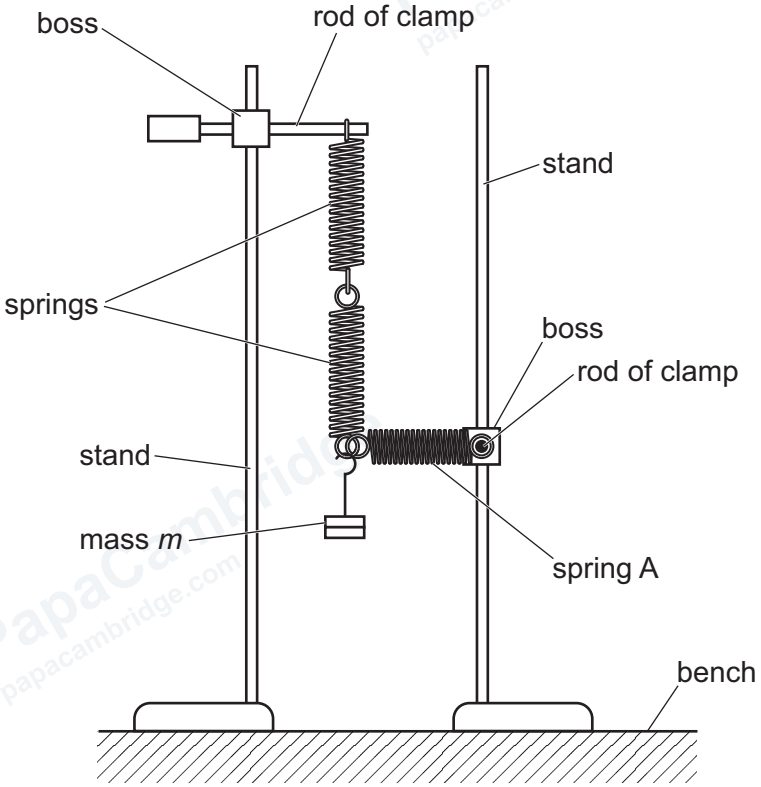

Figure 2.2

- Hang a mass *m* of 200 g from the springs as shown in Figure 2.2.
- Record the value of *m*.

m = ... g

- Adjust the apparatus until spring A is horizontal and unstretched with a coiled section of length l_0 and the other two springs are vertical.
- Gently pull the mass down through a short distance. When released, the mass will oscillate.
- Take measurements to determine the period T_0 of the oscillations.

T_0 = ...
[2]

© Cambridge University Press & Assessment 2026

GradeMax

DO NOT WRITE IN THIS MARGIN
DO NOT WRITE IN THIS MARGIN
DO NOT WRITE IN THIS MARGIN
DO NOT WRITE IN THIS MARGIN
DO NOT WRITE IN THIS MARGIN

GradeMax

DO NOT WRITE IN THIS MARGIN
DO NOT WRITE IN THIS MARGIN
DO NOT WRITE IN THIS MARGIN
DO NOT WRITE IN THIS MARGIN
DO NOT WRITE IN THIS MARGIN

(c) (i) • Adjust the apparatus so that the coiled section of spring A is extended to a length of approximately l_0 + 4.5 cm and spring A is horizontal, as shown in Figure 2.3.

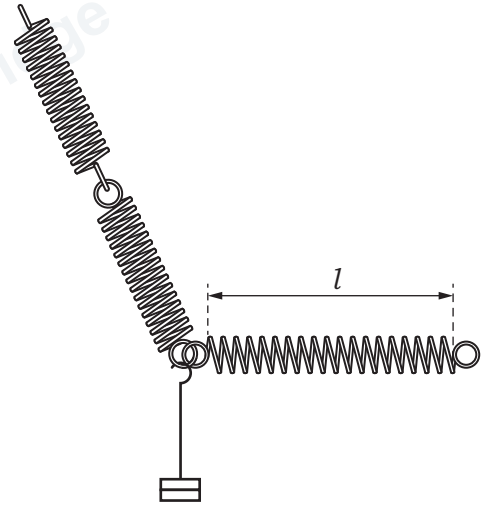

Figure 2.3

• Measure and record the extended length l of the coiled section of spring A.

l = ...

• Calculate the extension e of spring A, where

$e = l - l_0$.

e = ...
[1]

(ii) Estimate the percentage uncertainty in your value of e. Show your working.

percentage uncertainty = ... % [1]

© Cambridge University Press & Assessment 2026

GradeMax

(d) (i)
- Gently pull the mass down through a short distance. When released, the mass will oscillate.
- Take measurements to determine the period T of the oscillations.

T = ... [1]

(ii) Calculate $(T_0 - T)$.

$(T_0 - T)$ = ... [1]

(e) Repeat **2(b)**, **2(c)(i)** and **2(d)** using a value of m = 300 g and a value for the length of the coiled section of spring A of approximately l_0 + 6.5 cm.

m = ... g

T_0 = ...

l = ...

e = ...

T = ...

$(T_0 - T)$ = ...
[3]

DO NOT WRITE IN THIS MARGIN
DO NOT WRITE IN THIS MARGIN
DO NOT WRITE IN THIS MARGIN
DO NOT WRITE IN THIS MARGIN
DO NOT WRITE IN THIS MARGIN

© Cambridge University Press & Assessment 2026

GradeMax

(f) It is suggested that the relationship between T_0, T, e and m is

$$(T_0 - T) = \frac{Ce}{\sqrt{m}}$$

where C is a constant.

Using your data, calculate **two** values of C.

first value of C = ...

second value of C = ...
[1]

(g) It is suggested that the percentage uncertainty in the values of C is 15%.

Using this uncertainty, explain whether your results support the relationship in **2(f)**.

.....

.....

.....

..... [1]

DO NOT WRITE IN THIS MARGIN
DO NOT WRITE IN THIS MARGIN
DO NOT WRITE IN THIS MARGIN
DO NOT WRITE IN THIS MARGIN
DO NOT WRITE IN THIS MARGIN

GradeMax

(h) (i) Describe **four** sources of uncertainty or limitations of the procedure for this experiment.

For any uncertainties in measurement that you describe, you should state the quantity being measured and a reason for the uncertainty.

1 .....

.....

2 .....

.....

3 .....

.....

4 .....

.....

[4]

(ii) Describe **four** improvements that could be made to this experiment. You may suggest the use of other apparatus or different procedures.

1 .....

.....

2 .....

.....

3 .....

.....

4 .....

.....

[4]

[Total: 20]

Permission to reproduce items where third-party owned material protected by copyright is included has been sought and cleared where possible. Every reasonable effort has been made by the publisher (Cambridge University Press & Assessment) to trace copyright holders, but if any items requiring clearance have unwittingly been included, the publisher will be pleased to make amends at the earliest possible opportunity.

To avoid the issue of disclosure of answer-related information to candidates, all copyright acknowledgements are reproduced online in our Copyright Acknowledgements Booklet. This is produced for each series of examinations and is freely available to download at www.cambridgeinternational.org after the live examination series.

Cambridge International Education is the name of our awarding body and a part of Cambridge University Press & Assessment, which is a department of the University of Cambridge.

© Cambridge University Press & Assessment 2026

DO NOT WRITE IN THIS MARGIN DO NOT WRITE IN THIS MARGIN DO NOT WRITE IN THIS MARGIN DO NOT WRITE IN THIS MARGIN DO NOT WRITE IN THIS MARGIN