GradeMax

* 0000800000001 * DFD

CAMBRIDGE
International Education

Cambridge International AS & A Level

CANDIDATE NAME

CENTRE NUMBER

CANDIDATE NUMBER

2536337568

PHYSICS **9702/32**

Paper 3 Advanced Practical Skills 2 **May/June 2026**

2 hours

You must answer on the question paper.

You will need: The materials and apparatus listed in the confidential instructions

INSTRUCTIONS

- Answer **all** questions.
- Use a black or dark blue pen. You may use an HB pencil for any diagrams or graphs.
- Write your name, centre number and candidate number in the boxes at the top of the page.
- Write your answer to each question in the space provided.
- Do **not** use an erasable pen. Do **not** use correction fluid or tape.
- Do **not** write on any bar codes.
- You will be allowed to work with the apparatus for a maximum of 1 hour for each question.
- You should record all your observations in the spaces provided in the question paper as soon as these observations are made.
- You may use a calculator.
- You should show all your working and use appropriate units.

INFORMATION

- The total mark for this paper is 40.
- The number of marks for each question or part question is shown in brackets [ ].

For Examiner's Use	
1	
2	
Total	

This document has **16** pages. Any blank pages are indicated.

DC (WW/CGW) 356664/2
© Cambridge University Press & Assessment 2026

[Turn over

GradeMax

You may not need to use all of the materials provided.

1 In this experiment, you will investigate the equilibrium of forces.

(a)
- Assemble the apparatus as shown in Figure 1.1.
- Adjust the bosses so that both nails are 55.0 cm above the bench.
- Hang a mass D of 300 g from the loop of the short string.
- Adjust the distance between the stands so that the section of string between points A and B is perpendicular to the section of string between points B and C.

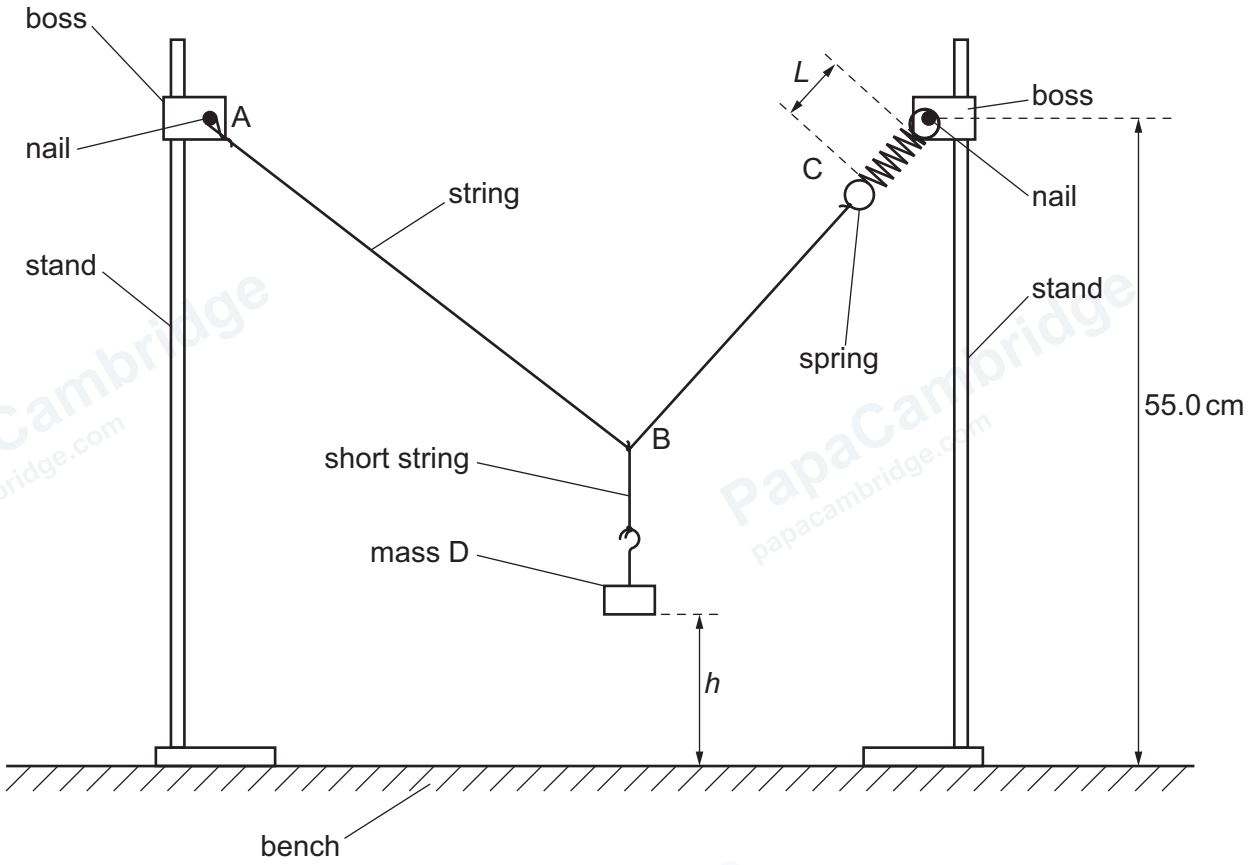

Figure 1.1

© Cambridge University Press & Assessment 2026

DO NOT WRITE IN THIS MARGIN
DO NOT WRITE IN THIS MARGIN
DO NOT WRITE IN THIS MARGIN
DO NOT WRITE IN THIS MARGIN
DO NOT WRITE IN THIS MARGIN

GradeMax

- The mass of D is m. Record m.

m = ...

- The length of the coiled part of the spring is L.

  The distance between the bottom of D and the bench is h.

  Measure and record L and h.

L = ...

h = ...

- Calculate T, where $T = L + h$.

T = ...
[2]

DO NOT WRITE IN THIS MARGIN
DO NOT WRITE IN THIS MARGIN
DO NOT WRITE IN THIS MARGIN
DO NOT WRITE IN THIS MARGIN
DO NOT WRITE IN THIS MARGIN

PapaCambridge papacambridge.com

(b) Change m and adjust the distance between the stands so that the section of string between points A and B is perpendicular to the section of string between points B and C. Measure and record L and h. Repeat until you have six sets of values of m, L and h.

Record your results in a table. Include values of T in your table.

[10]

(c) (i) Plot a graph of T on the y-axis against m on the x-axis. [3]

(ii) Draw the straight line of best fit. [1]

(iii) Determine the gradient and y-intercept of this line.

gradient = ...

y-intercept = ...
[2]

DO NOT WRITE IN THIS MARGIN
DO NOT WRITE IN THIS MARGIN
DO NOT WRITE IN THIS MARGIN
DO NOT WRITE IN THIS MARGIN
DO NOT WRITE IN THIS MARGIN

© Cambridge University Press & Assessment 2026

GradeMax

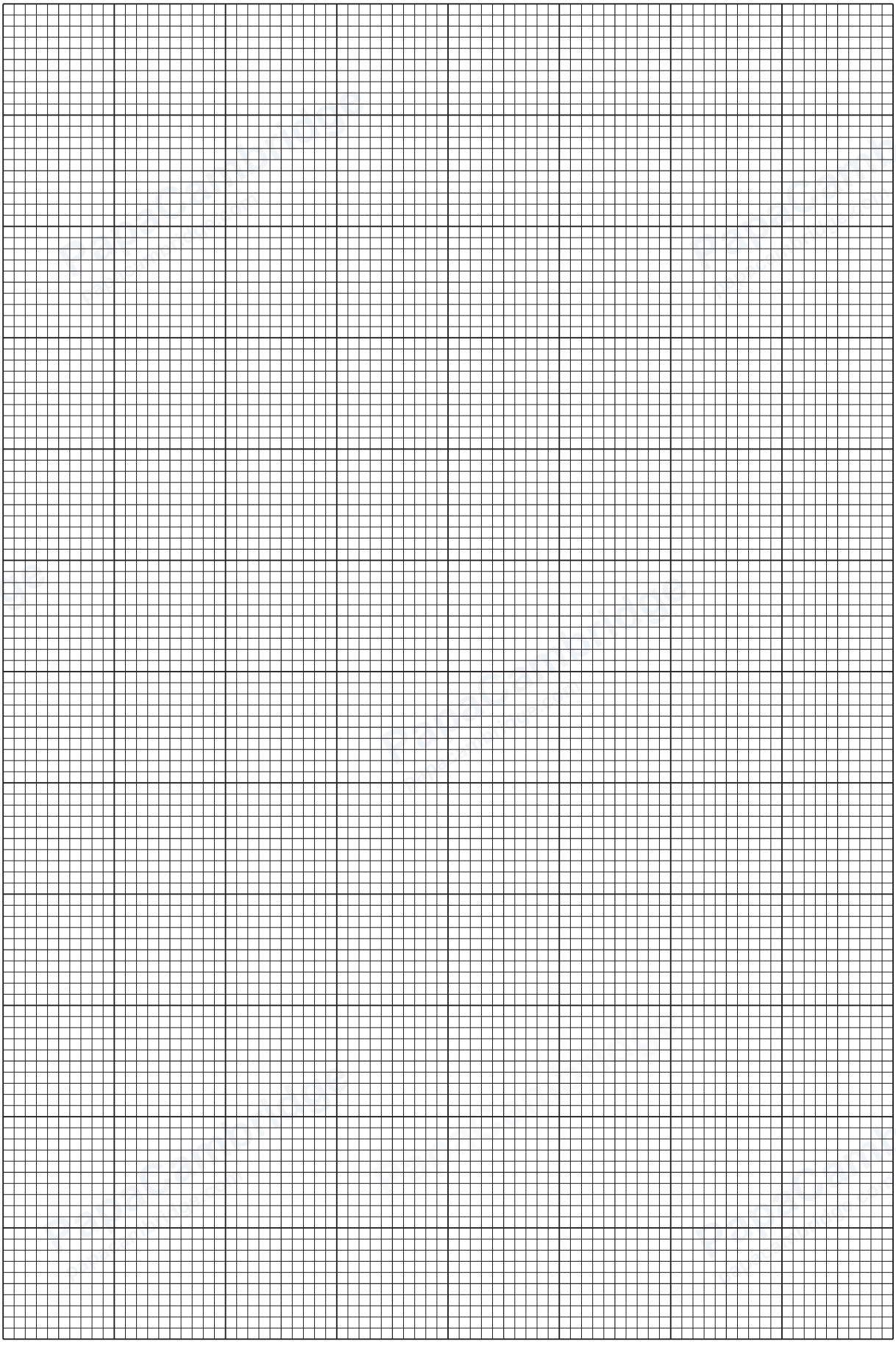

DO NOT WRITE IN THIS MARGIN
DO NOT WRITE IN THIS MARGIN
DO NOT WRITE IN THIS MARGIN
DO NOT WRITE IN THIS MARGIN
DO NOT WRITE IN THIS MARGIN

GradeMax

(d) It is suggested that the quantities T and m are related by the equation

$$T = pm + q$$

where p and q are constants.

Use your answers in **1(c)(iii)** to determine the values of p and q.
Give appropriate units.

p = ...

q = ...
[2]

[Total: 20]

DO NOT WRITE IN THIS MARGIN
DO NOT WRITE IN THIS MARGIN
DO NOT WRITE IN THIS MARGIN
DO NOT WRITE IN THIS MARGIN
DO NOT WRITE IN THIS MARGIN

© Cambridge University Press & Assessment 2026

GradeMax

You may not need to use all of the materials provided.

2 In this experiment, you will investigate the force applied by water on a copper wire loop.

(a) You have been provided with three copper wires. Each wire has a hook at one end. Two of the wires have a loop at the other end. The loops have different diameters.

- Using the wire with the loop of the **smaller** diameter, assemble the apparatus as shown in Figure 2.1.
- The pin passes through the central hole in the card and is pushed into the cork, which is held in the clamp.

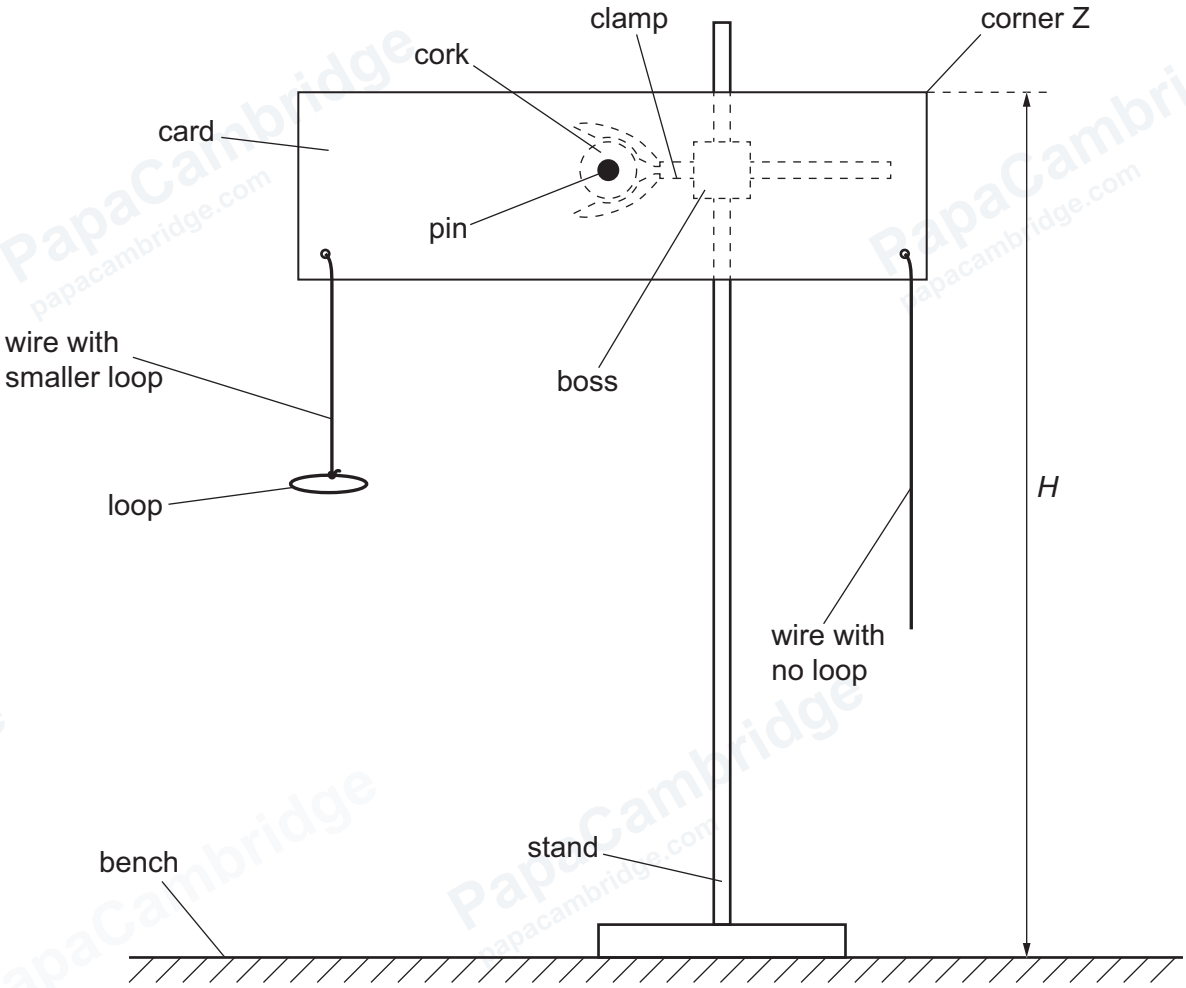

Figure 2.1

- Adjust the height of the boss holding the clamp so that the pin is approximately 40 cm above the bench.
- Check that the card pivots freely on the pin.

DO NOT WRITE IN THIS MARGIN
DO NOT WRITE IN THIS MARGIN
DO NOT WRITE IN THIS MARGIN
DO NOT WRITE IN THIS MARGIN
DO NOT WRITE IN THIS MARGIN

© Cambridge University Press & Assessment 2026

- The height of corner Z above the bench is *H*, as shown in Figure 2.1.

  Measure and record *H*.

H = ... cm

- In Table 2.1, record this value of *H* in the row *n* = 0.

[1]

(b) • You have been provided with four paper clips.

Attach **one** paper clip onto the loop of the wire hanging from the card. The card will tilt.

- The number of paper clips attached onto the loop of the wire is *n*.

  Measure *H* and record this value in Table 2.1.

Table 2.1

n	***H*/cm**
0	
1	
2	
3	
4	

- Add more paper clips, and record the corresponding values of *H* in Table 2.1.
- Remove the paper clips from the loop.
- On Figure 2.2, plot a graph of *H* on the *y*-axis against *n* on the *x*-axis.
- Draw the curved line of best fit.

© Cambridge University Press & Assessment 2026

GradeMax

DO NOT WRITE IN THIS MARGIN

DO NOT WRITE IN THIS MARGIN

DO NOT WRITE IN THIS MARGIN

DO NOT WRITE IN THIS MARGIN

DO NOT WRITE IN THIS MARGIN

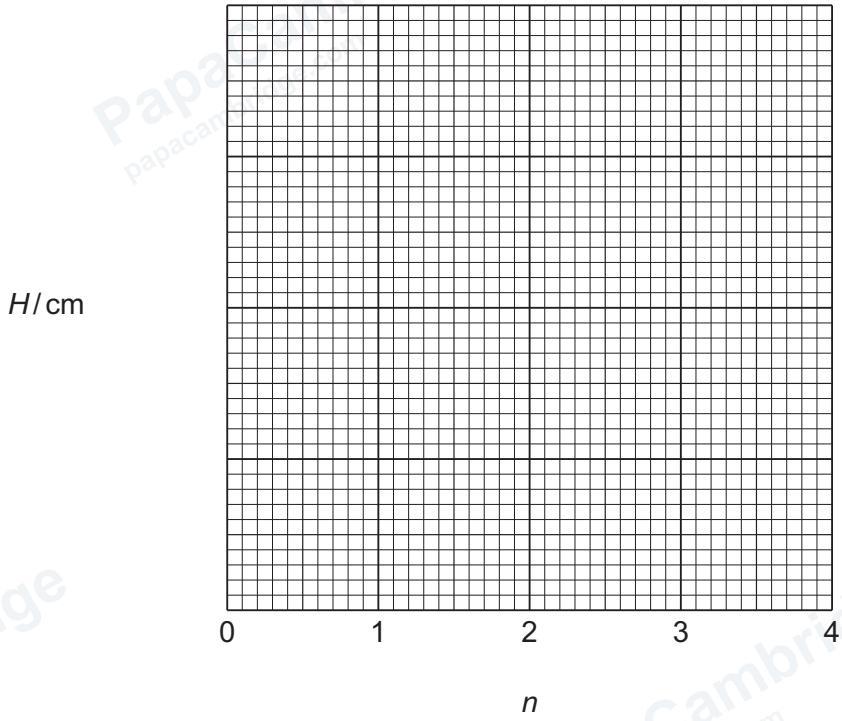

Figure 2.2

[1]

(c) (i) • Lift up the beaker of water so that the loop just touches the water surface.

• Slowly lower the beaker so that the card tilts, as shown in Figure 2.3.

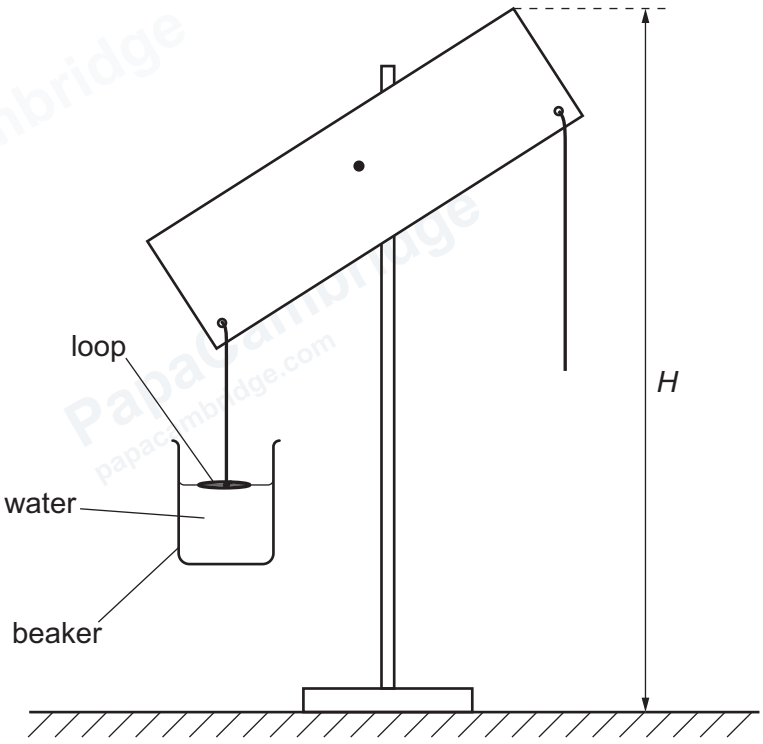

Figure 2.3

DO NOT WRITE IN THIS MARGIN
DO NOT WRITE IN THIS MARGIN
DO NOT WRITE IN THIS MARGIN
DO NOT WRITE IN THIS MARGIN
DO NOT WRITE IN THIS MARGIN

- Continue to lower the beaker until the loop breaks away from the water surface.
- Measure and record the value of H at the instant when the loop breaks away from the water surface.

H = ... cm [2]

(ii) Estimate the percentage uncertainty in this value of H. Show your working.

percentage uncertainty = ... % [1]

(iii)
- Use Figure 2.2 to determine the value of n, to the nearest 0.1, that corresponds to this value of H.

n = ...

- The force F applied by the water is given by

$$F = nW$$

where W has the value 0.0032 N.

Calculate F.

F = ... N
[1]

(d)
- Remove the wire with the loop from the card.
- Measure and record the diameter d of the loop.

d = ... [1]

© Cambridge University Press & Assessment 2026

DO NOT WRITE IN THIS MARGIN
DO NOT WRITE IN THIS MARGIN
DO NOT WRITE IN THIS MARGIN
DO NOT WRITE IN THIS MARGIN
DO NOT WRITE IN THIS MARGIN

GradeMax

(e) • Hang the wire with the **larger** loop from the card.

• Repeat **2(c)(i)**, **2(c)(iii)** and **2(d)** using the wire with the larger loop.

H = ... cm

n = ...

F = ... N

d = ...

[2]

(f) It is suggested that F and d are related by

$$F = 2\pi dk$$

where k is a constant.

(i) Using your data, calculate **two** values of k.

first value of k = ...

second value of k = ...

[1]

(ii) Justify the number of significant figures that you have given for your values of k.

.....

.....

..... [1]

© Cambridge University Press & Assessment 2026

DO NOT WRITE IN THIS MARGIN
DO NOT WRITE IN THIS MARGIN
DO NOT WRITE IN THIS MARGIN
DO NOT WRITE IN THIS MARGIN
DO NOT WRITE IN THIS MARGIN

GradeMax

(g) It is suggested that the uncertainty in the values of k is 10%.

Using this uncertainty, explain whether your results support the relationship in **2(f)**.

.....

.....

.....

..... [1]

DO NOT WRITE IN THIS MARGIN
DO NOT WRITE IN THIS MARGIN
DO NOT WRITE IN THIS MARGIN
DO NOT WRITE IN THIS MARGIN
DO NOT WRITE IN THIS MARGIN

© Cambridge University Press & Assessment 2026

GradeMax

(h) (i) Describe **four** sources of uncertainty or limitations of the procedure for this experiment.

For any uncertainties in measurement that you describe, you should state the quantity being measured and a reason for the uncertainty.

1 .....

.....

2 .....

.....

3 .....

.....

4 .....

.....

[4]

(ii) Describe **four** improvements that could be made to this experiment. You may suggest the use of other apparatus or different procedures.

1 .....

.....

2 .....

.....

3 .....

.....

4 .....

.....

[4]

[Total: 20]

DO NOT WRITE IN THIS MARGIN
DO NOT WRITE IN THIS MARGIN
DO NOT WRITE IN THIS MARGIN
DO NOT WRITE IN THIS MARGIN
DO NOT WRITE IN THIS MARGIN

© Cambridge University Press & Assessment 2026

GradeMax

BLANK PAGE

DO NOT WRITE IN THIS MARGIN
DO NOT WRITE IN THIS MARGIN
DO NOT WRITE IN THIS MARGIN
DO NOT WRITE IN THIS MARGIN
DO NOT WRITE IN THIS MARGIN

© Cambridge University Press & Assessment 2026

GradeMax

BLANK PAGE

DO NOT WRITE IN THIS MARGIN
DO NOT WRITE IN THIS MARGIN
DO NOT WRITE IN THIS MARGIN
DO NOT WRITE IN THIS MARGIN
DO NOT WRITE IN THIS MARGIN

© Cambridge University Press & Assessment 2026

GradeMax

BLANK PAGE

DO NOT WRITE IN THIS MARGIN
DO NOT WRITE IN THIS MARGIN
DO NOT WRITE IN THIS MARGIN
DO NOT WRITE IN THIS MARGIN
DO NOT WRITE IN THIS MARGIN

Permission to reproduce items where third-party owned material protected by copyright is included has been sought and cleared where possible. Every reasonable effort has been made by the publisher (Cambridge University Press & Assessment) to trace copyright holders, but if any items requiring clearance have unwittingly been included, the publisher will be pleased to make amends at the earliest possible opportunity.

To avoid the issue of disclosure of answer-related information to candidates, all copyright acknowledgements are reproduced online in our Copyright Acknowledgements Booklet. This is produced for each series of examinations and is freely available to download at www.cambridgeinternational.org after the live examination series.

Cambridge International Education is the name of our awarding body and a part of Cambridge University Press & Assessment, which is a department of the University of Cambridge.

© Cambridge University Press & Assessment 2026