GradeMax

* 0000800000001 *

CAMBRIDGE
International Education

Cambridge International AS & A Level

CANDIDATE NAME

CENTRE NUMBER

CANDIDATE NUMBER

1111853383 1

PHYSICS **9702/35**

Paper 3 Advanced Practical Skills 1 **May/June 2026**

2 hours

You must answer on the question paper.

You will need: The materials and apparatus listed in the confidential instructions

INSTRUCTIONS

- Answer **all** questions.
- Use a black or dark blue pen. You may use an HB pencil for any diagrams or graphs.
- Write your name, centre number and candidate number in the boxes at the top of the page.
- Write your answer to each question in the space provided.
- Do **not** use an erasable pen. Do **not** use correction fluid or tape.
- Do **not** write on any bar codes.
- You will be allowed to work with the apparatus for a maximum of 1 hour for each question.
- You should record all your observations in the spaces provided in the question paper as soon as these observations are made.
- You may use a calculator.
- You should show all your working and use appropriate units.

INFORMATION

- The total mark for this paper is 40.
- The number of marks for each question or part question is shown in brackets [ ].

For Examiner's Use	
1	
2	
Total	

This document has **12** pages. Any blank pages are indicated.

DC (PQ/CT) 356195/4
© Cambridge University Press & Assessment 2026

[Turn over

GradeMax

BLANK PAGE

DO NOT WRITE IN THIS MARGIN
DO NOT WRITE IN THIS MARGIN
DO NOT WRITE IN THIS MARGIN
DO NOT WRITE IN THIS MARGIN
DO NOT WRITE IN THIS MARGIN

© Cambridge University Press & Assessment 2026

GradeMax

You may not need to use all of the materials provided.

1 In this experiment, you will investigate a balanced metre rule.

You have been provided with a metre rule and some masses.

(a) • Place some of the masses on the rule as shown in Figure 1.1.

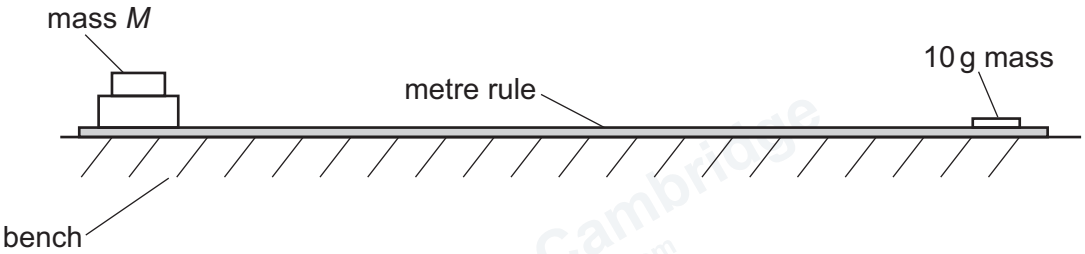

Figure 1.1

- Place one 10 g mass on the rule with its centre at the 95.0 cm mark.
  This mass must remain in place throughout the experiment.
- Place a total mass of 150 g on the rule with its centre at the 5.0 cm mark.

  The value of n is given by $n = \frac{M}{10\,\text{g}}$ where M is the mass placed at the 5.0 cm mark.

  For this value of M, the value of n is 15.
- Carefully place the rule and masses on the pivot as shown in Figure 1.2.

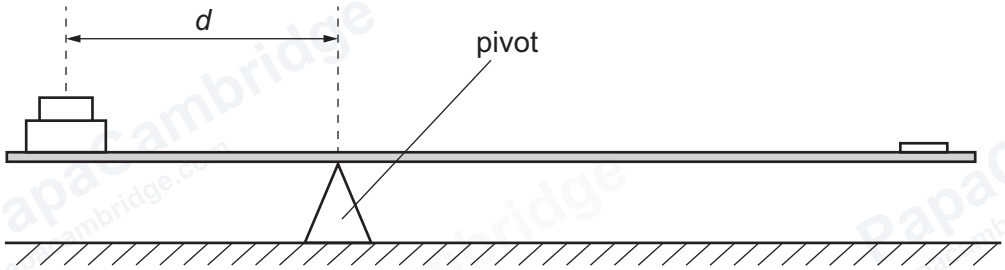

Figure 1.2

- Adjust the position of the rule on the pivot until the rule is balanced.
- The distance between the pivot and the 5.0 cm mark on the rule is d.

  Record d.

d = ... [1]

DO NOT WRITE IN THIS MARGIN
DO NOT WRITE IN THIS MARGIN
DO NOT WRITE IN THIS MARGIN
DO NOT WRITE IN THIS MARGIN
DO NOT WRITE IN THIS MARGIN

GradeMax

(b) Change M by changing the total mass at the 5.0 cm mark. Adjust the position of the pivot until the rule is balanced. Calculate n using $n = \frac{M}{10\,\text{g}}$.

Repeat until you have six sets of values of M, n and d.

Record your results in a table. Include values of $\frac{1}{d}$ in your table.

[10]

(c) **(i)** Plot a graph of $\frac{1}{d}$ on the y-axis against n on the x-axis. [3]

(ii) Draw the straight line of best fit. [1]

(iii) Determine the gradient and y-intercept of this line.

gradient = ...

y-intercept = ...

[2]

© Cambridge University Press & Assessment 2026

DO NOT WRITE IN THIS MARGIN
DO NOT WRITE IN THIS MARGIN
DO NOT WRITE IN THIS MARGIN
DO NOT WRITE IN THIS MARGIN
DO NOT WRITE IN THIS MARGIN

GradeMax

DO NOT WRITE IN THIS MARGIN
DO NOT WRITE IN THIS MARGIN
DO NOT WRITE IN THIS MARGIN
DO NOT WRITE IN THIS MARGIN
DO NOT WRITE IN THIS MARGIN

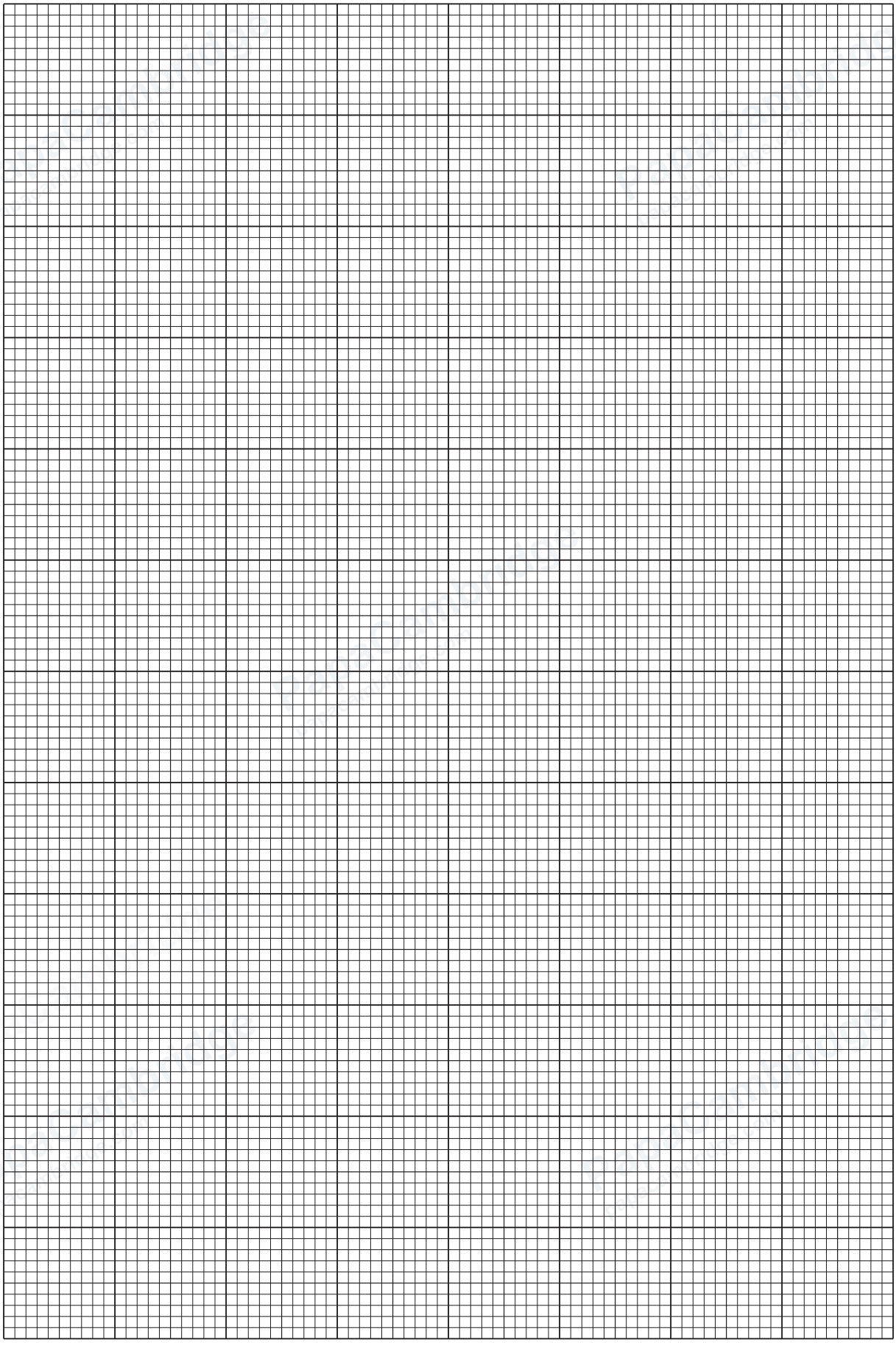

© Cambridge University Press & Assessment 2026

GradeMax

(d) It is suggested that the quantities d and n are related by the equation

$$\frac{1}{d} = Pn + Q$$

where P and Q are constants.

Using your answers in **1(c)(iii)**, determine the values of P and Q.
Give appropriate units.

P = ...

Q = ...
[2]

(e) Theory suggests that

$$\frac{Q}{P} = \frac{S + m}{m}$$

where m = 10.0 g and S is the mass of the rule.

Determine S.
Give an appropriate unit.

S = ... [1]

[Total: 20]

© Cambridge University Press & Assessment 2026

DO NOT WRITE IN THIS MARGIN
DO NOT WRITE IN THIS MARGIN
DO NOT WRITE IN THIS MARGIN
DO NOT WRITE IN THIS MARGIN
DO NOT WRITE IN THIS MARGIN

GradeMax

You may not need to use all of the materials provided.

2 In this experiment, you will investigate the resistance of a parallel combination of resistance wires.

You have been provided with two metre rules with resistance wires attached.

(a) (i) • A, B and C are crocodile clips.

Connect A to the soldered joint as shown in Figure 2.1.

• Connect B and C as shown in Figure 2.1.

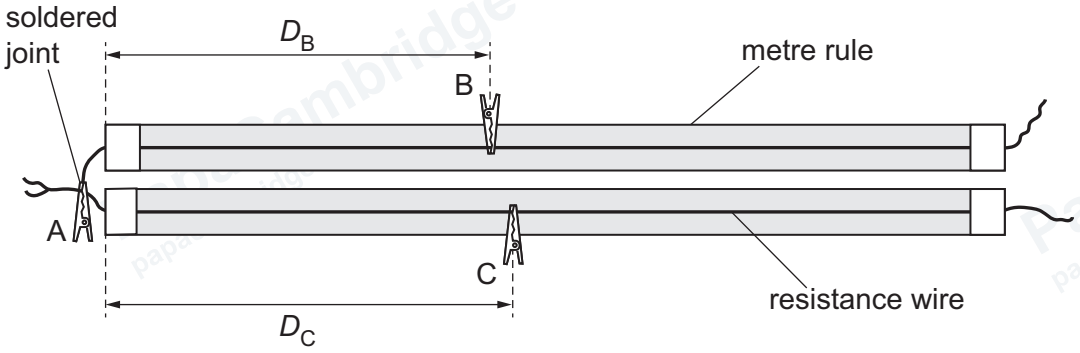

Figure 2.1

• Adjust the position of B so that the length L of wire between A and B is approximately 50 cm.

• Determine L.

L = ...

• Estimate the percentage uncertainty in your value of L. Show your working.

percentage uncertainty = ... %

[1]

(ii) • Adjust the position of C so that the length of wire between A and C is also L.

• The distance from the end of the metre rule to B is D_B.
The distance from the end of the metre rule to C is D_C, as shown in Figure 2.1.

Measure and record D_B and D_C.

D_B = ...

D_C = ...

[1]

© Cambridge University Press & Assessment 2026

DO NOT WRITE IN THIS MARGIN
DO NOT WRITE IN THIS MARGIN
DO NOT WRITE IN THIS MARGIN
DO NOT WRITE IN THIS MARGIN
DO NOT WRITE IN THIS MARGIN

GradeMax

(b) (i) • Connect the circuit as shown in Figure 2.2.

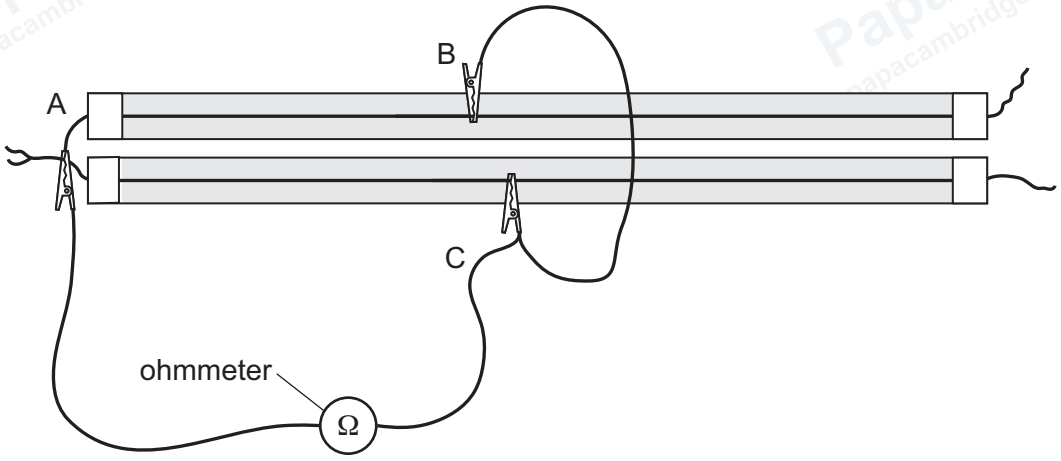

Figure 2.2

• The reading on the ohmmeter is R.

Record R.

R = ... [1]

(ii) • The value of x is 15.0 cm.

Calculate $(D_B - x)$ and $(D_C + x)$.

$(D_B - x)$ = ...

$(D_C + x)$ = ...

• Adjust the positions of B and C as shown in Figure 2.3.

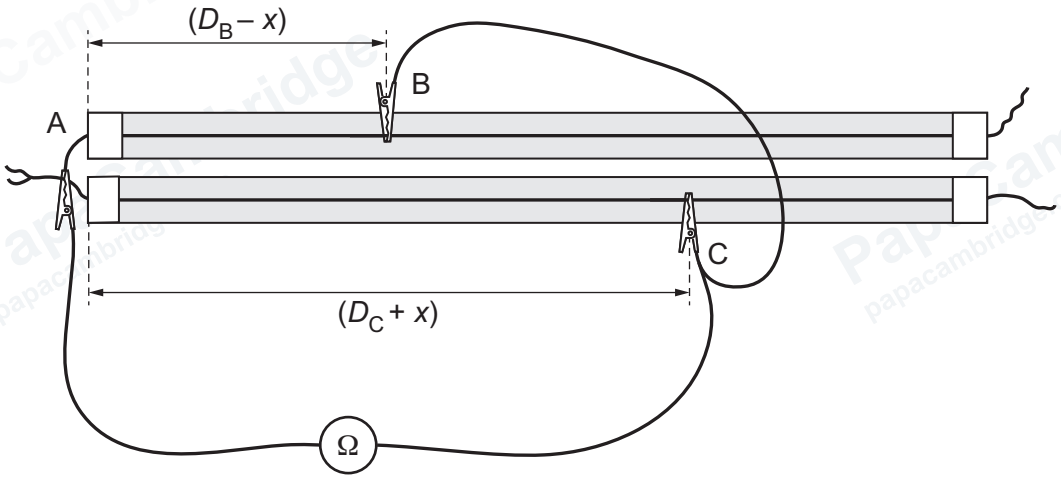

Figure 2.3

[1]

DO NOT WRITE IN THIS MARGIN
DO NOT WRITE IN THIS MARGIN
DO NOT WRITE IN THIS MARGIN
DO NOT WRITE IN THIS MARGIN
DO NOT WRITE IN THIS MARGIN

© Cambridge University Press & Assessment 2026

GradeMax

DO NOT WRITE IN THIS MARGIN
DO NOT WRITE IN THIS MARGIN
DO NOT WRITE IN THIS MARGIN
DO NOT WRITE IN THIS MARGIN
DO NOT WRITE IN THIS MARGIN

(iii) The ohmmeter reading is R_X.

Record R_X.

R_X = ... [1]

(iv) Calculate $\frac{R_X}{R}$.

$\frac{R_X}{R}$ = ... [1]

(v) Justify the number of significant figures that you have given for your value of $\frac{R_X}{R}$.

.....

.....

..... [1]

(c) Using a value of x of 25.0 cm, repeat **2(b)(ii)**, **2(b)(iii)** and **2(b)(iv)**.

$(D_B - x)$ = ...

$(D_C + x)$ = ...

R_X = ...

$\frac{R_X}{R}$ = ...
[3]

© Cambridge University Press & Assessment 2026

GradeMax

(d) It is suggested that the relationship between R_X, R and x is

$$\frac{R_X}{R} = 1 - \frac{x^2}{k}$$

where k is a constant.

Using your data, calculate **two** values of k.

first value of k = ...

second value of k = ...

[1]

(e) It is suggested that the percentage uncertainty in the values of k is 15%.

Using this uncertainty, explain whether your results support the relationship in **2(d)**.

.....

.....

.....

..... [1]

DO NOT WRITE IN THIS MARGIN
DO NOT WRITE IN THIS MARGIN
DO NOT WRITE IN THIS MARGIN
DO NOT WRITE IN THIS MARGIN
DO NOT WRITE IN THIS MARGIN

© Cambridge University Press & Assessment 2026

GradeMax

(f) **(i)** Describe **four** sources of uncertainty or limitations of the procedure for this experiment.

For any uncertainties in measurement that you describe, you should state the quantity being measured and a reason for the uncertainty.

1 .....

.....

2 .....

.....

3 .....

.....

4 .....

.....

[4]

(ii) Describe **four** improvements that could be made to this experiment. You may suggest the use of other apparatus or different procedures.

1 .....

.....

2 .....

.....

3 .....

.....

4 .....

.....

[4]

[Total: 20]

DO NOT WRITE IN THIS MARGIN
DO NOT WRITE IN THIS MARGIN
DO NOT WRITE IN THIS MARGIN
DO NOT WRITE IN THIS MARGIN
DO NOT WRITE IN THIS MARGIN

© Cambridge University Press & Assessment 2026

GradeMax

BLANK PAGE

DO NOT WRITE IN THIS MARGIN
DO NOT WRITE IN THIS MARGIN
DO NOT WRITE IN THIS MARGIN
DO NOT WRITE IN THIS MARGIN

Permission to reproduce items where third-party owned material protected by copyright is included has been sought and cleared where possible. Every reasonable effort has been made by the publisher (Cambridge University Press & Assessment) to trace copyright holders, but if any items requiring clearance have unwittingly been included, the publisher will be pleased to make amends at the earliest possible opportunity.

To avoid the issue of disclosure of answer-related information to candidates, all copyright acknowledgements are reproduced online in our Copyright Acknowledgements Booklet. This is produced for each series of examinations and is freely available to download at www.cambridgeinternational.org after the live examination series.

Cambridge International Education is the name of our awarding body and a part of Cambridge University Press & Assessment, which is a department of the University of Cambridge.

© Cambridge University Press & Assessment 2026