GradeMax

* 0000800000001 * DFD

CAMBRIDGE
International Education

Cambridge International AS & A Level

CANDIDATE NAME

CENTRE NUMBER

CANDIDATE NUMBER

4731387716

PHYSICS **9702/37**

Paper 3 Advanced Practical Skills 1 **May/June 2026**

2 hours

You must answer on the question paper.

You will need: The materials and apparatus listed in the confidential instructions

INSTRUCTIONS

- Answer **all** questions.
- Use a black or dark blue pen. You may use an HB pencil for any diagrams or graphs.
- Write your name, centre number and candidate number in the boxes at the top of the page.
- Write your answer to each question in the space provided.
- Do **not** use an erasable pen. Do **not** use correction fluid or tape.
- Do **not** write on any bar codes.
- You will be allowed to work with the apparatus for a maximum of 1 hour for each question.
- You should record all your observations in the spaces provided in the question paper as soon as these observations are made.
- You may use a calculator.
- You should show all your working and use appropriate units.

INFORMATION

- The total mark for this paper is 40.
- The number of marks for each question or part question is shown in brackets [ ].

For Examiner's Use	
1	
2	
Total	

This document has **12** pages.

DC (CJ) 368996
© Cambridge University Press & Assessment 2026

[Turn over

You may not need to use all of the materials provided.

1 In this experiment, you will investigate how the lengths of strings affect the period of oscillation of a pendulum bob.

You have been provided with two strings. The longer string is connected to a pendulum bob. The shorter string has a loop at one end.

(a) • Set up the apparatus as shown in Figure 1.1.

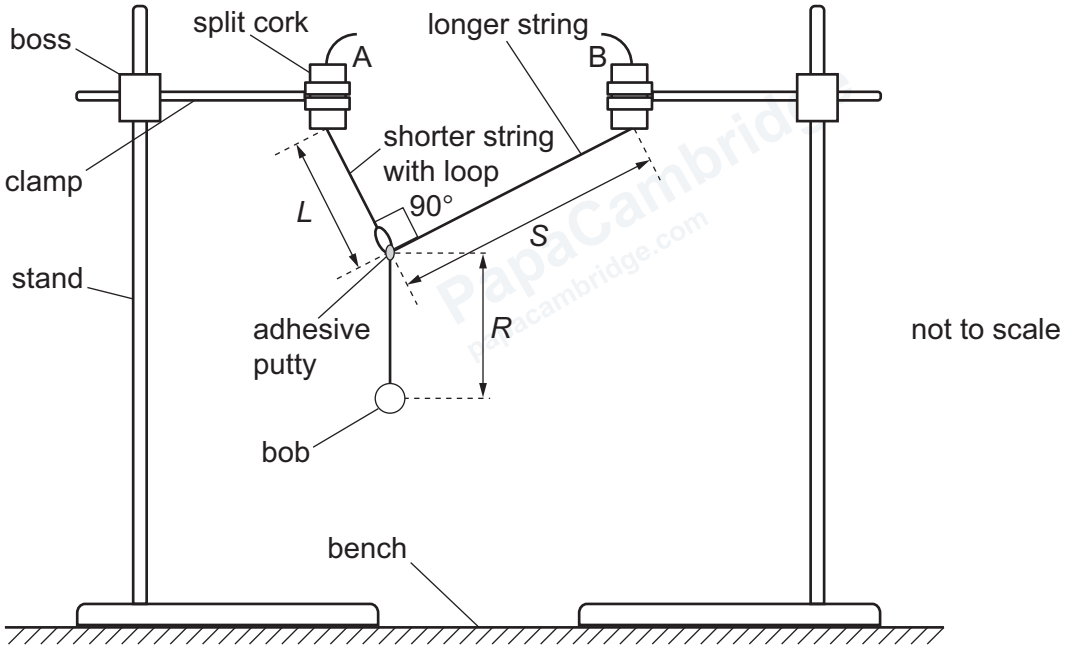

Figure 1.1

- A and B are split corks. Adjust the bosses so that A and B are at the same height above the bench.
- Clamp the shorter string in split cork A.
- The distance between the bottom of split cork A and the end of the loop is *L*.

  Adjust the position of the shorter string in split cork A so that *L* is approximately 15 cm.
- Pass the longer string through the loop.
- The distance between the end of the loop and the centre of the bob is *R*.

  Adjust the position of the loop so that *R* is equal to *L*.
- Use the adhesive putty to fix the loop at this position on the longer string.
- Clamp the longer string in split cork B.
- The distance between the end of the loop and the bottom of split cork B is *S*.

  Adjust the position of the longer string in split cork B so that *S* is equal to 2*L*.
- Move the stands so that the angle between the strings is 90°, as shown in Figure 1.1.

© Cambridge University Press & Assessment 2026

GradeMax

DO NOT WRITE IN THIS MARGIN

DO NOT WRITE IN THIS MARGIN

DO NOT WRITE IN THIS MARGIN

DO NOT WRITE IN THIS MARGIN

DO NOT WRITE IN THIS MARGIN

GradeMax

- Measure and record L and S.

L = ...

S = ...

[2]

(b) • Pull the bob towards you through a short distance.

- Release the bob. The bob will oscillate.
- Determine the period T of these oscillations.

T = ... s [2]

DO NOT WRITE IN THIS MARGIN
DO NOT WRITE IN THIS MARGIN
DO NOT WRITE IN THIS MARGIN
DO NOT WRITE IN THIS MARGIN
DO NOT WRITE IN THIS MARGIN

GradeMax

(c) Change L. Adjust the apparatus so that R is equal to L, S is equal to $2L$ and the angle between the strings is 90°. Determine T. Repeat until you have five sets of values of L and T.

Record your results in a table. Include values of T^2 in your table.

[7]

(d) (i) Plot a graph of T^2 on the y-axis against L on the x-axis. [3]

(ii) Draw the straight line of best fit. [1]

(iii) Determine the gradient and y-intercept of this line.

gradient = ...

y-intercept = ...

[2]

© Cambridge University Press & Assessment 2026

DO NOT WRITE IN THIS MARGIN
DO NOT WRITE IN THIS MARGIN
DO NOT WRITE IN THIS MARGIN
DO NOT WRITE IN THIS MARGIN
DO NOT WRITE IN THIS MARGIN

GradeMax

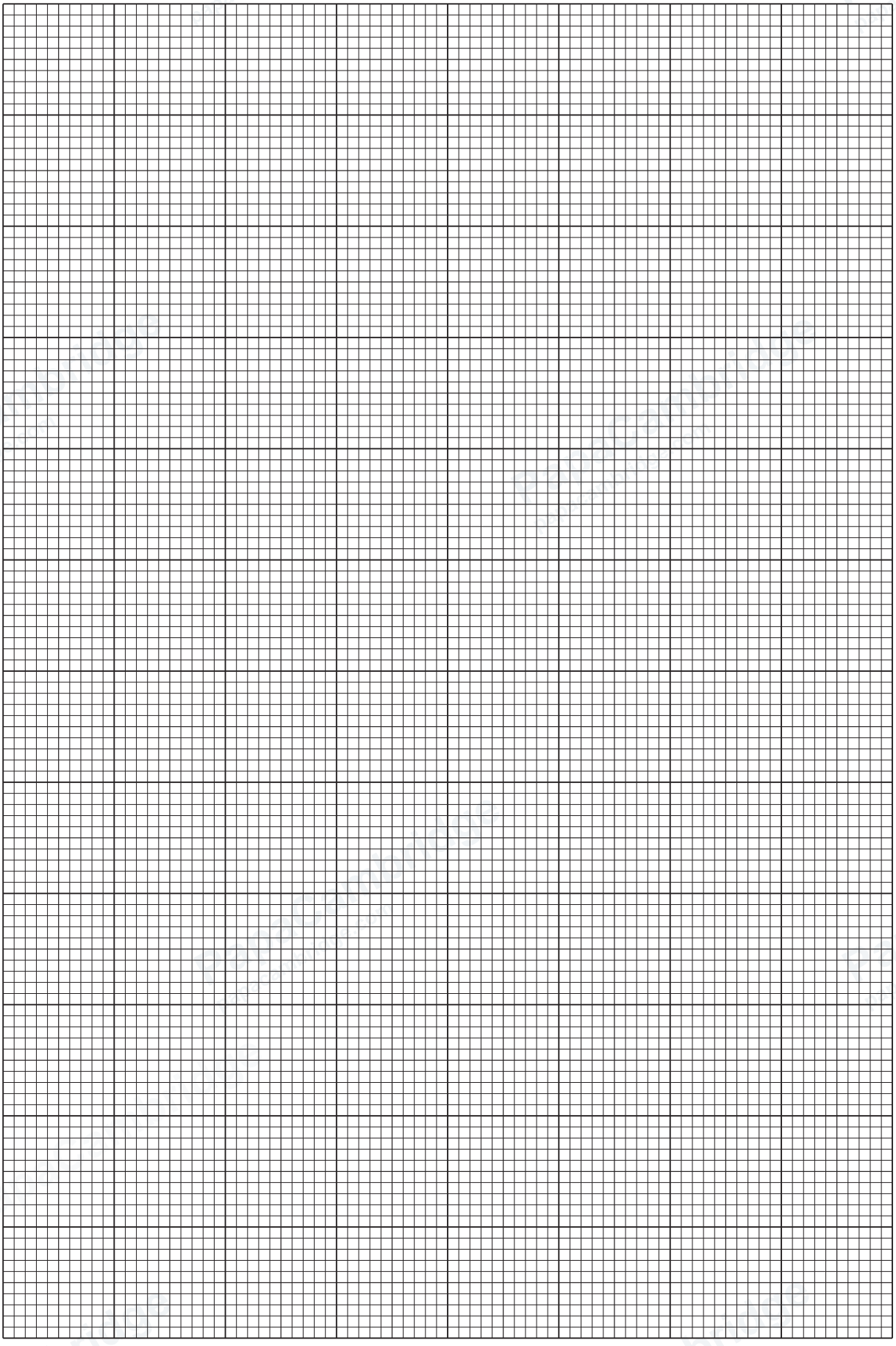

DO NOT WRITE IN THIS MARGIN
DO NOT WRITE IN THIS MARGIN
DO NOT WRITE IN THIS MARGIN
DO NOT WRITE IN THIS MARGIN
DO NOT WRITE IN THIS MARGIN

© Cambridge University Press & Assessment 2026

GradeMax

(e) It is suggested that the quantities T and L are related by the equation

$$T^2 = PL + Q$$

where P and Q are constants.

Using your answers in **1(d)(iii)**, determine the values of P and Q.
Give appropriate units.

P = ...

Q = ...
[2]

(f) Theory suggests that

$$g = \frac{4\pi^2\left(1 + \frac{2}{\sqrt{5}}\right)}{P}$$

where g is the acceleration of free fall.

Use your answer in **1(e)** to determine a value for g.
Give an appropriate unit.

g = ... [1]

[Total: 20]

DO NOT WRITE IN THIS MARGIN
DO NOT WRITE IN THIS MARGIN
DO NOT WRITE IN THIS MARGIN
DO NOT WRITE IN THIS MARGIN
DO NOT WRITE IN THIS MARGIN

© Cambridge University Press & Assessment 2026

GradeMax

You may not need to use all of the materials provided.

2 In this experiment, you will investigate the stability of a wooden block.

You have been provided with two wooden blocks labelled E and F. Each block has a square cross-section.

(a) The thickness of block E is *t* as shown in Figure 2.1.

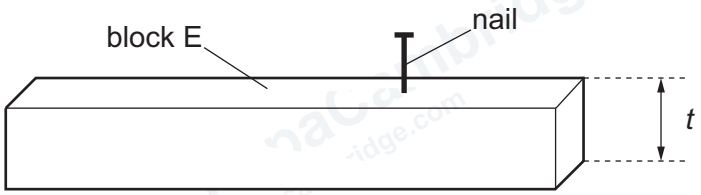

Figure 2.1

Measure and record *t*.

t = ... [1]

DO NOT WRITE IN THIS MARGIN
DO NOT WRITE IN THIS MARGIN
DO NOT WRITE IN THIS MARGIN
DO NOT WRITE IN THIS MARGIN
DO NOT WRITE IN THIS MARGIN

© Cambridge University Press & Assessment 2026

GradeMax

(b) • Place E on the bench as shown in Figure 2.2.

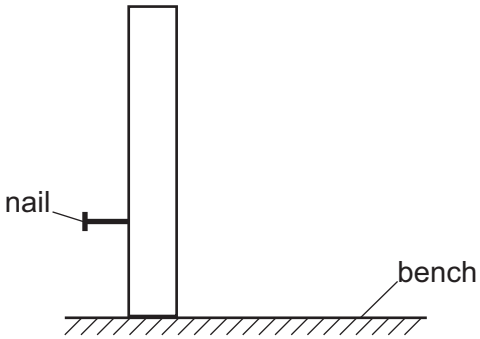

Figure 2.2

• Gently push the block until it overbalances as shown in Figure 2.3.

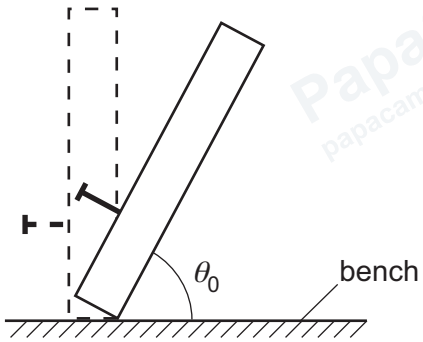

Figure 2.3

• The angle between the edge of the block and the bench at the point the block just overbalances is θ_0.

Measure and record θ_0.

θ_0 = ...° [2]

DO NOT WRITE IN THIS MARGIN
DO NOT WRITE IN THIS MARGIN
DO NOT WRITE IN THIS MARGIN
DO NOT WRITE IN THIS MARGIN
DO NOT WRITE IN THIS MARGIN

© Cambridge University Press & Assessment 2026

GradeMax

(c) (i) • Place E on the bench. Hang a mass m of 50 g on the nail as shown in Figure 2.4.

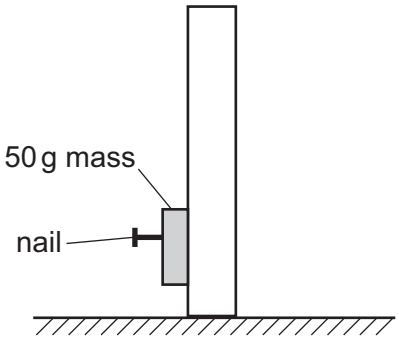

Figure 2.4

• Record m.

m = ... g

• Gently push the block until it overbalances as shown in Figure 2.5.

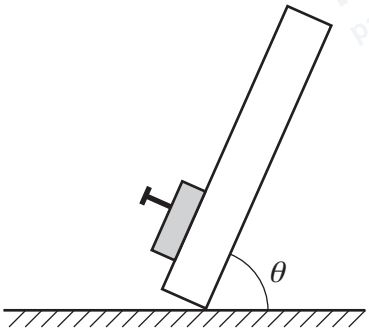

Figure 2.5

• The angle between the edge of the block and the bench at the point the block just overbalances is θ.

Measure and record θ.

θ = ... °
[1]

(ii) Estimate the percentage uncertainty in this value of θ. Show your working.

percentage uncertainty = ... % [1]

DO NOT WRITE IN THIS MARGIN

© Cambridge University Press & Assessment 2026

(iii) Calculate $\frac{\tan\theta}{\tan\theta_0}$.

$\frac{\tan\theta}{\tan\theta_0}$ = ... [1]

(iv) Justify the number of significant figures that you have given for your value of $\frac{\tan\theta}{\tan\theta_0}$.

.....

.....

..... [1]

(d) Using block F and a mass m of 100 g, repeat **2(a)**, **2(b)**, **2(c)(i)** and **2(c)(iii)**.

t = ...

θ_0 = ... °

m = ... g

θ = ... °

$\frac{\tan\theta}{\tan\theta_0}$ = ...
[3]

DO NOT WRITE IN THIS MARGIN
DO NOT WRITE IN THIS MARGIN
DO NOT WRITE IN THIS MARGIN
DO NOT WRITE IN THIS MARGIN
DO NOT WRITE IN THIS MARGIN

© Cambridge University Press & Assessment 2026

GradeMax

(e) It is suggested that the relationship between θ, θ_0, t and m is

$$\frac{\tan\theta}{\tan\theta_0} = \frac{kt}{\sqrt{m}}$$

where k is a constant.

Using your data, calculate **two** values of k.

first value of k = ...

second value of k = ...

[1]

(f) It is suggested that the percentage uncertainty in the values of k is 15%.

Using this uncertainty, explain whether your results support the relationship in **2(e)**.

.....

.....

.....

..... [1]

DO NOT WRITE IN THIS MARGIN
DO NOT WRITE IN THIS MARGIN
DO NOT WRITE IN THIS MARGIN
DO NOT WRITE IN THIS MARGIN
DO NOT WRITE IN THIS MARGIN

© Cambridge University Press & Assessment 2026

GradeMax

(g) (i) Describe **four** sources of uncertainty or limitations of the procedure for this experiment.

For any uncertainties in measurement that you describe, you should state the quantity being measured and a reason for the uncertainty.

1 .....

.....

2 .....

.....

3 .....

.....

4 .....

.....

[4]

(ii) Describe **four** improvements that could be made to this experiment. You may suggest the use of other apparatus or different procedures.

1 .....

.....

2 .....

.....

3 .....

.....

4 .....

.....

[4]

[Total: 20]

Permission to reproduce items where third-party owned material protected by copyright is included has been sought and cleared where possible. Every reasonable effort has been made by the publisher (Cambridge University Press & Assessment) to trace copyright holders, but if any items requiring clearance have unwittingly been included, the publisher will be pleased to make amends at the earliest possible opportunity.

To avoid the issue of disclosure of answer-related information to candidates, all copyright acknowledgements are reproduced online in our Copyright Acknowledgements Booklet. This is produced for each series of examinations and is freely available to download at www.cambridgeinternational.org after the live examination series.

Cambridge International Education is the name of our awarding body and a part of Cambridge University Press & Assessment, which is a department of the University of Cambridge.

© Cambridge University Press & Assessment 2026

DO NOT WRITE IN THIS MARGIN DO NOT WRITE IN THIS MARGIN DO NOT WRITE IN THIS MARGIN DO NOT WRITE IN THIS MARGIN DO NOT WRITE IN THIS MARGIN