GradeMax

* 0000800000001 * DFD

CAMBRIDGE
International Education

Cambridge International AS & A Level

CANDIDATE NAME

CENTRE NUMBER

CANDIDATE NUMBER

* 5 8 4 3 9 6 4 5 2 4 *

PHYSICS **9702/41**

Paper 4 A Level Structured Questions **May/June 2026**

2 hours

You must answer on the question paper.

No additional materials are needed.

INSTRUCTIONS

- Answer **all** questions.
- Use a black or dark blue pen. You may use an HB pencil for any diagrams or graphs.
- Write your name, centre number and candidate number in the boxes at the top of the page.
- Write your answer to each question in the space provided.
- Do **not** use an erasable pen. Do **not** use correction fluid or tape.
- Do **not** write on any bar codes.
- You may use a calculator.
- You should show all your working and use appropriate units.

INFORMATION

- The total mark for this paper is 100.
- The number of marks for each question or part question is shown in brackets [ ].

This document has **24** pages. Any blank pages are indicated.

DC (EV/SW) 356123/4
© Cambridge University Press & Assessment 2026

[Turn over

GradeMax

Data

acceleration of free fall	$g = 9.81\ \text{m s}^{-2}$
speed of light in free space	$c = 3.00 \times 10^{8}\ \text{m s}^{-1}$
elementary charge	$e = 1.60 \times 10^{-19}\ \text{C}$
unified atomic mass unit	$1\ \text{u} = 1.66 \times 10^{-27}\ \text{kg}$
rest mass of proton	$m_\text{p} = 1.67 \times 10^{-27}\ \text{kg}$
rest mass of electron	$m_\text{e} = 9.11 \times 10^{-31}\ \text{kg}$
Avogadro constant	$N_\text{A} = 6.02 \times 10^{23}\ \text{mol}^{-1}$
molar gas constant	$R = 8.31\ \text{J K}^{-1}\ \text{mol}^{-1}$
Boltzmann constant	$k = 1.38 \times 10^{-23}\ \text{J K}^{-1}$
gravitational constant	$G = 6.67 \times 10^{-11}\ \text{N m}^2\ \text{kg}^{-2}$
permittivity of free space	$\varepsilon_0 = 8.85 \times 10^{-12}\ \text{F m}^{-1}$ $\left(\frac{1}{4\pi\varepsilon_0} = 8.99 \times 10^{9}\ \text{m F}^{-1}\right)$
Planck constant	$h = 6.63 \times 10^{-34}\ \text{J s}$
Stefan–Boltzmann constant	$\sigma = 5.67 \times 10^{-8}\ \text{W m}^{-2}\ \text{K}^{-4}$

Formulae

uniformly accelerated motion	$s = ut + \frac{1}{2}at^2$ $v^2 = u^2 + 2as$
hydrostatic pressure	$\Delta p = \rho g \Delta h$
upthrust	$F = \rho g V$
Doppler effect for sound waves	$f_\text{o} = \frac{f_\text{s} v}{v \pm v_\text{s}}$
electric current	$I = Anvq$
resistors in series	$R = R_1 + R_2 + \ldots$
resistors in parallel	$\frac{1}{R} = \frac{1}{R_1} + \frac{1}{R_2} + \ldots$

DO NOT WRITE IN THIS MARGIN
DO NOT WRITE IN THIS MARGIN
DO NOT WRITE IN THIS MARGIN
DO NOT WRITE IN THIS MARGIN
DO NOT WRITE IN THIS MARGIN

© Cambridge University Press & Assessment 2026

GradeMax

DO NOT WRITE IN THIS MARGIN
DO NOT WRITE IN THIS MARGIN
DO NOT WRITE IN THIS MARGIN
DO NOT WRITE IN THIS MARGIN
DO NOT WRITE IN THIS MARGIN

gravitational potential	$\phi = -\frac{GM}{r}$
gravitational potential energy	$E_P = -\frac{GMm}{r}$
pressure of an ideal gas	$p = \frac{1}{3}\frac{Nm}{V}\langle c^2 \rangle$
simple harmonic motion	$a = -\omega^2 x$
velocity of particle in s.h.m.	$v = v_0 \cos \omega t$ $v = \pm \omega \sqrt{(x_0^2 - x^2)}$
electric potential	$V = \frac{Q}{4\pi\varepsilon_0 r}$
electrical potential energy	$E_P = \frac{Qq}{4\pi\varepsilon_0 r}$
capacitors in series	$\frac{1}{C} = \frac{1}{C_1} + \frac{1}{C_2} + ...$
capacitors in parallel	$C = C_1 + C_2 + ...$
discharge of a capacitor	$x = x_0 e^{-\frac{t}{RC}}$
Hall voltage	$V_H = \frac{BI}{ntq}$
alternating current/voltage	$x = x_0 \sin \omega t$
radioactive decay	$x = x_0 e^{-\lambda t}$
decay constant	$\lambda = \frac{0.693}{t_{\frac{1}{2}}}$
intensity reflection coefficient	$\frac{I_R}{I_0} = \frac{(Z_1 - Z_2)^2}{(Z_1 + Z_2)^2}$
Stefan–Boltzmann law	$L = 4\pi\sigma r^2 T^4$
Doppler redshift	$\frac{\Delta\lambda}{\lambda} \approx \frac{\Delta f}{f} \approx \frac{v}{c}$

© Cambridge University Press & Assessment 2026

GradeMax

1 **(a)** Define gravitational potential at a point.

.....

.....

..... [2]

(b) A uniform spherical planet has radius R. The gravitational potential at its surface is $-\Phi$.

P is a point on a line that passes through the centre of the planet, at variable displacement x from the centre, as shown in Figure 1.1.

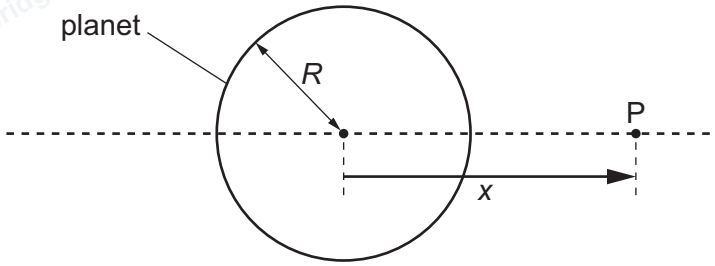

Figure 1.1

Figure 1.2 shows the variation with x of the gravitational potential ϕ due to the planet in the region outside the planet close to its surface.

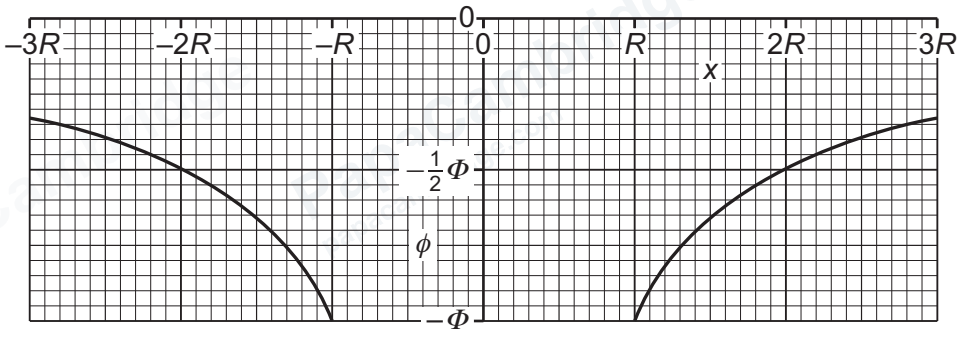

Figure 1.2

(i) Explain why ϕ is negative for all values of x.

.....

.....

..... [2]

© Cambridge University Press & Assessment 2026

DO NOT WRITE IN THIS MARGIN
DO NOT WRITE IN THIS MARGIN
DO NOT WRITE IN THIS MARGIN
DO NOT WRITE IN THIS MARGIN
DO NOT WRITE IN THIS MARGIN

(ii) State an expression, in terms of Φ and R, for the mass M of the planet. Identify any other symbols that you use.

$M =$ ..... [2]

(iii) Determine an expression, in terms of Φ and R, for the gravitational field strength g_0 at the surface of the planet.

$g_0 =$ ..... [1]

(iv) On Figure 1.3, sketch the variation of the gravitational field g with x between $x = -3R$ and $x = 3R$. Do **not** include the region inside the sphere between $x = -R$ and $x = R$.

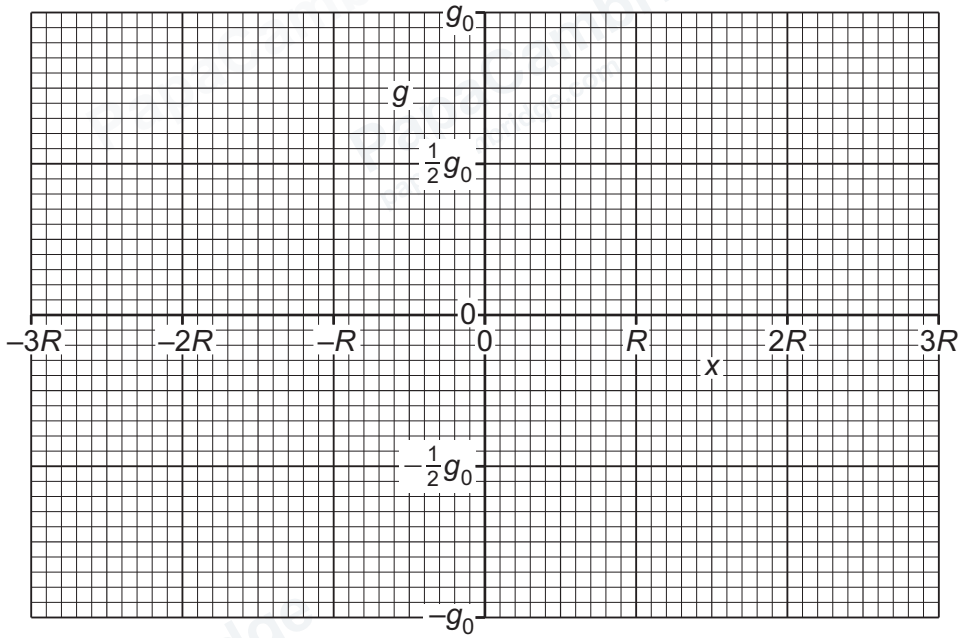

Figure 1.3

[3]

[Total: 10]

DO NOT WRITE IN THIS MARGIN
DO NOT WRITE IN THIS MARGIN
DO NOT WRITE IN THIS MARGIN
DO NOT WRITE IN THIS MARGIN
DO NOT WRITE IN THIS MARGIN
PapaCambridge
papacambridge.com

GradeMax

2 **(a)** State what is meant by an ideal gas.

.....

.....

..... [2]

(b) Ideal gases may be used to measure the temperature of the environment in a laboratory experiment. In some situations, however, it is preferable to use a thermocouple thermometer.

(i) Explain how a thermometer that uses an ideal gas can be advantageous compared with a thermometer that uses a liquid in glass.

.....

.....

..... [1]

(ii) Describe a laboratory situation in which a thermocouple thermometer is preferable to a thermometer that uses an ideal gas.

.....

.....

..... [1]

(c) A very small sample of an ideal gas consists of five molecules, each of mass 3.34×10^{-27} kg. At a particular instant, the speeds of the molecules are as shown in Figure 2.1.

$357\,m\,s^{-1}$	$424\,m\,s^{-1}$	$509\,m\,s^{-1}$	$286\,m\,s^{-1}$	$435\,m\,s^{-1}$

Figure 2.1

Determine, to three significant figures, the root-mean-square (r.m.s.) speed c_0 of the molecules.

c_0 = ... $m\,s^{-1}$ [2]

© Cambridge University Press & Assessment 2026

DO NOT WRITE IN THIS MARGIN
DO NOT WRITE IN THIS MARGIN
DO NOT WRITE IN THIS MARGIN
DO NOT WRITE IN THIS MARGIN
DO NOT WRITE IN THIS MARGIN

GradeMax

(d) A larger sample of the gas in **2(c)** consists of 5.0×10^{23} molecules. These molecules have the same r.m.s. speed as the molecules of the gas in **2(c)**.

(i) Calculate the amount of gas.

amount of gas = ... mol [2]

(ii) Determine the thermodynamic temperature T_0 of the gas.

T_0 = ... K [2]

(iii) The temperature of the gas is now gradually increased.

On Figure 2.2, sketch the variation of the r.m.s. speed of the molecules of the gas with thermodynamic temperature.

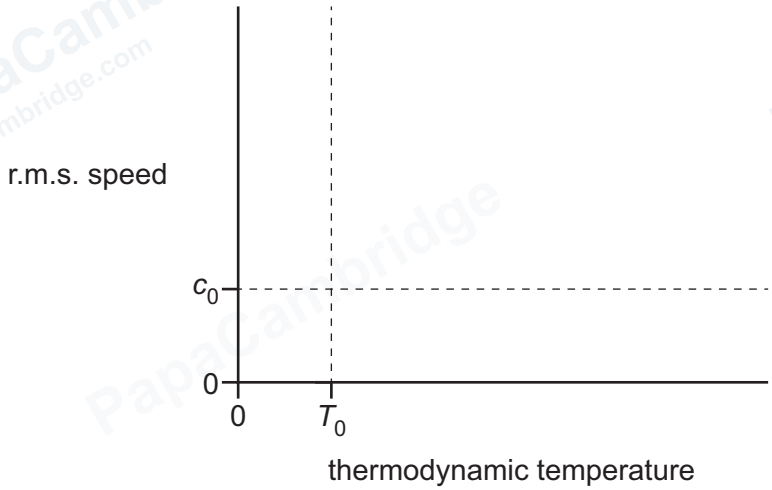

Figure 2.2

[3]

[Total: 13]

DO NOT WRITE IN THIS MARGIN
DO NOT WRITE IN THIS MARGIN
DO NOT WRITE IN THIS MARGIN
DO NOT WRITE IN THIS MARGIN
DO NOT WRITE IN THIS MARGIN

GradeMax

3 **(a)** State what is meant by the internal energy of a system.

.....

.....

..... [2]

(b) An ideal gas containing 8.7×10^{23} molecules is at a temperature of 300 K and a pressure of 2.0×10^5 Pa.

(i) Show that the volume of the gas is 0.018 m^3.

[2]

(ii) Determine the internal energy of the gas. Explain your reasoning.

internal energy = ... J [3]

DO NOT WRITE IN THIS MARGIN
DO NOT WRITE IN THIS MARGIN
DO NOT WRITE IN THIS MARGIN
DO NOT WRITE IN THIS MARGIN
DO NOT WRITE IN THIS MARGIN

© Cambridge University Press & Assessment 2026

GradeMax

(c) The gas in **3(b)** undergoes a sequence of changes AB, BC and CA in its pressure p and volume V, as shown in Figure 3.1.

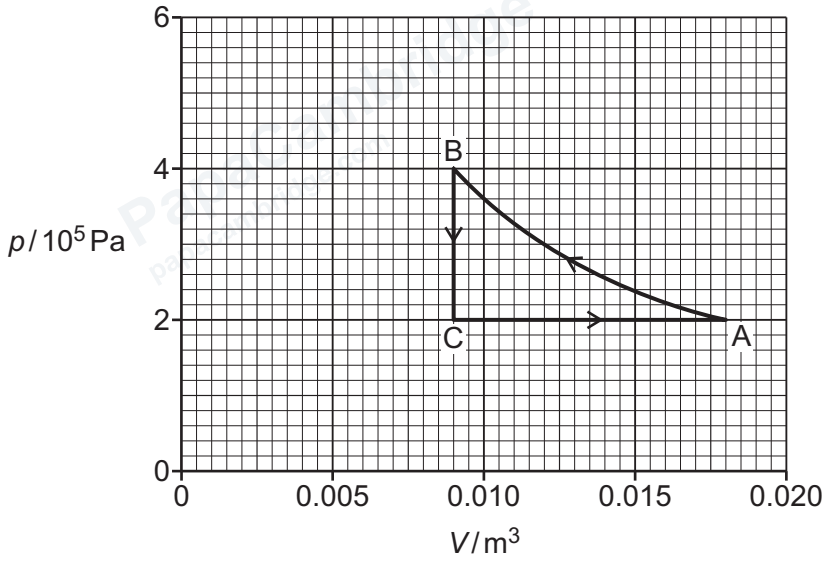

Figure 3.1

Determine **three** conclusions that can be drawn from Figure 3.1 about the individual and overall effects of these changes on the energy of the gas. The conclusions may be qualitative or quantitative, and may refer to any of work done, transfer of thermal energy and change in internal energy. Use the space for any working.

1 .....

.....

2 .....

.....

3 .....

.....

[3]

[Total: 10]

© Cambridge University Press & Assessment 2026 **[Turn over**

DO NOT WRITE IN THIS MARGIN
DO NOT WRITE IN THIS MARGIN
DO NOT WRITE IN THIS MARGIN
DO NOT WRITE IN THIS MARGIN
DO NOT WRITE IN THIS MARGIN

GradeMax

4 A hydrogen atom consists of a proton and an electron separated by distance 2*x*, as shown in Figure 4.1.

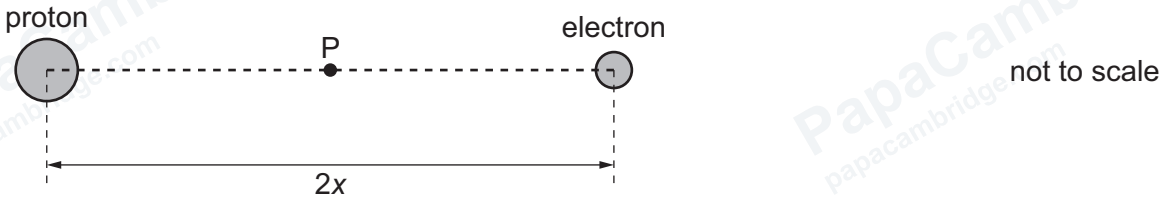

Figure 4.1

Point P is at the midpoint of the line joining the centres of the proton and the electron.

(a) (i) For point P, compare the electric field due to the proton with the electric field due to the electron.

.....

.....

.....

.....

..... [3]

(ii) For point P, compare the electric potential due to the proton with the electric potential due to the electron.

.....

.....

.....

.....

..... [3]

(b) (i) The elementary charge is *e* and the permittivity of free space is ε_0.

State an expression, in terms of *x*, *e* and ε_0, for the magnitude of the electric force *F* between the proton and the electron.

F = ... [2]

© Cambridge University Press & Assessment 2026

DO NOT WRITE IN THIS MARGIN
DO NOT WRITE IN THIS MARGIN
DO NOT WRITE IN THIS MARGIN
DO NOT WRITE IN THIS MARGIN
DO NOT WRITE IN THIS MARGIN

GradeMax

(ii) Determine an expression, in terms of F and x, for the electric potential energy E_P of the proton and the electron.

E_P = ... [1]

[Total: 9]

DO NOT WRITE IN THIS MARGIN
DO NOT WRITE IN THIS MARGIN
DO NOT WRITE IN THIS MARGIN
DO NOT WRITE IN THIS MARGIN
DO NOT WRITE IN THIS MARGIN

PapaCambridge papacambridge.com

GradeMax

5 **(a)** Define the capacitance of a parallel plate capacitor.

.....

.....

..... [2]

(b) Two capacitors X and Y have capacitances C_X and C_Y respectively. The capacitors are connected in parallel to a supply that has electromotive force (e.m.f.) E, as shown in Figure 5.1.

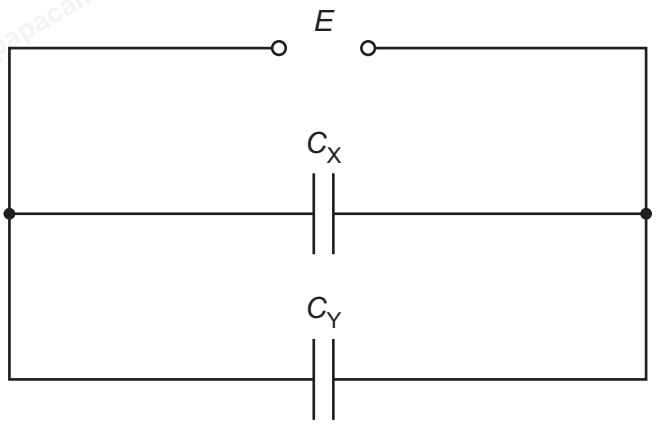

Figure 5.1

Derive the expression for the relationship between C_X, C_Y and the combined capacitance C_T of the circuit.

[3]

DO NOT WRITE IN THIS MARGIN
DO NOT WRITE IN THIS MARGIN
DO NOT WRITE IN THIS MARGIN
DO NOT WRITE IN THIS MARGIN
DO NOT WRITE IN THIS MARGIN

© Cambridge University Press & Assessment 2026

GradeMax

(c) Two capacitors are connected in **series** to a supply that has e.m.f. 6.00 V.

One of the capacitors has capacitance C and the other has capacitance $2C$.

The total energy stored by the two capacitors is 1.30 mJ.

Calculate C in μF.

C = ... μF [3]

[Total: 8]

DO NOT WRITE IN THIS MARGIN
DO NOT WRITE IN THIS MARGIN
DO NOT WRITE IN THIS MARGIN
DO NOT WRITE IN THIS MARGIN
DO NOT WRITE IN THIS MARGIN

PapaCambridge papacambridge.com

6 **(a)** Define magnetic flux density.

.....

.....

..... [2]

(b) Figure 6.1 shows a beam of charged particles in a device known as a mass spectrometer.

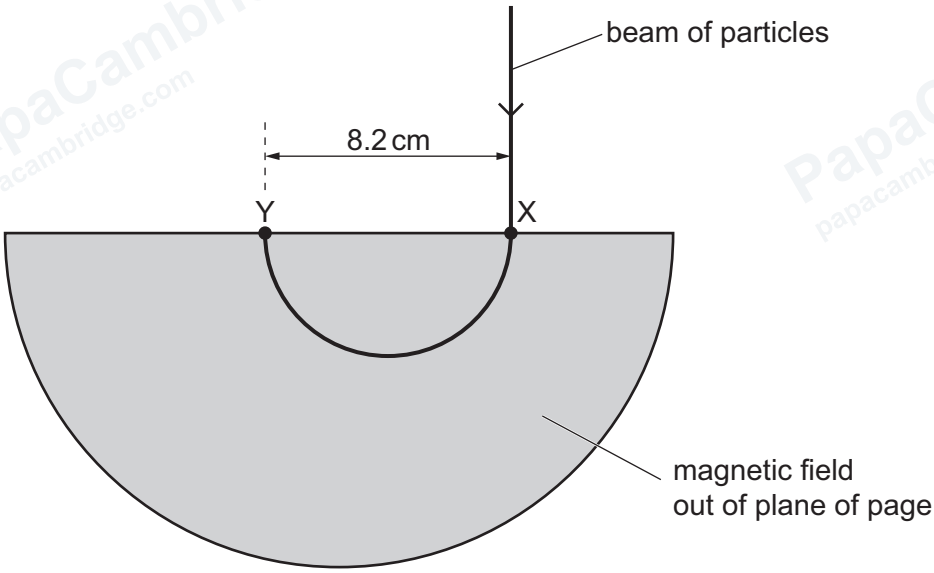

Figure 6.1

The shaded region contains a uniform magnetic field that is out of the plane of the page.

The particles enter the region of the magnetic field at point X and strike a detector at point Y.

(i) Explain whether the sign of the charge on the particles is positive or negative.

.....

.....

.....

..... [2]

DO NOT WRITE IN THIS MARGIN

GradeMax

DO NOT WRITE IN THIS MARGIN
DO NOT WRITE IN THIS MARGIN
DO NOT WRITE IN THIS MARGIN
DO NOT WRITE IN THIS MARGIN
DO NOT WRITE IN THIS MARGIN

(ii) Explain why the path followed by the beam of particles inside the magnetic field is circular.

.....

.....

..... [2]

(c) Each of the particles in **6(b)** has a mass of 2.0×10^{-26} kg and a charge of magnitude 3.2×10^{-19} C. All of the particles have a speed of $7.3 \times 10^{4}\,\text{m s}^{-1}$.

The distance XY is 8.2 cm.

(i) Show that the centripetal acceleration of one of the particles is $1.3 \times 10^{11}\,\text{m s}^{-2}$.

[2]

(ii) Use the information in **6(c)(i)** to determine the flux density B of the uniform magnetic field. Give a unit with your answer.

B = ... unit ..... [2]

(d) The particles in **6(b)** are replaced with particles that have half of the charge and a quarter of the mass of the particles in **6(b)**. The sign of the charge and the speed of the particles are both unchanged.

On Figure 6.1, draw the path of this beam of particles. [2]

[Total: 12]

© Cambridge University Press & Assessment 2026

GradeMax

7 (a) (i) State what is meant by half-wave rectification of an alternating current.

.....

.....

..... [2]

(ii) Figure 7.1 shows an incomplete diagram of the circuit used to achieve half-wave rectification of an alternating input voltage V_{IN} to produce output voltage V_{OUT}.

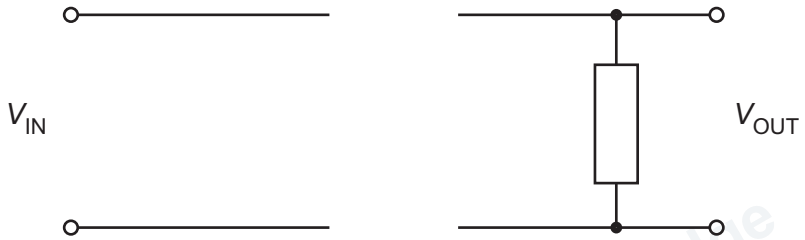

Figure 7.1

Complete the circuit diagram in Figure 7.1. [2]

DO NOT WRITE IN THIS MARGIN
DO NOT WRITE IN THIS MARGIN
DO NOT WRITE IN THIS MARGIN
DO NOT WRITE IN THIS MARGIN
DO NOT WRITE IN THIS MARGIN

© Cambridge University Press & Assessment 2026

GradeMax

(b) Two alternating voltages V_1 and V_2 have the same peak voltage V_0 and the same period T. One is sinusoidal and the other is a square wave, as shown by the variations with time t in Figure 7.2 and Figure 7.3.

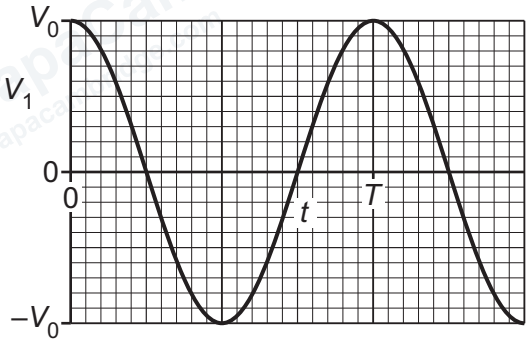

Figure 7.2

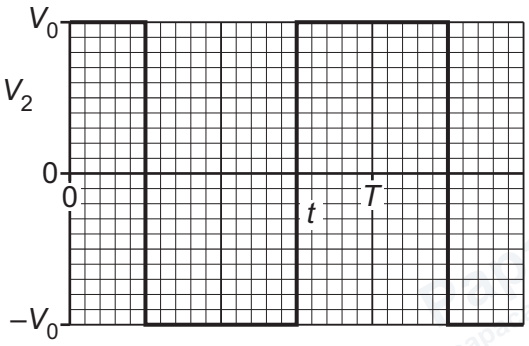

Figure 7.3

The alternating voltages are applied in turn to the input terminals in the completed circuit of Figure 7.1.

Complete Table 7.1 to show, in terms of V_0, expressions for the root-mean-square (r.m.s.) values of the two unrectified and the two half-wave rectified voltages.

Table 7.1

	r.m.s. value	
	V_1	V_2
unrectified		
half-wave rectified		

[4]

[Total: 8]

© Cambridge University Press & Assessment 2026

DO NOT WRITE IN THIS MARGIN
DO NOT WRITE IN THIS MARGIN
DO NOT WRITE IN THIS MARGIN
DO NOT WRITE IN THIS MARGIN
DO NOT WRITE IN THIS MARGIN

GradeMax

8 **(a)** State what is meant by a photon.

.....

.....

..... [2]

(b) X-rays for use in medical diagnosis are produced by accelerating charged particles towards a metal target.

(i) State the name of the charged particles.

..... [1]

(ii) Describe how X-rays are formed at the target.

.....

.....

..... [2]

(iii) For any given accelerating voltage, there is a range of wavelengths of X-rays produced that has a minimum value.

Explain, with reference to photons, why there is a range of wavelengths and why this range has a minimum value.

.....

.....

.....

.....

..... [3]

(iv) Calculate the minimum wavelength of X-rays produced when the accelerating voltage is 52.0 kV.

minimum wavelength = ... m [3]

DO NOT WRITE IN THIS MARGIN
DO NOT WRITE IN THIS MARGIN
DO NOT WRITE IN THIS MARGIN
DO NOT WRITE IN THIS MARGIN
DO NOT WRITE IN THIS MARGIN

© Cambridge University Press & Assessment 2026

GradeMax

(c) X-rays are used to create an image of the internal structure of an object that is made from two types of material of similar thickness.

Describe and explain how a property of the materials determines whether or not the image produced has good contrast.

.....

.....

.....

..... [2]

[Total: 13]

DO NOT WRITE IN THIS MARGIN
DO NOT WRITE IN THIS MARGIN
DO NOT WRITE IN THIS MARGIN
DO NOT WRITE IN THIS MARGIN
DO NOT WRITE IN THIS MARGIN

GradeMax

9 **(a)** Define the mass defect of a nucleus.

.....

.....

..... [2]

(b) Thorium-228 ($^{228}_{90}$Th) is radioactive.

Table 9.1 shows the mass defects of thorium-228 and some other nuclides.

Table 9.1

nuclide	mass defect / u
$^{4}_{2}$He	0.030 377
$^{224}_{88}$Ra	1.846 840
$^{228}_{89}$Ac	1.869 820
$^{228}_{90}$Th	1.871 290
$^{228}_{91}$Pa	1.866 129

(i) Use the data in Table 9.1 to explain why thorium-228 is an α-emitter and **not** a β^- emitter or a β^+ emitter.

.....

.....

..... [4]

DO NOT WRITE IN THIS MARGIN
DO NOT WRITE IN THIS MARGIN
DO NOT WRITE IN THIS MARGIN
DO NOT WRITE IN THIS MARGIN
DO NOT WRITE IN THIS MARGIN

© Cambridge University Press & Assessment 2026

GradeMax

(ii) Calculate the energy, in MeV, released by the α-decay of one thorium-228 nucleus. Give your answer to three significant figures.

energy = ... MeV [3]

[Total: 9]

DO NOT WRITE IN THIS MARGIN
DO NOT WRITE IN THIS MARGIN
DO NOT WRITE IN THIS MARGIN
DO NOT WRITE IN THIS MARGIN
DO NOT WRITE IN THIS MARGIN

GradeMax

10 **(a)** State Wien's displacement law.

.....

.....

..... [2]

(b) The Sun has a radius of 6.96×10^8 m and a surface temperature of 5770 K.

The Earth is at a distance of 1.52×10^{11} m from the Sun.

(i) Calculate the luminosity of the Sun.

luminosity = ... W [2]

(ii) Determine the radiant flux intensity at the Earth of radiation emitted by the Sun. Give a unit with your answer.

radiant flux intensity = ... unit ..... [3]

DO NOT WRITE IN THIS MARGIN
DO NOT WRITE IN THIS MARGIN
DO NOT WRITE IN THIS MARGIN
DO NOT WRITE IN THIS MARGIN
DO NOT WRITE IN THIS MARGIN

© Cambridge University Press & Assessment 2026

GradeMax

(iii) Star X has a wavelength of maximum emission of $0.581\lambda_s$, where λ_s is the wavelength of maximum emission from the Sun.

Calculate the surface temperature of star X.

surface temperature = ... K [1]

[Total: 8]

DO NOT WRITE IN THIS MARGIN
DO NOT WRITE IN THIS MARGIN
DO NOT WRITE IN THIS MARGIN
DO NOT WRITE IN THIS MARGIN
DO NOT WRITE IN THIS MARGIN

© Cambridge University Press & Assessment 2026

GradeMax

BLANK PAGE

DO NOT WRITE IN THIS MARGIN
DO NOT WRITE IN THIS MARGIN
DO NOT WRITE IN THIS MARGIN
DO NOT WRITE IN THIS MARGIN
DO NOT WRITE IN THIS MARGIN

Permission to reproduce items where third-party owned material protected by copyright is included has been sought and cleared where possible. Every reasonable effort has been made by the publisher (Cambridge University Press & Assessment) to trace copyright holders, but if any items requiring clearance have unwittingly been included, the publisher will be pleased to make amends at the earliest possible opportunity.

To avoid the issue of disclosure of answer-related information to candidates, all copyright acknowledgements are reproduced online in our Copyright Acknowledgements Booklet. This is produced for each series of examinations and is freely available to download at www.cambridgeinternational.org after the live examination series.

Cambridge International Education is the name of our awarding body and a part of Cambridge University Press & Assessment, which is a department of the University of Cambridge.

© Cambridge University Press & Assessment 2026