GradeMax

* 0000800000001 * DFD

CAMBRIDGE
International Education

Cambridge International AS & A Level

CANDIDATE NAME

CENTRE NUMBER

CANDIDATE NUMBER

* 3 1 0 6 0 1 4 7 9 9 *

PHYSICS **9702/42**

Paper 4 A Level Structured Questions **May/June 2026**

2 hours

You must answer on the question paper.

No additional materials are needed.

INSTRUCTIONS

- Answer **all** questions.
- Use a black or dark blue pen. You may use an HB pencil for any diagrams or graphs.
- Write your name, centre number and candidate number in the boxes at the top of the page.
- Write your answer to each question in the space provided.
- Do **not** use an erasable pen. Do **not** use correction fluid or tape.
- Do **not** write on any bar codes.
- You may use a calculator.
- You should show all your working and use appropriate units.

INFORMATION

- The total mark for this paper is 100.
- The number of marks for each question or part question is shown in brackets [ ].

This document has **24** pages. Any blank pages are indicated.

DC (SL/SW) 356124/3
© Cambridge University Press & Assessment 2026

[Turn over

GradeMax

Data

acceleration of free fall	$g = 9.81\ \text{m s}^{-2}$
speed of light in free space	$c = 3.00 \times 10^{8}\ \text{m s}^{-1}$
elementary charge	$e = 1.60 \times 10^{-19}\ \text{C}$
unified atomic mass unit	$1\ \text{u} = 1.66 \times 10^{-27}\ \text{kg}$
rest mass of proton	$m_\text{p} = 1.67 \times 10^{-27}\ \text{kg}$
rest mass of electron	$m_\text{e} = 9.11 \times 10^{-31}\ \text{kg}$
Avogadro constant	$N_\text{A} = 6.02 \times 10^{23}\ \text{mol}^{-1}$
molar gas constant	$R = 8.31\ \text{J K}^{-1}\ \text{mol}^{-1}$
Boltzmann constant	$k = 1.38 \times 10^{-23}\ \text{J K}^{-1}$
gravitational constant	$G = 6.67 \times 10^{-11}\ \text{N m}^2\ \text{kg}^{-2}$
permittivity of free space	$\varepsilon_0 = 8.85 \times 10^{-12}\ \text{F m}^{-1}$ $\left(\frac{1}{4\pi\varepsilon_0} = 8.99 \times 10^{9}\ \text{m F}^{-1}\right)$
Planck constant	$h = 6.63 \times 10^{-34}\ \text{J s}$
Stefan–Boltzmann constant	$\sigma = 5.67 \times 10^{-8}\ \text{W m}^{-2}\ \text{K}^{-4}$

Formulae

uniformly accelerated motion	$s = ut + \frac{1}{2}at^2$ $v^2 = u^2 + 2as$
hydrostatic pressure	$\Delta p = \rho g \Delta h$
upthrust	$F = \rho g V$
Doppler effect for sound waves	$f_\text{o} = \frac{f_\text{s} v}{v \pm v_\text{s}}$
electric current	$I = Anvq$
resistors in series	$R = R_1 + R_2 + \ldots$
resistors in parallel	$\frac{1}{R} = \frac{1}{R_1} + \frac{1}{R_2} + \ldots$

© Cambridge University Press & Assessment 2026

DO NOT WRITE IN THIS MARGIN
DO NOT WRITE IN THIS MARGIN
DO NOT WRITE IN THIS MARGIN
DO NOT WRITE IN THIS MARGIN
DO NOT WRITE IN THIS MARGIN

GradeMax

DO NOT WRITE IN THIS MARGIN
DO NOT WRITE IN THIS MARGIN
DO NOT WRITE IN THIS MARGIN
DO NOT WRITE IN THIS MARGIN
DO NOT WRITE IN THIS MARGIN

gravitational potential	$\phi = -\frac{GM}{r}$
gravitational potential energy	$E_P = -\frac{GMm}{r}$
pressure of an ideal gas	$p = \frac{1}{3}\frac{Nm}{V}\langle c^2 \rangle$
simple harmonic motion	$a = -\omega^2 x$
velocity of particle in s.h.m.	$v = v_0 \cos \omega t$ $v = \pm \omega \sqrt{(x_0^2 - x^2)}$
electric potential	$V = \frac{Q}{4\pi\varepsilon_0 r}$
electrical potential energy	$E_P = \frac{Qq}{4\pi\varepsilon_0 r}$
capacitors in series	$\frac{1}{C} = \frac{1}{C_1} + \frac{1}{C_2} + ...$
capacitors in parallel	$C = C_1 + C_2 + ...$
discharge of a capacitor	$x = x_0 e^{-\frac{t}{RC}}$
Hall voltage	$V_H = \frac{BI}{ntq}$
alternating current/voltage	$x = x_0 \sin \omega t$
radioactive decay	$x = x_0 e^{-\lambda t}$
decay constant	$\lambda = \frac{0.693}{t_{\frac{1}{2}}}$
intensity reflection coefficient	$\frac{I_R}{I_0} = \frac{(Z_1 - Z_2)^2}{(Z_1 + Z_2)^2}$
Stefan–Boltzmann law	$L = 4\pi\sigma r^2 T^4$
Doppler redshift	$\frac{\Delta\lambda}{\lambda} \approx \frac{\Delta f}{f} \approx \frac{v}{c}$

© Cambridge University Press & Assessment 2026

GradeMax

1 **(a)** With reference to velocity and acceleration, describe uniform circular motion.

.....

.....

..... [2]

(b) An aircraft is travelling in a horizontal circle of radius 7200 m at a speed of 180 m s^{-1}, as shown in the view from above in Figure 1.1.

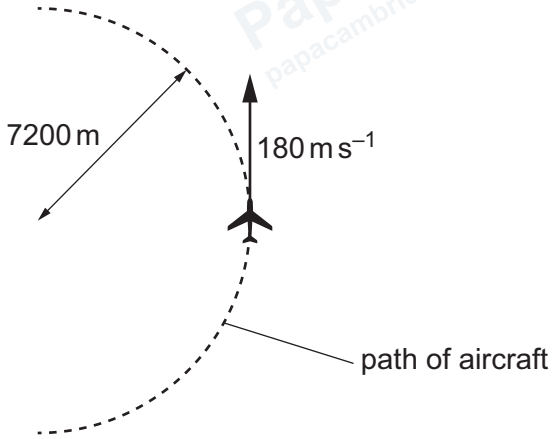

not to scale

Figure 1.1

In order to move in a circle, the aircraft has to tilt its wings so that the lift force from the wings is not vertical, as shown in the view from behind in Figure 1.2.

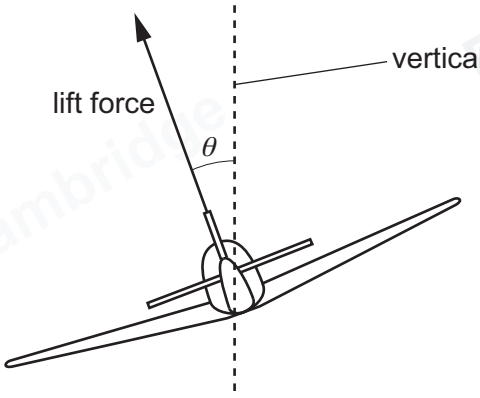

not to scale

Figure 1.2

DO NOT WRITE IN THIS MARGIN
DO NOT WRITE IN THIS MARGIN
DO NOT WRITE IN THIS MARGIN
DO NOT WRITE IN THIS MARGIN
DO NOT WRITE IN THIS MARGIN

© Cambridge University Press & Assessment 2026

GradeMax

(i) With reference to the forces acting on the aircraft, explain why the circular motion of the aircraft requires the lift force to be in the direction shown rather than vertically upwards.

.....

.....

..... [2]

(ii) On Figure 1.2, draw an arrow from the aircraft to represent the direction of the resultant force on the aircraft. [1]

(iii) Calculate the centripetal acceleration of the aircraft.

acceleration = ... $m\,s^{-2}$ [2]

(iv) Determine the angle θ at which the aircraft is tilted. Explain your reasoning.

θ = ... ° [3]

[Total: 10]

DO NOT WRITE IN THIS MARGIN
DO NOT WRITE IN THIS MARGIN
DO NOT WRITE IN THIS MARGIN
DO NOT WRITE IN THIS MARGIN
DO NOT WRITE IN THIS MARGIN

© Cambridge University Press & Assessment 2026

GradeMax

2 **(a)** **(i)** Define gravitational field at a point.

.....

..... [1]

(ii) Figure 2.1 shows a horizontal section through a small piece of ground at the Earth's surface and the air at a small distance above it.

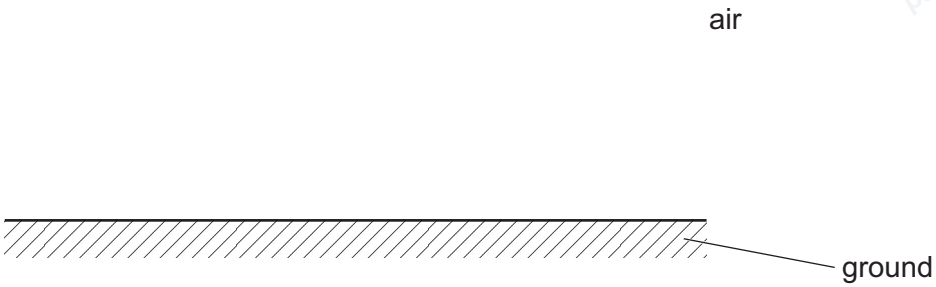

Figure 2.1

On Figure 2.1, draw four field lines to represent the gravitational field of the Earth in the air above the ground. [2]

(b) The Earth may be considered to be an isolated uniform sphere of radius 6.37×10^6 m.

(i) By considering the gravitational field strength at the Earth's surface, calculate a value for the mass of the Earth. Give your answer to three significant figures.

mass = ... kg [2]

DO NOT WRITE IN THIS MARGIN
DO NOT WRITE IN THIS MARGIN
DO NOT WRITE IN THIS MARGIN
DO NOT WRITE IN THIS MARGIN
DO NOT WRITE IN THIS MARGIN

© Cambridge University Press & Assessment 2026

GradeMax

(ii) Determine, to three significant figures, the gravitational potential at the Earth's surface. Give a unit with your answer.

gravitational potential = ... unit ..... [2]

(iii) A satellite of mass 96.0 kg is in circular orbit at a height of 1.93×10^6 m above the Earth's surface.

Determine the gravitational potential energy of the satellite.

gravitational potential energy = ... J [2]

[Total: 9]

DO NOT WRITE IN THIS MARGIN
DO NOT WRITE IN THIS MARGIN
DO NOT WRITE IN THIS MARGIN
DO NOT WRITE IN THIS MARGIN
DO NOT WRITE IN THIS MARGIN

PapaCambridge papacambridge.com

GradeMax

3 **(a)** Define specific heat capacity.

.....

.....

..... [2]

(b) A sample of an ideal gas contains 6.00×10^{23} molecules, each of mass 6.64×10^{-27} kg. The gas is at a pressure of 1.01×10^{5} Pa. It has an initial volume of $0.0243\,m^3$, an initial internal energy of 3676 J and an initial temperature of 296 K.

The gas is now cooled at constant pressure so that its volume becomes 80% of the initial volume.

(i) Show that the magnitude of the work done on the gas is 491 J.

[2]

(ii) Explain whether the work done on the gas is positive or negative.

.....

..... [1]

(iii) Explain why the increase in internal energy of the gas is –735 J.

.....

.....

.....

..... [2]

DO NOT WRITE IN THIS MARGIN
DO NOT WRITE IN THIS MARGIN
DO NOT WRITE IN THIS MARGIN
DO NOT WRITE IN THIS MARGIN
DO NOT WRITE IN THIS MARGIN

© Cambridge University Press & Assessment 2026

GradeMax

(iv) Determine the thermal energy Q transferred to the gas.

Q = ... J [2]

(v) Calculate a value for the specific heat capacity c of the gas for this change.

c = ... $J\,kg^{-1}\,K^{-1}$ [2]

(c) The gas in **3(b)** is now heated at constant volume so that its temperature returns to 296 K.

Use the first law of thermodynamics to explain, without calculation, whether the specific heat capacity for this change is less than, the same as, or greater than the answer in **3(b)(v)**.

.....

.....

.....

.....

..... [3]

[Total: 14]

DO NOT WRITE IN THIS MARGIN
DO NOT WRITE IN THIS MARGIN
DO NOT WRITE IN THIS MARGIN
DO NOT WRITE IN THIS MARGIN
DO NOT WRITE IN THIS MARGIN

GradeMax

4 **(a)** State the **two** assumptions of the kinetic theory of gases that relate to collisions of particles with each other and with the walls of the container of the gas.

1 .....

.....

2 .....

.....

[2]

(b) A single particle of an ideal gas has mass m. The particle is moving at speed u in a cubic box of side length L, as shown in Figure 4.1.

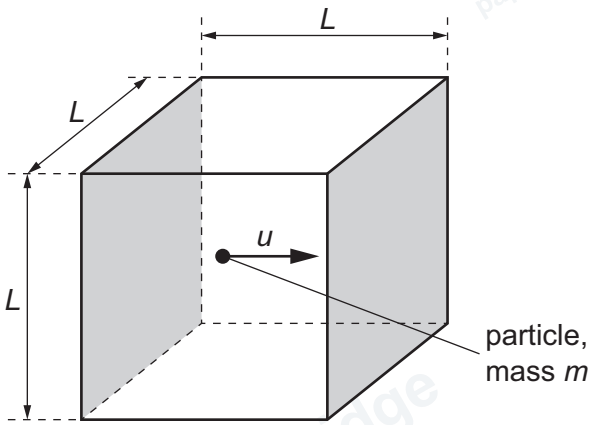

Figure 4.1

The particle is moving in a direction that is perpendicular to the two shaded faces, continually rebounding from one face and then the other.

Determine an expression, in terms of some or all of m, u and L, for:

(i) the magnitude of the change in momentum of the particle during each collision with a shaded face

change in momentum = ... [1]

DO NOT WRITE IN THIS MARGIN
DO NOT WRITE IN THIS MARGIN
DO NOT WRITE IN THIS MARGIN
DO NOT WRITE IN THIS MARGIN
DO NOT WRITE IN THIS MARGIN

© Cambridge University Press & Assessment 2026

GradeMax

(ii) the time taken between consecutive collisions of the particle with **one** of the shaded faces

time = ... [1]

(iii) the mean force exerted on the particle by one of the shaded faces

mean force = ... [1]

(iv) the mean pressure p exerted over the area of each of the shaded faces by the particle. Explain your reasoning.

p = ... [2]

(c) An ideal gas consists of N particles moving in many different directions with a mean-square speed of $\langle c^2 \rangle$.

Explain how the equation in **4(b)(iv)** is modified to arrive at the more general equation

$$pV = \frac{1}{3} Nm \langle c^2 \rangle$$

where V is the volume of the gas.

.....

.....

.....

.....

..... [3]

[Total: 10]

DO NOT WRITE IN THIS MARGIN
DO NOT WRITE IN THIS MARGIN
DO NOT WRITE IN THIS MARGIN
DO NOT WRITE IN THIS MARGIN
DO NOT WRITE IN THIS MARGIN

© Cambridge University Press & Assessment 2026

GradeMax

5 A block of mass 27 g is suspended from a spring so that it rests in equilibrium, as shown in Figure 5.1.

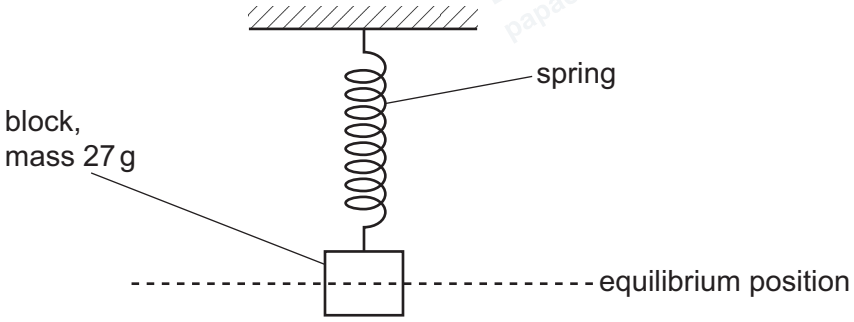

Figure 5.1

The block is displaced downwards through a small distance. The block is released and then oscillates vertically with simple harmonic motion.

The oscillations have a period of 1.7 s and an energy of 13 μJ.

(a) (i) Show that the angular frequency of the oscillations is 3.7 rad s^{-1}.

[1]

(ii) State what is meant by the amplitude of the oscillations.

.....

.....

..... [1]

(iii) Calculate the amplitude of the oscillations.

amplitude = ... m [3]

DO NOT WRITE IN THIS MARGIN
DO NOT WRITE IN THIS MARGIN
DO NOT WRITE IN THIS MARGIN
DO NOT WRITE IN THIS MARGIN
DO NOT WRITE IN THIS MARGIN

© Cambridge University Press & Assessment 2026

GradeMax

(b) On Figure 5.2, sketch the variation of the kinetic energy E_K of the block with displacement x from the equilibrium position for one complete oscillation of the block. Add a suitable scale to the x-axis.

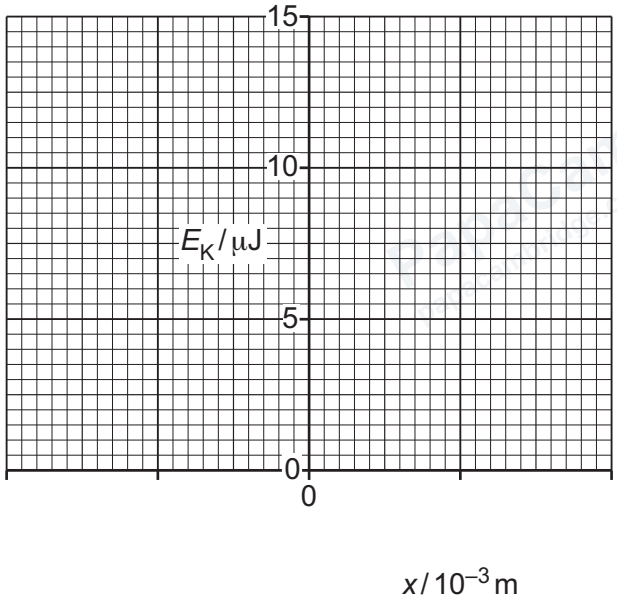

Figure 5.2

[3]

[Total: 8]

DO NOT WRITE IN THIS MARGIN
DO NOT WRITE IN THIS MARGIN
DO NOT WRITE IN THIS MARGIN
DO NOT WRITE IN THIS MARGIN
DO NOT WRITE IN THIS MARGIN

PapaCambridge papacambridge.com

6 **(a)** Define electric potential at a point.

.....

.....

..... [2]

(b) An isolated conducting sphere of radius R is in a vacuum. The sphere has a charge of $+Q$ distributed around its surface, as illustrated in Figure 6.1.

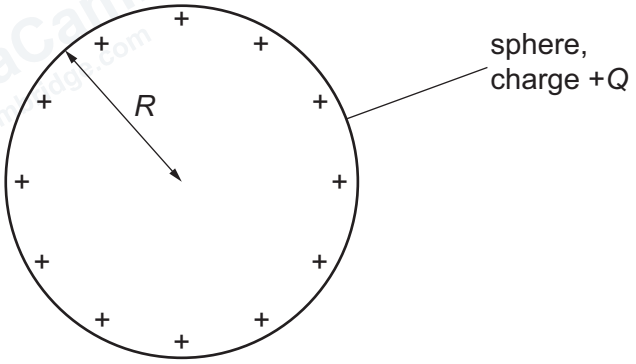

Figure 6.1

(i) State an expression, in terms of R and Q, for the magnitude V_0 of the electric potential at the surface of the sphere. Identify any other symbols that you use.

V_0 = ... [1]

(ii) On Figure 6.2, sketch the variation of the electric potential V at distance x from the centre of the sphere between $x = R$ and $x = 3R$.

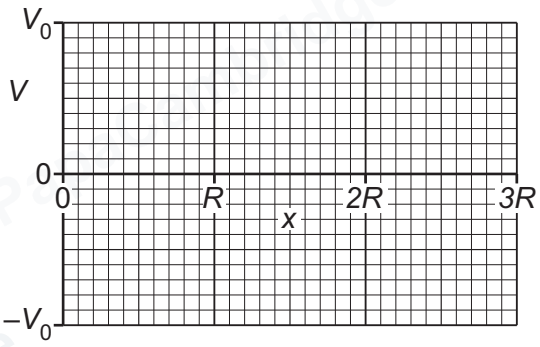

Figure 6.2

[3]

© Cambridge University Press & Assessment 2026

GradeMax

DO NOT WRITE IN THIS MARGIN

PapaCambridge papacambridge.com

GradeMax

(c) The dome of an electrostatic generator, called a Van de Graaff generator, may be considered to be a conducting sphere of radius 11.9 cm.

The dome is charged so that the electric potential at its surface is -4.80×10^4 V.

(i) Calculate the charge on the surface of the dome.

charge = ... C [2]

(ii) Explain why the dome acts as a capacitor.

.....

..... [1]

(iii) Calculate the capacitance of the dome. Give a unit with your answer.

capacitance = ... unit ..... [2]

(iv) Determine the energy stored by the dome.

energy = ... J [2]

[Total: 13]

DO NOT WRITE IN THIS MARGIN
DO NOT WRITE IN THIS MARGIN
DO NOT WRITE IN THIS MARGIN
DO NOT WRITE IN THIS MARGIN
DO NOT WRITE IN THIS MARGIN

© Cambridge University Press & Assessment 2026

GradeMax

7 A Hall probe consists of a slice of conducting material, as shown in Figure 7.1.

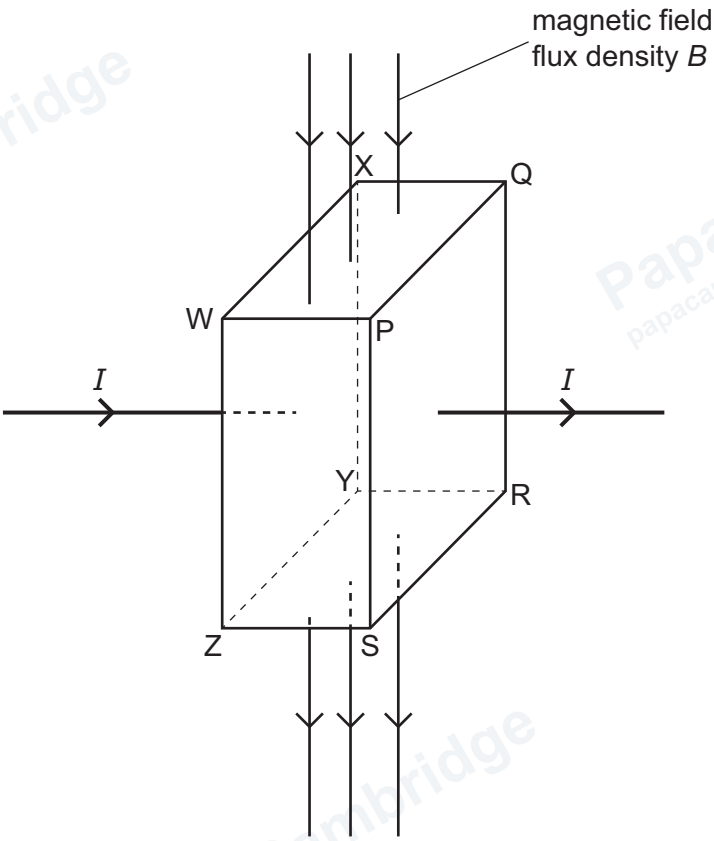

Figure 7.1

Current I enters the slice at face WXYZ and leaves it at face PQRS.

The slice is in a uniform magnetic field of flux density B. This magnetic field is perpendicular to faces WXQP and ZYRS.

A Hall voltage V_H is induced between two of the faces of the slice.

(a) (i) Using the letters P, Q, R, S, W, X, Y and Z, identify the faces of the slice between which the Hall voltage is induced.

..... and ..... [1]

© Cambridge University Press & Assessment 2026

DO NOT WRITE IN THIS MARGIN
DO NOT WRITE IN THIS MARGIN
DO NOT WRITE IN THIS MARGIN
DO NOT WRITE IN THIS MARGIN
DO NOT WRITE IN THIS MARGIN

(ii) The magnitude of the Hall voltage in Figure 7.1 is given by the equation

$$V_H = \frac{BI}{nqt}.$$

State the meanings of the symbols n, q and t in this equation.

n .....

q .....

t .....

[3]

(b) (i) Explain the origin of the Hall voltage.

.....

.....

.....

.....

.....

..... [3]

(ii) Identify which of the faces in **7(a)(i)** is at the higher potential. Explain your reasoning.

.....

.....

..... [1]

[Total: 8]

DO NOT WRITE IN THIS MARGIN
DO NOT WRITE IN THIS MARGIN
DO NOT WRITE IN THIS MARGIN
DO NOT WRITE IN THIS MARGIN
DO NOT WRITE IN THIS MARGIN

GradeMax

8 A sinusoidal alternating input voltage V_{IN} is supplied to a circuit that produces a rectified and smoothed output voltage V_{OUT}.

The variations with time t of V_{IN} and V_{OUT} are shown in Figure 8.1 and Figure 8.2 respectively.

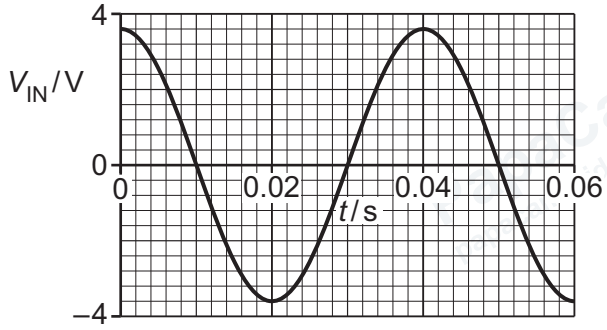

Figure 8.1

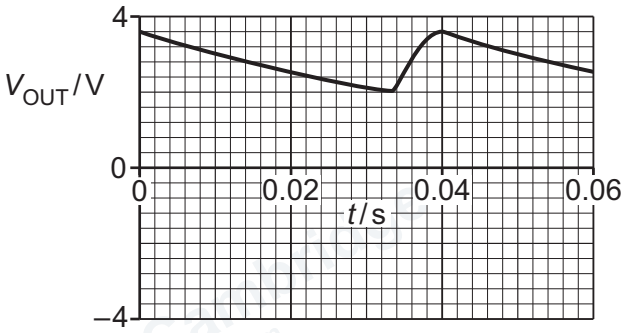

Figure 8.2

(a) (i) State the name of the component in the circuit that produces the rectification.

..... [1]

(ii) State the name of the component in the circuit that produces the smoothing.

..... [1]

(b) (i) Determine the peak value of V_{IN}.

peak value of V_{IN} = ... V [1]

(ii) Determine the period of V_{IN}.

period of V_{IN} = ... s [1]

© Cambridge University Press & Assessment 2026

DO NOT WRITE IN THIS MARGIN
DO NOT WRITE IN THIS MARGIN
DO NOT WRITE IN THIS MARGIN
DO NOT WRITE IN THIS MARGIN
DO NOT WRITE IN THIS MARGIN

GradeMax

(c) Apart from the peak value and period of V_{IN}, determine **three** other conclusions that can be drawn from Figure 8.1 and Figure 8.2 about the input and output voltages and about the circuit. The conclusions may be qualitative or quantitative. Use the space for any working.

1 .....

.....

2 .....

.....

3 .....

.....

[3]

[Total: 7]

DO NOT WRITE IN THIS MARGIN
DO NOT WRITE IN THIS MARGIN
DO NOT WRITE IN THIS MARGIN
DO NOT WRITE IN THIS MARGIN
DO NOT WRITE IN THIS MARGIN

GradeMax

9 **(a)** State what is meant by the de Broglie wavelength.

.....

.....

..... [1]

(b) Complete Table 9.1 to identify experimental evidence for the wave nature and the particulate nature of matter and of electromagnetic radiation.

Table 9.1

	evidence for	
	wave nature	**particle nature**
matter	....	....
electromagnetic radiation	....	....

[4]

(c) An electron in a vacuum is accelerated from rest by a potential difference (p.d.) of 3.5 kV.

For the accelerated electron, calculate

(i) the speed

speed = ... $m\,s^{-1}$ [3]

DO NOT WRITE IN THIS MARGIN
DO NOT WRITE IN THIS MARGIN
DO NOT WRITE IN THIS MARGIN
DO NOT WRITE IN THIS MARGIN
DO NOT WRITE IN THIS MARGIN

© Cambridge University Press & Assessment 2026

GradeMax

(ii) the de Broglie wavelength.

wavelength = ... m [2]

[Total: 10]

DO NOT WRITE IN THIS MARGIN
DO NOT WRITE IN THIS MARGIN
DO NOT WRITE IN THIS MARGIN
DO NOT WRITE IN THIS MARGIN
DO NOT WRITE IN THIS MARGIN

GradeMax

10 **(a)** Define the binding energy of a nucleus.

.....

.....

..... [2]

(b) A star emits radiation that is produced in a series of nuclear reactions that form helium from hydrogen. The reactions may be summarised by the overall equation

$$4\,{}^{1}_{1}\mathrm{H} \rightarrow {}^{4}_{2}\mathrm{He} + 2\,{}^{0}_{1}\mathrm{X}$$

where X is a particle that has no binding energy.

All of the radiation emitted by the star is produced by this series of nuclear reactions.

The mass defect of the ${}^{4}_{2}\mathrm{He}$ nuclide is 0.030 377 u, where u is the unified atomic mass unit.

(i) State the name of particle X.

..... [1]

(ii) Show that the binding energy of the ${}^{4}_{2}\mathrm{He}$ nuclide is 4.54×10^{-12} J.

[2]

(c) The star in **10(b)** has a luminosity of 7.98×10^{27} W. An observer on the Earth detects radiation from this star at a distance away of 8.15×10^{16} m.

(i) Calculate the radiant flux intensity F detected by the observer.

F = ... $\mathrm{W\,m^{-2}}$ [2]

© Cambridge University Press & Assessment 2026

DO NOT WRITE IN THIS MARGIN
DO NOT WRITE IN THIS MARGIN
DO NOT WRITE IN THIS MARGIN
DO NOT WRITE IN THIS MARGIN
DO NOT WRITE IN THIS MARGIN

GradeMax

(ii) The mass of hydrogen in the star decreases continuously as a result of the series of nuclear reactions.

Determine the rate of decrease of mass of hydrogen in the star.

rate of decrease of mass = ... $kg\,s^{-1}$ [4]

[Total: 11]

DO NOT WRITE IN THIS MARGIN
DO NOT WRITE IN THIS MARGIN
DO NOT WRITE IN THIS MARGIN
DO NOT WRITE IN THIS MARGIN
DO NOT WRITE IN THIS MARGIN

© Cambridge University Press & Assessment 2026

GradeMax

BLANK PAGE

DO NOT WRITE IN THIS MARGIN
DO NOT WRITE IN THIS MARGIN
DO NOT WRITE IN THIS MARGIN
DO NOT WRITE IN THIS MARGIN
DO NOT WRITE IN THIS MARGIN

Permission to reproduce items where third-party owned material protected by copyright is included has been sought and cleared where possible. Every reasonable effort has been made by the publisher (Cambridge University Press & Assessment) to trace copyright holders, but if any items requiring clearance have unwittingly been included, the publisher will be pleased to make amends at the earliest possible opportunity.

To avoid the issue of disclosure of answer-related information to candidates, all copyright acknowledgements are reproduced online in our Copyright Acknowledgements Booklet. This is produced for each series of examinations and is freely available to download at www.cambridgeinternational.org after the live examination series.

Cambridge International Education is the name of our awarding body and a part of Cambridge University Press & Assessment, which is a department of the University of Cambridge.

© Cambridge University Press & Assessment 2026