GradeMax

* 0000800000001 * DFD

CAMBRIDGE
International Education

Cambridge International AS & A Level

CANDIDATE NAME

CENTRE NUMBER

CANDIDATE NUMBER

* 7 2 3 3 4 0 5 6 4 2 *

PHYSICS **9702/51**

Paper 5 Planning, Analysis and Evaluation **May/June 2026**

1 hour 15 minutes

You must answer on the question paper.

No additional materials are needed.

INSTRUCTIONS

- Answer **all** questions.
- Use a black or dark blue pen. You may use an HB pencil for any diagrams or graphs.
- Write your name, centre number and candidate number in the boxes at the top of the page.
- Write your answer to each question in the space provided.
- Do **not** use an erasable pen. Do **not** use correction fluid or tape.
- Do **not** write on any bar codes.
- You may use a calculator.
- You should show all your working and use appropriate units.

INFORMATION

- The total mark for this paper is 30.
- The number of marks for each question or part question is shown in brackets [ ].

This document has **8** pages.

DC (CE/CB) 356125/2
© Cambridge University Press & Assessment 2026

[Turn over

1 A rod is fixed horizontally. A solid bar of mass M is attached to the rod by two vertical strings so that the bar is horizontal, as shown in Figure 1.1.

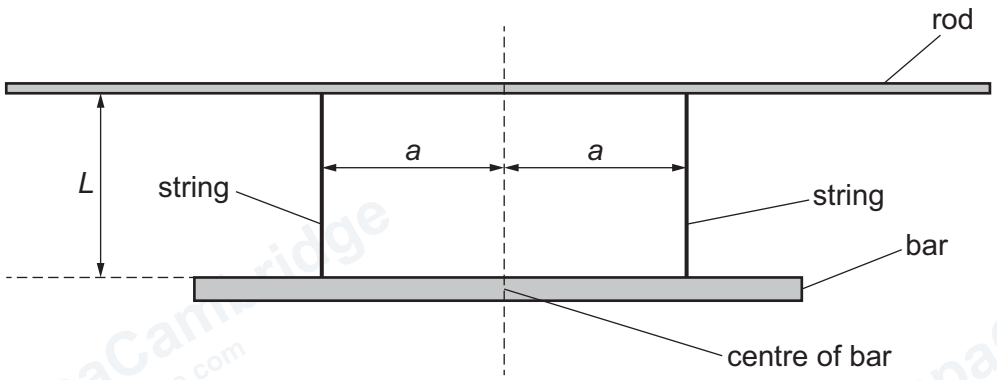

Figure 1.1

The vertical strings are equal horizontal distances a from the centre of the bar.

The separation between the rod and the bar is L.

One end of the bar is displaced horizontally and then released. The bar rotates with oscillations about its centre. The period of the oscillations is T.

It is suggested that T is related to a by the relationship

$$T = \frac{2\pi P}{a^q}\sqrt{\frac{L}{M}}$$

where P and q are constants.

Plan a laboratory experiment to test the relationship between T and a.

Draw a diagram showing the arrangement of your equipment.

Explain how the results could be used to determine values for P and q.

In your plan, you should include:

- the procedure to be followed
- the measurements to be taken
- the control of variables
- the analysis of the data
- any safety precautions to be taken.

DO NOT WRITE IN THIS MARGIN
DO NOT WRITE IN THIS MARGIN
DO NOT WRITE IN THIS MARGIN
DO NOT WRITE IN THIS MARGIN
DO NOT WRITE IN THIS MARGIN

© Cambridge University Press & Assessment 2026

GradeMax

Diagram

DO NOT WRITE IN THIS MARGIN
DO NOT WRITE IN THIS MARGIN
DO NOT WRITE IN THIS MARGIN
DO NOT WRITE IN THIS MARGIN
DO NOT WRITE IN THIS MARGIN

PapaCambridge
papacambridge.com

GradeMax

.....

.....

.....

GradeMax

2 A long tube contains a liquid of density σ. Two rubber bands are placed on the tube towards the bottom as shown in Figure 2.1.

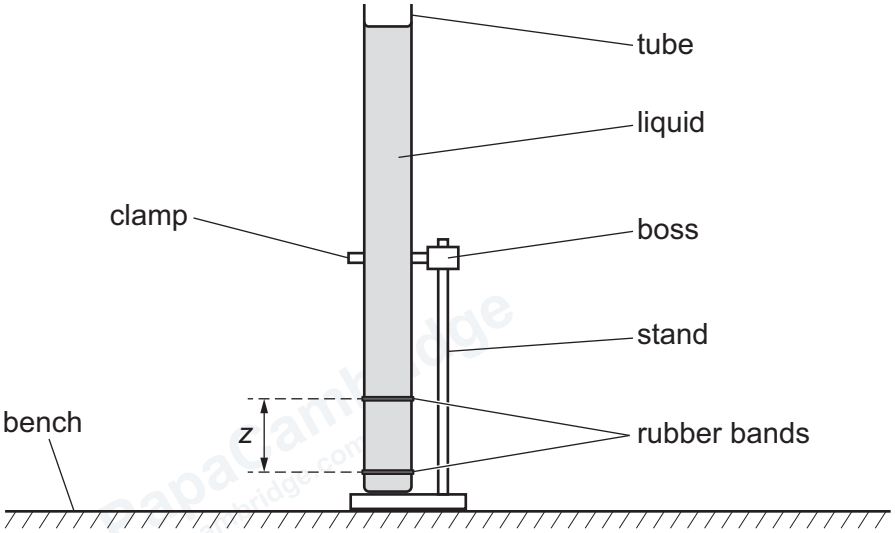

Figure 2.1

The distance between the two rubber bands is z.

A small steel ball of diameter d is dropped from the surface of the liquid. The time t for the ball to pass between the two rubber bands is measured.

The experiment is repeated with steel balls of different diameters.

It is suggested that t and d are related by the equation

$$\frac{z}{t} = \frac{gd^2(\rho - \sigma)}{18\beta}$$

where g is the acceleration of free fall, ρ is the density of steel and β is a constant.

(a) A graph is plotted of t on the y-axis against $\frac{1}{d^2}$ on the x-axis.

Determine an expression for the gradient.

gradient = ... [1]

DO NOT WRITE IN THIS MARGIN
DO NOT WRITE IN THIS MARGIN
DO NOT WRITE IN THIS MARGIN
DO NOT WRITE IN THIS MARGIN
DO NOT WRITE IN THIS MARGIN

(b) Values of d and t are given in Table 2.1.

Table 2.1

d / mm	$\frac{1}{d^2}$ / mm^{-2}	t / s
2.6 ± 0.1		6.10
3.0 ± 0.1		4.40
3.4 ± 0.1		3.35
4.1 ± 0.1		2.25
4.4 ± 0.1		1.95
5.0 ± 0.1		1.45

Calculate and record values of $\frac{1}{d^2}$ / mm^{-2} in Table 2.1. Include the absolute uncertainties in $\frac{1}{d^2}$. [2]

(c) (i) Plot a graph of t / s against $\frac{1}{d^2}$ / mm^{-2}. Include error bars for $\frac{1}{d^2}$. [2]

(ii) Draw the straight line of best fit and a worst acceptable straight line on your graph. Label both lines. [2]

(iii) Determine the gradient of the line of best fit. Include the absolute uncertainty in your answer.

gradient = ... [2]

© Cambridge University Press & Assessment 2026

GradeMax

DO NOT WRITE IN THIS MARGIN

DO NOT WRITE IN THIS MARGIN

DO NOT WRITE IN THIS MARGIN

DO NOT WRITE IN THIS MARGIN

DO NOT WRITE IN THIS MARGIN

GradeMax

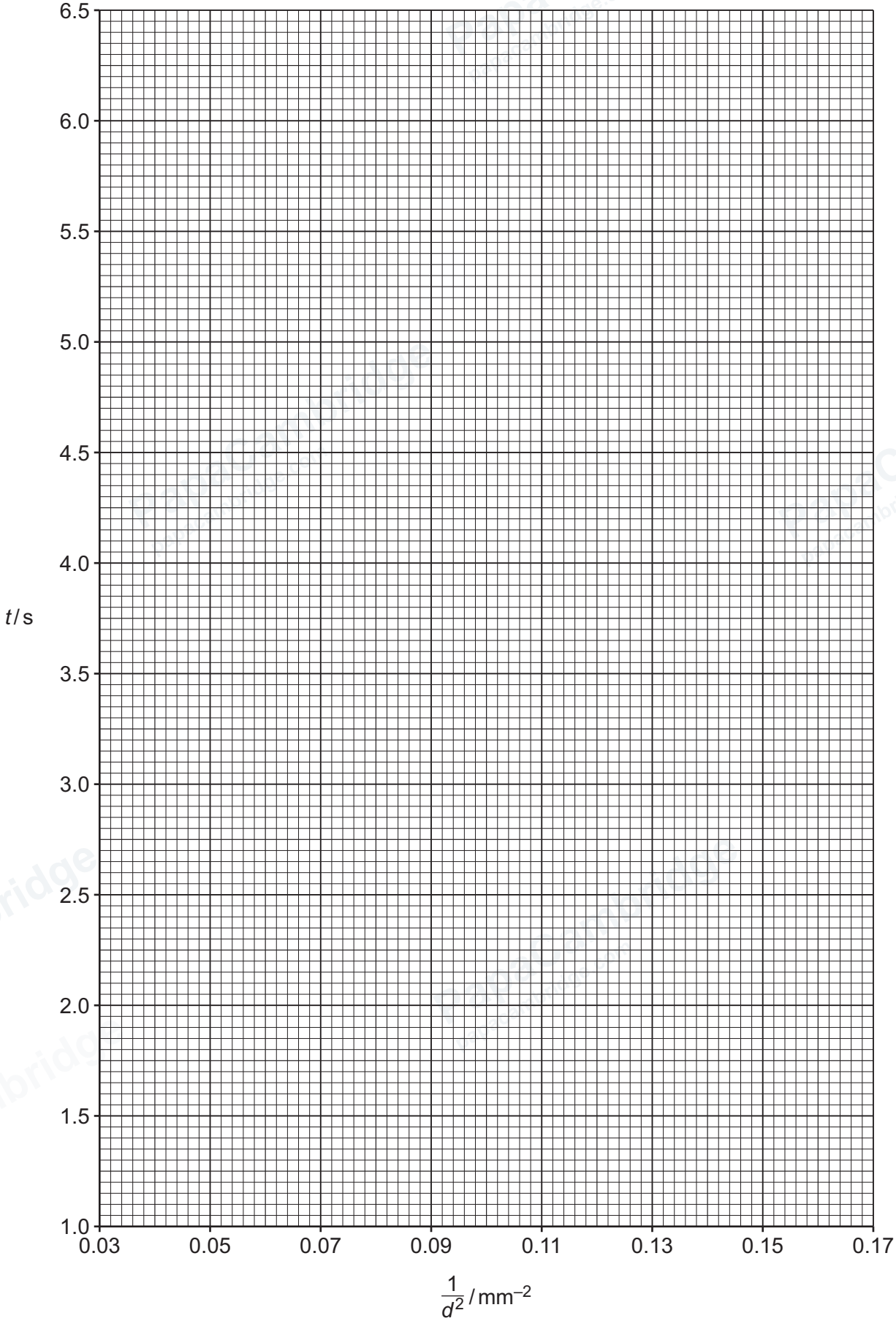

DO NOT WRITE IN THIS MARGIN
DO NOT WRITE IN THIS MARGIN
DO NOT WRITE IN THIS MARGIN
DO NOT WRITE IN THIS MARGIN
DO NOT WRITE IN THIS MARGIN

GradeMax

(d) The density ρ of steel is $(7850 \pm 50)\,\text{kg m}^{-3}$.
The density σ of the liquid is $(1250 \pm 50)\,\text{kg m}^{-3}$.

Calculate $(\rho - \sigma)$. Include the absolute uncertainty.

$(\rho - \sigma)$ = ... kg m^{-3} [1]

(e) **(i)** Using your answers to **2(a)**, **2(c)(iii)** and **2(d)**, determine the value of β. Include an appropriate unit.

Data: $g = 9.81\,\text{m s}^{-2}$
$z = (97 \pm 2)\,\text{mm}$

β = ... [2]

(ii) Determine the percentage uncertainty in β.

percentage uncertainty in β = ...% [1]

(f) The experiment is repeated using a steel ball with a diameter of $(1.20 \pm 0.01)\,\text{cm}$. Determine the time t. Include the absolute uncertainty.

t = ... s [2]

[Total: 15]

To avoid the issue of disclosure of answer-related information to candidates, all copyright acknowledgements are reproduced online in our Copyright Acknowledgements Booklet. This is produced for each series of examinations and is freely available to download at www.cambridgeinternational.org after the live examination series.

© Cambridge University Press & Assessment 2026

DO NOT WRITE IN THIS MARGIN
DO NOT WRITE IN THIS MARGIN
DO NOT WRITE IN THIS MARGIN
DO NOT WRITE IN THIS MARGIN
DO NOT WRITE IN THIS MARGIN