GradeMax

* 0000800000001 * DFD

CAMBRIDGE
International Education

Cambridge International AS & A Level

CANDIDATE NAME

CENTRE NUMBER

CANDIDATE NUMBER

* 0 7 6 9 5 0 8 3 7 2 *

PHYSICS **9702/52**

Paper 5 Planning, Analysis and Evaluation **May/June 2026**

1 hour 15 minutes

You must answer on the question paper.

No additional materials are needed.

INSTRUCTIONS

- Answer **all** questions.
- Use a black or dark blue pen. You may use an HB pencil for any diagrams or graphs.
- Write your name, centre number and candidate number in the boxes at the top of the page.
- Write your answer to each question in the space provided.
- Do **not** use an erasable pen. Do **not** use correction fluid or tape.
- Do **not** write on any bar codes.
- You may use a calculator.
- You should show all your working and use appropriate units.

INFORMATION

- The total mark for this paper is 30.
- The number of marks for each question or part question is shown in brackets [ ].

This document has **8** pages.

DC (SL/FC) 356126/2
© Cambridge University Press & Assessment 2026

[Turn over

1 A capacitor is connected to a reed switch, a d.c. power supply of negligible internal resistance and a resistor as shown in Figure 1.1.

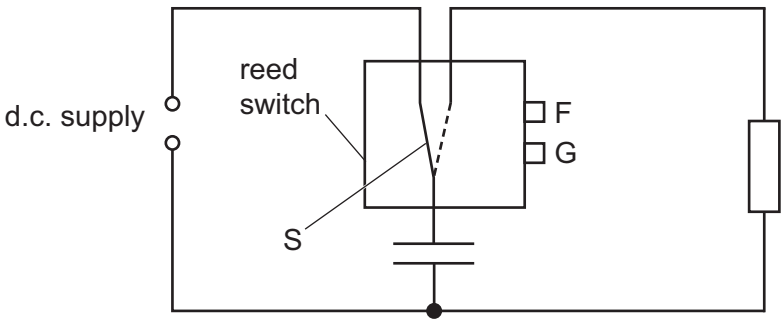

Figure 1.1

The reed switch is a device that contains a two-way switch S that connects the capacitor either to the d.c. supply or to the resistor.

An alternating current is supplied to terminals F and G of the reed switch. This causes switch S to vibrate. The frequency *f* of switch S is the same as the frequency of the alternating current.

For half of one cycle of the alternating current, the capacitor is charged from the d.c. supply. For the other half of the cycle, the capacitor discharges through the resistor. The mean current in the resistor is I.

The capacitor is created from two circular metal plates in air. The plates each have area *A*. The plates are separated by a small distance *h*.

It is suggested that I is related to *h* by the relationship

$$\frac{KA}{h} = \frac{I}{fE}$$

where *E* is the electromotive force (e.m.f.) of the d.c. supply and *K* is a constant.

Plan a laboratory experiment to test the relationship between I and *h*.

Draw a diagram showing the arrangement of your equipment.

Explain how the results could be used to determine a value for *K*.

In your plan, you should include:

- the procedure to be followed
- the measurements to be taken
- the control of variables
- the analysis of the data
- any safety precautions to be taken.

DO NOT WRITE IN THIS MARGIN
DO NOT WRITE IN THIS MARGIN
DO NOT WRITE IN THIS MARGIN
DO NOT WRITE IN THIS MARGIN
DO NOT WRITE IN THIS MARGIN

© Cambridge University Press & Assessment 2026

GradeMax

Diagram

DO NOT WRITE IN THIS MARGIN
DO NOT WRITE IN THIS MARGIN
DO NOT WRITE IN THIS MARGIN
DO NOT WRITE IN THIS MARGIN
DO NOT WRITE IN THIS MARGIN

PapaCambridge papacambridge.com

GradeMax

.....

.....

.....

GradeMax

2 A bar is fixed between two stands. A rod of mass M is suspended from the bar by two parallel strings as shown in Figure 2.1.

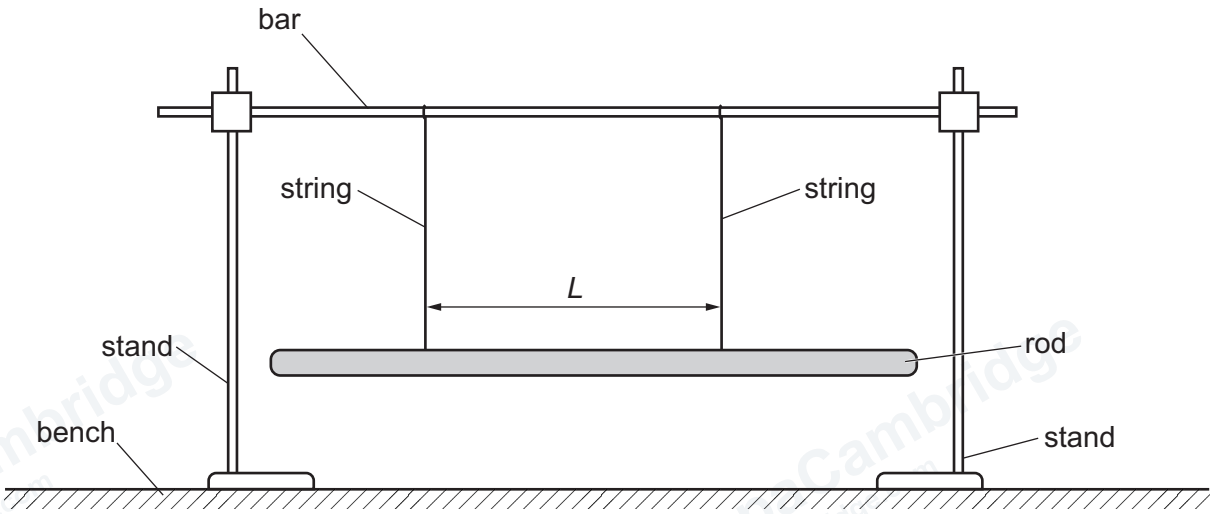

Figure 2.1

The separation of the two strings is L.

One end of the rod is displaced horizontally and then released. The rod rotates with oscillations about its centre. The time for 10 oscillations is t. The period T of the oscillations is determined.

The experiment is repeated for different values of L.

It is suggested that T and L are related by the equation

$$T = \frac{2\pi}{L}\sqrt{\frac{\alpha D}{Mg}}$$

where g is the acceleration of free fall, D is the distance between the bar and the rod, and α is a constant.

(a) A graph is plotted of T^2 on the y-axis against $\frac{1}{L^2}$ on the x-axis.

Determine an expression for the gradient.

gradient = ... [1]

DO NOT WRITE IN THIS MARGIN
DO NOT WRITE IN THIS MARGIN
DO NOT WRITE IN THIS MARGIN
DO NOT WRITE IN THIS MARGIN
DO NOT WRITE IN THIS MARGIN

© Cambridge University Press & Assessment 2026

(b) Values of L and t are given in Table 2.1.

Table 2.1

L/cm	t/s	$\frac{1}{L^2}$/m^{-2}	T/s	T^2/s^2
27.4	15.8 ± 0.2			
30.4	14.5 ± 0.2			
34.8	12.6 ± 0.2			
40.8	10.8 ± 0.2			
48.4	9.2 ± 0.2			
55.2	8.0 ± 0.2			

Calculate and record values of $\frac{1}{L^2}$/m^{-2}, T/s and T^2/s^2 in Table 2.1. Include the absolute uncertainties in T and T^2. [2]

(c) **(i)** Plot a graph of T^2/s^2 against $\frac{1}{L^2}$/m^{-2}. Include error bars for T^2. [2]

(ii) Draw the straight line of best fit and a worst acceptable straight line on your graph. Label both lines. [2]

(iii) Determine the gradient of the line of best fit. Include the absolute uncertainty in your answer.

gradient = ... [2]

© Cambridge University Press & Assessment 2026

GradeMax

DO NOT WRITE IN THIS MARGIN

DO NOT WRITE IN THIS MARGIN

DO NOT WRITE IN THIS MARGIN

DO NOT WRITE IN THIS MARGIN

DO NOT WRITE IN THIS MARGIN

GradeMax

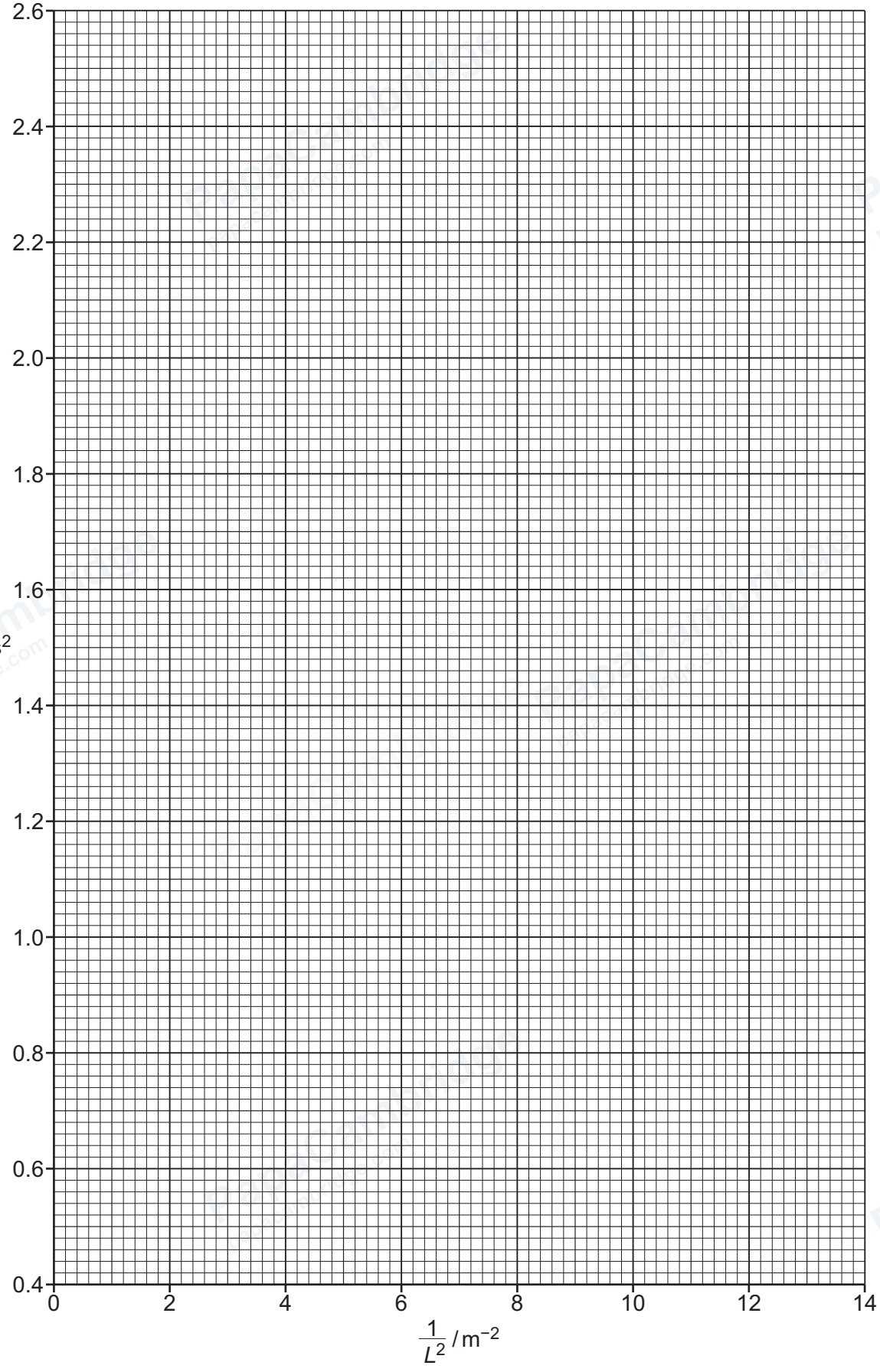

DO NOT WRITE IN THIS MARGIN
DO NOT WRITE IN THIS MARGIN
DO NOT WRITE IN THIS MARGIN
DO NOT WRITE IN THIS MARGIN
DO NOT WRITE IN THIS MARGIN

© Cambridge University Press & Assessment 2026

GradeMax

(d) The distance between the bar and the rod is measured several times:

0.826 m 0.829 m 0.824 m 0.821 m.

Determine the mean distance D. Include the absolute uncertainty.

D = ... m [1]

(e) **(i)** Using your answers to **2(a)**, **2(c)(iii)** and **2(d)**, determine the value of α. Include an appropriate unit.

Data: $g = 9.81\,\text{m s}^{-2}$
$M = (97 \pm 2)\,\text{g}$

α = ... [2]

(ii) Determine the percentage uncertainty in α.

percentage uncertainty in α = ...% [1]

(f) The experiment is repeated. Determine the separation L of the two strings that gives a value of T of (2.20 ± 0.02) s. Include the absolute uncertainty.

L = ... m [2]

[Total: 15]

To avoid the issue of disclosure of answer-related information to candidates, all copyright acknowledgements are reproduced online in our Copyright Acknowledgements Booklet. This is produced for each series of examinations and is freely available to download at www.cambridgeinternational.org after the live examination series.

© Cambridge University Press & Assessment 2026

DO NOT WRITE IN THIS MARGIN
DO NOT WRITE IN THIS MARGIN
DO NOT WRITE IN THIS MARGIN
DO NOT WRITE IN THIS MARGIN
DO NOT WRITE IN THIS MARGIN