GradeMax

* 0000800000001 * DFD

CAMBRIDGE
International Education

Cambridge International AS & A Level

CANDIDATE NAME

CENTRE NUMBER

CANDIDATE NUMBER

* 5 5 3 7 2 0 1 2 4 3 *

PHYSICS **9702/54**

Paper 5 Planning, Analysis and Evaluation **May/June 2026**

1 hour 15 minutes

You must answer on the question paper.

No additional materials are needed.

INSTRUCTIONS

- Answer **all** questions.
- Use a black or dark blue pen. You may use an HB pencil for any diagrams or graphs.
- Write your name, centre number and candidate number in the boxes at the top of the page.
- Write your answer to each question in the space provided.
- Do **not** use an erasable pen. Do **not** use correction fluid or tape.
- Do **not** write on any bar codes.
- You may use a calculator.
- You should show all your working and use appropriate units.

INFORMATION

- The total mark for this paper is 30.
- The number of marks for each question or part question is shown in brackets [ ].

This document has **8** pages.

DC (SL/SG) 362031/2
© Cambridge University Press & Assessment 2026

[Turn over

GradeMax

1 A thin sheet of cardboard is supported by four springs. Figure 1.1 shows a side view of the arrangement.

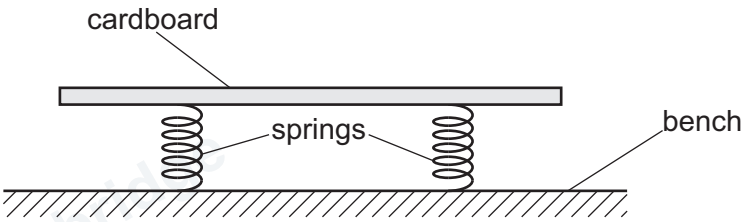

Figure 1.1

A steel ball of radius r is dropped onto the cardboard. The speed of the ball as it hits the cardboard is v.

As the ball hits the cardboard, the springs compress. The maximum compression of the springs is c.

Several steel balls of different radii are available.

It is suggested that c is related to r by the relationship

$$\frac{v^2}{c^2} = \frac{\alpha}{\pi\rho r^3} + Z$$

where ρ is the density of steel, and α and Z are constants.

Plan a laboratory experiment to test the relationship between c and r.

Draw a diagram showing the arrangement of your equipment.

Explain how the results could be used to determine values for α and Z.

In your plan, you should include:

- the procedure to be followed
- the measurements to be taken
- the control of variables
- the analysis of the data
- any safety precautions to be taken.

DO NOT WRITE IN THIS MARGIN
DO NOT WRITE IN THIS MARGIN
DO NOT WRITE IN THIS MARGIN
DO NOT WRITE IN THIS MARGIN
DO NOT WRITE IN THIS MARGIN

© Cambridge University Press & Assessment 2026

GradeMax

Diagram

DO NOT WRITE IN THIS MARGIN
DO NOT WRITE IN THIS MARGIN
DO NOT WRITE IN THIS MARGIN
DO NOT WRITE IN THIS MARGIN
DO NOT WRITE IN THIS MARGIN

PapaCambridge papacambridge.com

GradeMax

.....

.....

.....

GradeMax

2 A student places a steel strip of thickness d and width w between two blocks that are fixed to the bench. A load is added to the strip as shown in Figure 2.1.

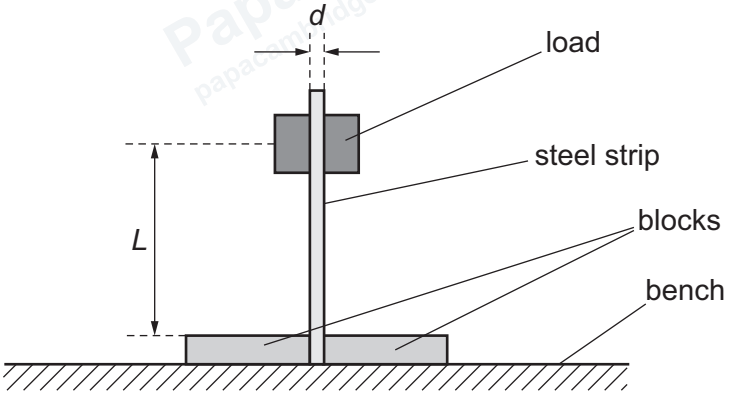

Figure 2.1

The distance between the blocks and the centre of gravity of the load is L.

The load is displaced a small distance and released so that it oscillates. The time t for 20 oscillations is measured. The period T of the oscillations is calculated.

The experiment is repeated for steel strips with the same thickness but different widths.

It is suggested that T and w are related by the equation

$$E = \frac{16\pi^2 ML^3}{wT^2 d^3}$$

where E is the Young modulus of steel and M is the mass of the load.

(a) A graph is plotted of T^2 on the y-axis against $\frac{1}{w}$ on the x-axis.

Determine an expression for the gradient.

gradient = ... [1]

DO NOT WRITE IN THIS MARGIN
DO NOT WRITE IN THIS MARGIN
DO NOT WRITE IN THIS MARGIN
DO NOT WRITE IN THIS MARGIN
DO NOT WRITE IN THIS MARGIN

(b) Values of w, $\frac{1}{w}$ and t are given in Table 2.1.

Table 2.1

w / mm	$\frac{1}{w}$ / m^{-1}	t / s	T / s	T^2 / s^2
8.5	118	8.00 ± 0.08		
9.8	102	7.42 ± 0.08		
11.7	85.5	6.78 ± 0.08		
14.1	70.9	6.20 ± 0.08		
16.3	61.3	5.78 ± 0.08		
19.2	52.1	5.42 ± 0.08		

Calculate and record values of T / s and T^2 / s^2 in Table 2.1. Include the absolute uncertainties in T and T^2. [2]

(c) **(i)** Plot a graph of T^2 / s^2 against $\frac{1}{w}$ / m^{-1}. Include error bars for T^2. [2]

(ii) Draw the straight line of best fit and a worst acceptable straight line on your graph. Label both lines. [2]

(iii) Determine the gradient of the line of best fit. Include the absolute uncertainty in your answer.

gradient = ... [2]

DO NOT WRITE IN THIS MARGIN
DO NOT WRITE IN THIS MARGIN
DO NOT WRITE IN THIS MARGIN
DO NOT WRITE IN THIS MARGIN
DO NOT WRITE IN THIS MARGIN

© Cambridge University Press & Assessment 2026

GradeMax

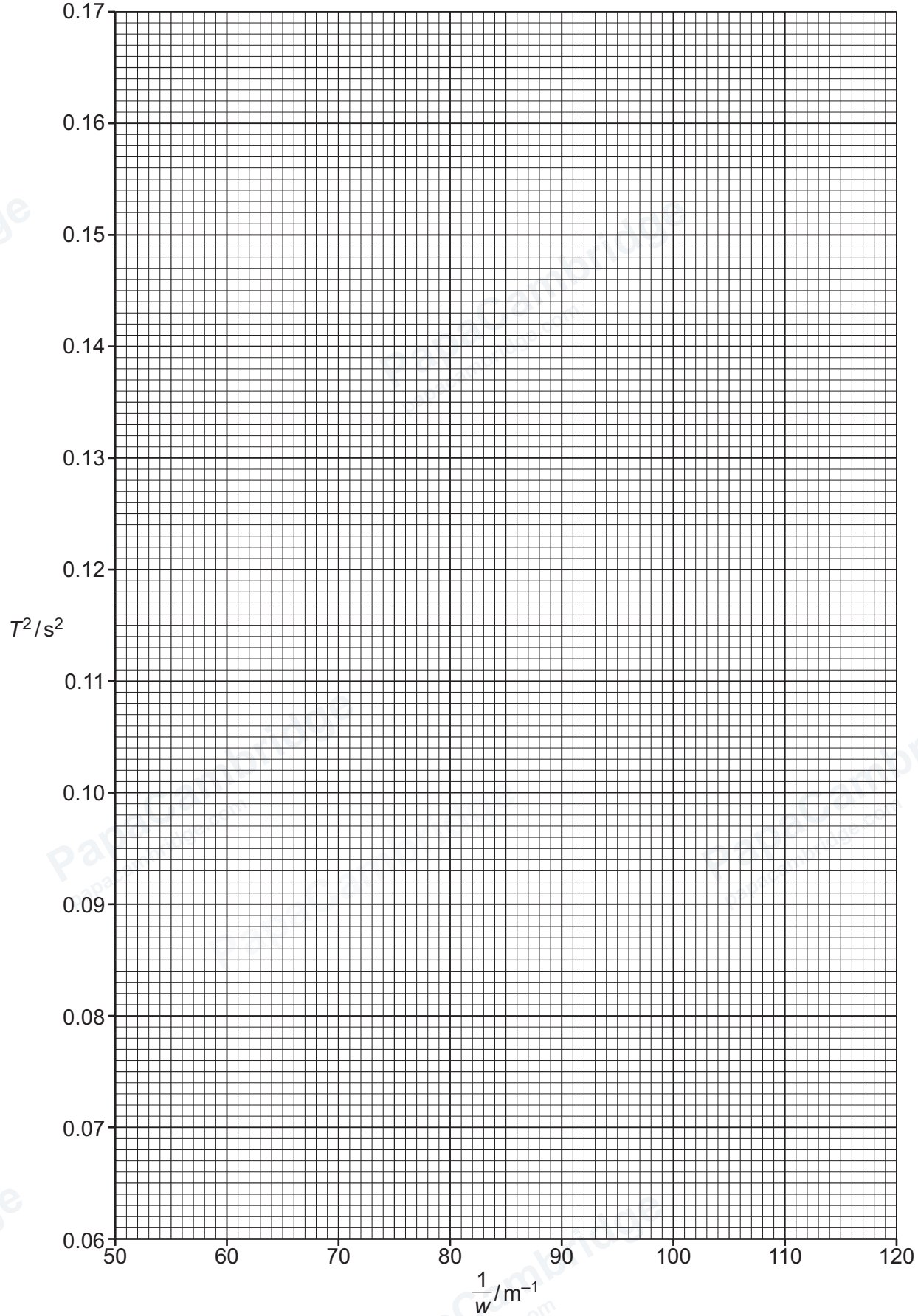

DO NOT WRITE IN THIS MARGIN
DO NOT WRITE IN THIS MARGIN
DO NOT WRITE IN THIS MARGIN
DO NOT WRITE IN THIS MARGIN
DO NOT WRITE IN THIS MARGIN

© Cambridge University Press & Assessment 2026

(d) The thickness of the strips is measured several times:

0.98 mm 0.99 mm 0.93 mm 0.97 mm 0.98 mm.

Determine the mean thickness *d*. Include the absolute uncertainty.

d = ... mm [1]

(e) **(i)** Using your answers to **2(a)**, **2(c)(iii)** and **2(d)**, determine the value of *E*. Include an appropriate unit.

Data: $M = (100 \pm 5)$ g
$L = (26.2 \pm 0.2)$ cm

E = ... [2]

(ii) Determine the percentage uncertainty in *E*.

percentage uncertainty in *E* = ... % [1]

(f) The experiment is repeated. Determine the width *w* that gives a value of *T* of (0.500 ± 0.004) s. Include the absolute uncertainty.

w = ... m [2]

[Total: 15]

To avoid the issue of disclosure of answer-related information to candidates, all copyright acknowledgements are reproduced online in our Copyright Acknowledgements Booklet. This is produced for each series of examinations and is freely available to download at www.cambridgeinternational.org after the live examination series.

© Cambridge University Press & Assessment 2026

DO NOT WRITE IN THIS MARGIN
DO NOT WRITE IN THIS MARGIN
DO NOT WRITE IN THIS MARGIN
DO NOT WRITE IN THIS MARGIN
DO NOT WRITE IN THIS MARGIN