GradeMax

* 0000800000001 * DFD

CAMBRIDGE
International Education

Cambridge IGCSE™

CANDIDATE NAME

CENTRE NUMBER

CANDIDATE NUMBER

0641478087

ADDITIONAL MATHEMATICS **0606/13**

Paper 1 Non-calculator **May/June 2026**

2 hours

You must answer on the question paper.

No additional materials are needed.

INSTRUCTIONS

- Answer **all** questions.
- Use a black or dark blue pen. You may use an HB pencil for any diagrams or graphs.
- Write your name, centre number and candidate number in the boxes at the top of the page.
- Write your answer to each question in the space provided.
- Do **not** use an erasable pen. Do **not** use correction fluid or tape.
- Do **not** write on any bar codes.
- Calculators must **not** be used in this paper.
- You must show all necessary working clearly.

INFORMATION

- The total mark for this paper is 80.
- The number of marks for each question or part question is shown in brackets [ ].

This document has **16** pages. Any blank pages are indicated.

DC (PQ/SW) 360552/1
© Cambridge University Press & Assessment 2026

[Turn over

GradeMax

List of formulas

Equation of a circle with centre (a, b) and radius r. $(x-a)^2 + (y-b)^2 = r^2$

Curved surface area, A, of cone of radius r, sloping edge l. $A = \pi rl$

Surface area, A, of sphere of radius r. $A = 4\pi r^2$

Volume, V, of pyramid or cone, base area A, height h. $V = \frac{1}{3}Ah$

Volume, V, of sphere of radius r. $V = \frac{4}{3}\pi r^3$

Quadratic equation

For the equation $ax^2 + bx + c = 0$,

$$x = \frac{-b \pm \sqrt{b^2 - 4ac}}{2a}$$

Binomial theorem

$$(a+b)^n = a^n + \binom{n}{1}a^{n-1}b + \binom{n}{2}a^{n-2}b^2 + \ldots + \binom{n}{r}a^{n-r}b^r + \ldots + b^n,$$

where n is a positive integer and $\binom{n}{r} = \frac{n!}{(n-r)!r!}$

Arithmetic series

$$u_n = a + (n-1)d$$
$$S_n = \frac{1}{2}n(a+l) = \frac{1}{2}n\{2a + (n-1)d\}$$

Geometric series

$$u_n = ar^{n-1}$$
$$S_n = \frac{a(1-r^n)}{1-r} \quad (r \neq 1)$$
$$S_\infty = \frac{a}{1-r} \quad (|r| < 1)$$

Identities

$$\sin^2 A + \cos^2 A = 1$$
$$\sec^2 A = 1 + \tan^2 A$$
$$\operatorname{cosec}^2 A = 1 + \cot^2 A$$

Formulas for ΔABC

$$\frac{a}{\sin A} = \frac{b}{\sin B} = \frac{c}{\sin C}$$
$$a^2 = b^2 + c^2 - 2bc\cos A$$
$$\Delta = \frac{1}{2}ab\sin C$$

© Cambridge University Press & Assessment 2026

DO NOT WRITE IN THIS MARGIN
DO NOT WRITE IN THIS MARGIN
DO NOT WRITE IN THIS MARGIN
DO NOT WRITE IN THIS MARGIN
DO NOT WRITE IN THIS MARGIN

GradeMax

1 **(a)** Write $2x^2 - 6x + 5$ in the form $a(x+b)^2 + c$, where a, b and c are constants. [3]

(b) Hence or otherwise solve the inequality $2x^2 - 6x + 5 > 13$. [3]

DO NOT WRITE IN THIS MARGIN
DO NOT WRITE IN THIS MARGIN
DO NOT WRITE IN THIS MARGIN
DO NOT WRITE IN THIS MARGIN
DO NOT WRITE IN THIS MARGIN

© Cambridge University Press & Assessment 2026

2 An arithmetic progression has first term a and common difference d, where $a \neq 0$ and $d \neq 0$.

- The sum of the 6th and 11th terms is 0.
- The sum of the first 6 terms is -30.

Find the values of a and d. [5]

3 **(a)** Solve the equation $\log_x 9 = \log_9(x^4)$. [4]

DO NOT WRITE IN THIS MARGIN
DO NOT WRITE IN THIS MARGIN
DO NOT WRITE IN THIS MARGIN
DO NOT WRITE IN THIS MARGIN
DO NOT WRITE IN THIS MARGIN

© Cambridge University Press & Assessment 2026

GradeMax

(b) Solve the equation $2^{2x-2} + 3(2^x) - 40 = 0$. [4]

(c) Solve the equation $\left|x^2 + 3x - 4\right| = 6$. [4]

DO NOT WRITE IN THIS MARGIN
DO NOT WRITE IN THIS MARGIN
DO NOT WRITE IN THIS MARGIN
DO NOT WRITE IN THIS MARGIN
DO NOT WRITE IN THIS MARGIN

© Cambridge University Press & Assessment 2026

4 The polynomial p is given by $\mathrm{p}(x) = 4x^3 - 5x^2 - 7x + 2$.

(a) Show that $x - 2$ is a factor of $\mathrm{p}(x)$. [1]

(b) Write $\mathrm{p}(x)$ as a product of linear factors. [3]

(c) Hence solve the equation $4u^6 - 5u^4 - 7u^2 + 2 = 0$. [2]

DO NOT WRITE IN THIS MARGIN
DO NOT WRITE IN THIS MARGIN
DO NOT WRITE IN THIS MARGIN
DO NOT WRITE IN THIS MARGIN
DO NOT WRITE IN THIS MARGIN

© Cambridge University Press & Assessment 2026

GradeMax

5 **(a)** On the grid, sketch the graph of $y = \cos x + 2$ for $-360° \leqslant x \leqslant 360°$. [1]

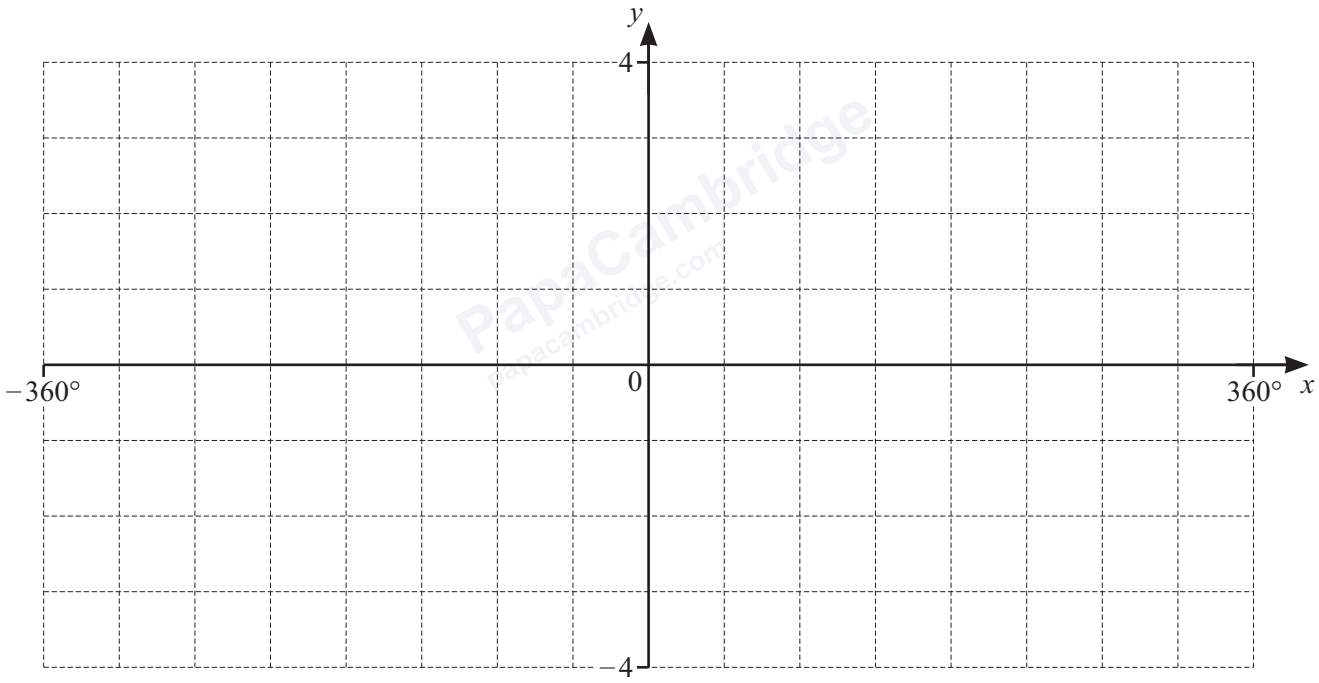

(b) On the grid, sketch the graph of $y = 4\sin 2x$ for $-180° \leqslant x \leqslant 180°$. [2]

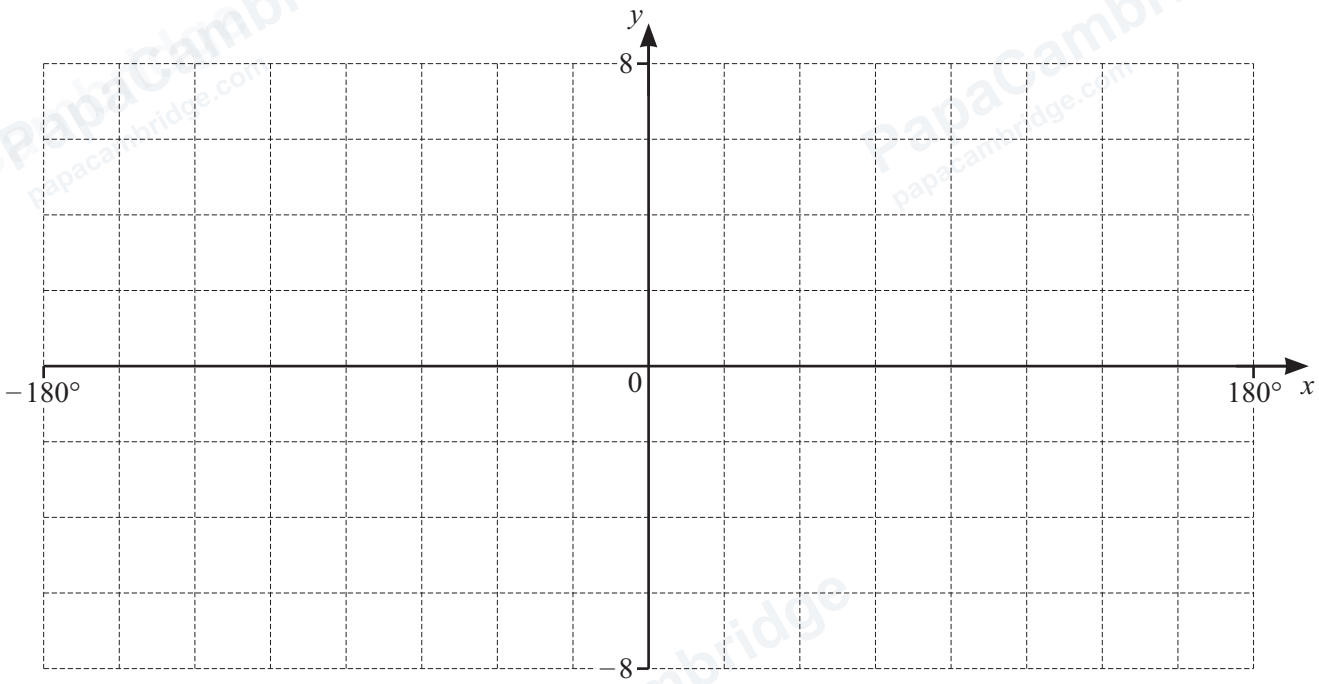

DO NOT WRITE IN THIS MARGIN
DO NOT WRITE IN THIS MARGIN
DO NOT WRITE IN THIS MARGIN
DO NOT WRITE IN THIS MARGIN
DO NOT WRITE IN THIS MARGIN

© Cambridge University Press & Assessment 2026

6 In this question time is in seconds and lengths are in centimetres.

You are given that $\cos 30° = \frac{\sqrt{3}}{2}$, $\sin 30° = \frac{1}{2}$ and $\tan 30° = \frac{1}{\sqrt{3}}$.

A water tank is shaped as a cone with its axis vertical.
The angle between the vertical axis and the sloping edge of the cone is 30°.

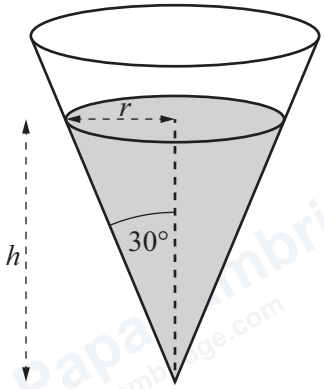

At time t the depth of the water is h, the volume of water in the tank is V, and the radius of the circle formed by the surface of the water is r.

(a) Show that $V = \frac{1}{9}\pi h^3$. [2]

Water is flowing into the tank at a constant rate of $50\,\text{cm}^3\,\text{s}^{-1}$.

(b) Find the rate at which h is increasing at the instant when $h = 60$.
Give your answer in terms of π. [4]

DO NOT WRITE IN THIS MARGIN
DO NOT WRITE IN THIS MARGIN
DO NOT WRITE IN THIS MARGIN
DO NOT WRITE IN THIS MARGIN
DO NOT WRITE IN THIS MARGIN

© Cambridge University Press & Assessment 2026

GradeMax

7 The number of combinations of r objects out of 20 objects is $\frac{4}{3}$ times the number of combinations of $r+1$ objects out of 20 objects.

Find the value of r. [4]

DO NOT WRITE IN THIS MARGIN
DO NOT WRITE IN THIS MARGIN
DO NOT WRITE IN THIS MARGIN
DO NOT WRITE IN THIS MARGIN
DO NOT WRITE IN THIS MARGIN

PapaCambridge papacambridge.com

GradeMax

8 A function f is defined by $f(x) = e^{2x+1}$ for $x \in \mathbb{R}$.

(a) State the range of f^{-1}. [1]

(b) Find the domain of f^{-1}. [1]

(c) Find an expression for $f^{-1}(x)$. [2]

DO NOT WRITE IN THIS MARGIN
DO NOT WRITE IN THIS MARGIN
DO NOT WRITE IN THIS MARGIN
DO NOT WRITE IN THIS MARGIN
DO NOT WRITE IN THIS MARGIN

© Cambridge University Press & Assessment 2026

GradeMax

(d) On the axes, sketch the graph of $y = f(x)$ and hence sketch the graph of $y = f^{-1}(x)$. State the exact coordinates of any intercepts with the axes. [4]

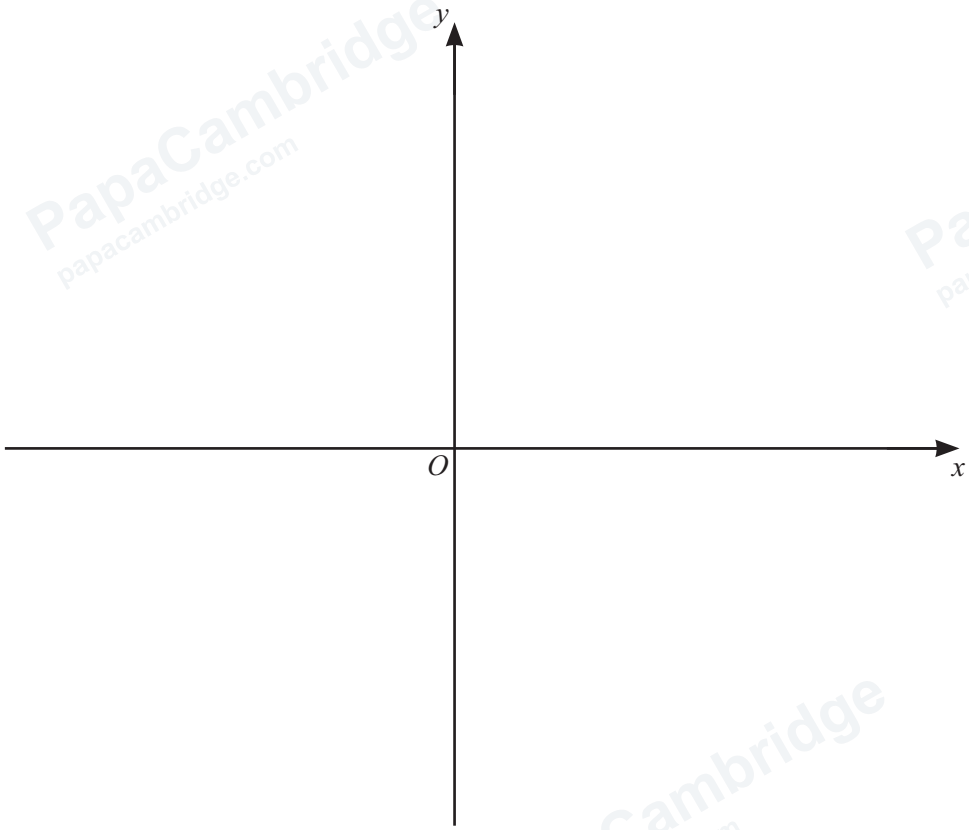

DO NOT WRITE IN THIS MARGIN
DO NOT WRITE IN THIS MARGIN
DO NOT WRITE IN THIS MARGIN
DO NOT WRITE IN THIS MARGIN
DO NOT WRITE IN THIS MARGIN

PapaCambridge papacambridge.com

GradeMax

9 A circle has centre (3, 1) and radius 1.
A line has equation $2y + x = c$, where c is a constant.

(a) Given that the line is a tangent to the circle, find the two possible values of c. [7]

(b) When c takes a value between the two values found in **9(a)**, state the relationship between the line and the circle. [1]

DO NOT WRITE IN THIS MARGIN
DO NOT WRITE IN THIS MARGIN
DO NOT WRITE IN THIS MARGIN
DO NOT WRITE IN THIS MARGIN
DO NOT WRITE IN THIS MARGIN

© Cambridge University Press & Assessment 2026

GradeMax

10 The parallelogram $OABC$ is such that $\overrightarrow{OA} = \mathbf{a}$ and $\overrightarrow{OB} = \mathbf{b}$.
The point D lies on OB such that $OD : OB = 1 : 3$.
The point E lies on AC such that $AE : AC = 2 : 3$.

Show that $\overrightarrow{DE}$ is parallel to $\overrightarrow{AB}$. [5]

DO NOT WRITE IN THIS MARGIN
DO NOT WRITE IN THIS MARGIN
DO NOT WRITE IN THIS MARGIN
DO NOT WRITE IN THIS MARGIN
DO NOT WRITE IN THIS MARGIN

PapaCambridge papacambridge.com

11

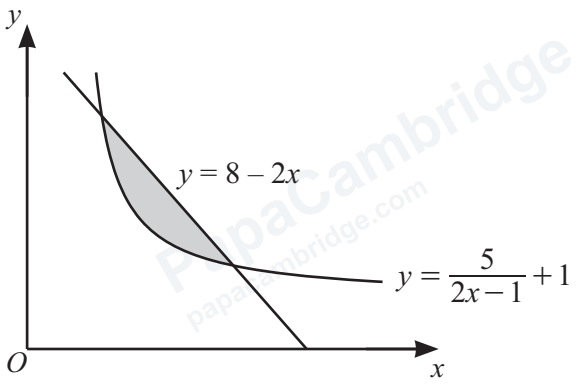

The diagram shows part of the curve $y = \frac{5}{2x-1} + 1$ and part of the line $y = 8 - 2x$.

Find the exact area of the shaded region enclosed by the curve and the line. [10]

DO NOT WRITE IN THIS MARGIN
DO NOT WRITE IN THIS MARGIN
DO NOT WRITE IN THIS MARGIN
DO NOT WRITE IN THIS MARGIN
DO NOT WRITE IN THIS MARGIN

© Cambridge University Press & Assessment 2026

GradeMax

12 A curve has equation $y = e^{\frac{2a}{x}}$ where a is a positive constant.

(a) Find $\frac{dy}{dx}$ in terms of a. [2]

The normal to the curve at the point where $x = a$ passes through the origin.

(b) Find the value of a. [5]

DO NOT WRITE IN THIS MARGIN
DO NOT WRITE IN THIS MARGIN
DO NOT WRITE IN THIS MARGIN
DO NOT WRITE IN THIS MARGIN
DO NOT WRITE IN THIS MARGIN

© Cambridge University Press & Assessment 2026

GradeMax

BLANK PAGE

DO NOT WRITE IN THIS MARGIN
DO NOT WRITE IN THIS MARGIN
DO NOT WRITE IN THIS MARGIN
DO NOT WRITE IN THIS MARGIN
DO NOT WRITE IN THIS MARGIN

Permission to reproduce items where third-party owned material protected by copyright is included has been sought and cleared where possible. Every reasonable effort has been made by the publisher (Cambridge University Press & Assessment) to trace copyright holders, but if any items requiring clearance have unwittingly been included, the publisher will be pleased to make amends at the earliest possible opportunity.

To avoid the issue of disclosure of answer-related information to candidates, all copyright acknowledgements are reproduced online in our Copyright Acknowledgements Booklet. This is produced for each series of examinations and is freely available to download at www.cambridgeinternational.org after the live examination series.

Cambridge International Education is the name of our awarding body and a part of Cambridge University Press & Assessment, which is a department of the University of Cambridge.

© Cambridge University Press & Assessment 2026