GradeMax

Cambridge Assessment International Education

Cambridge IGCSE™

CANDIDATE NAME									
CENTRE NUMBER						CANDIDATE NUMBER				

8587187923

BIOLOGY **0610/52**

Paper 5 Practical Test **February/March 2022**

1 hour 15 minutes

You must answer on the question paper.

You will need: The materials and apparatus listed in the confidential instructions

INSTRUCTIONS

- Answer **all** questions.
- Use a black or dark blue pen. You may use an HB pencil for any diagrams or graphs.
- Write your name, centre number and candidate number in the boxes at the top of the page.
- Write your answer to each question in the space provided.
- Do **not** use an erasable pen or correction fluid.
- Do **not** write on any bar codes.
- You may use a calculator.
- You should show all your working and use appropriate units.

INFORMATION

- The total mark for this paper is 40.
- The number of marks for each question or part question is shown in brackets [ ].

For Examiner's Use	
1	
2	
Total	

This document has **12** pages. Any blank pages are indicated.

DC (CJ/CB) 303955/3
© UCLES 2022

[Turn over

GradeMax

1 You are going to investigate the effect of surface area on the rate of diffusion.

You will be preparing different sized blocks of agar. The agar contains universal indicator. The blocks of agar have different surface areas. You will place the blocks of agar into hydrochloric acid and measure the time taken for the acid to diffuse to the centre of the agar block. The agar block will change colour as the acid diffuses through it.

Read all the instructions but DO NOT CARRY THEM OUT until you have drawn a table for your results in the space provided in 1(a)(i).

You should use the safety equipment provided while you are carrying out the practical work.

Step 1 Use the measuring cylinder to put 10 cm^3 of hydrochloric acid into each of the four test-tubes. Place the test-tubes in the test-tube rack.

Step 2 You are provided with a large piece of agar which is approximately 1.0 cm thick. Use the knife and the ruler to cut two blocks from the large piece of agar, that each measure approximately 1.0 cm × 1.0 cm × 1.0 cm, as shown in Fig. 1.1.

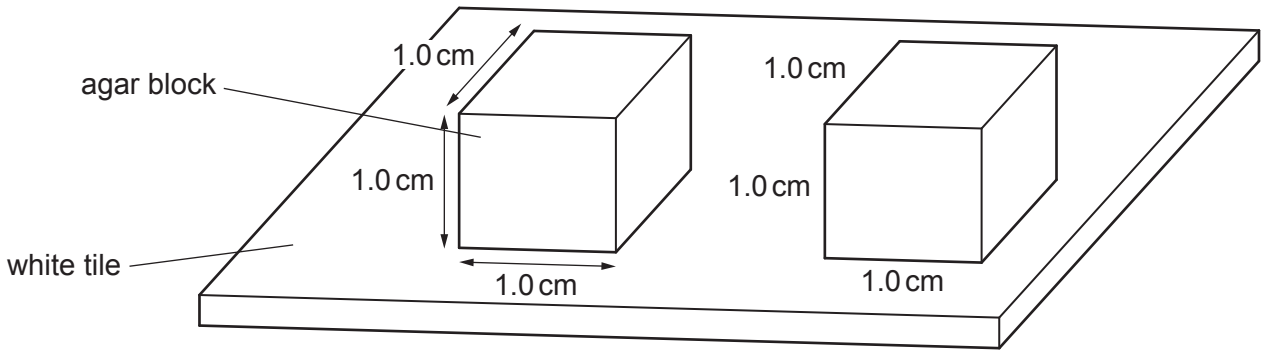

Fig. 1.1

Step 3 Put one of the 1.0 cm × 1.0 cm × 1.0 cm blocks of agar into one of the test-tubes containing hydrochloric acid and immediately start the stop-clock.

Step 4 Observe the colour of the agar block. You may find it easier to observe the colour change if you hold the white card behind the test-tube.

Record in your table in **1(a)(i)** the time taken, in seconds, for the block to become completely red. If the agar block in the test-tube has not become completely red after five minutes, stop observing and record the time as >300 in your table.

Step 5 Cut the second 1.0 cm × 1.0 cm × 1.0 cm block into two blocks that are each 1.0 cm × 1.0 cm x 0.5 cm.

Step 6 Put one of the 1.0 cm × 1.0 cm × 0.5 cm blocks from step 5 into the second test-tube containing hydrochloric acid and immediately start the stop-clock. Repeat step 4.

Step 7 Cut the second 1.0 cm × 1.0 cm × 0.5 cm block into two blocks that are each 1.0 cm × 0.5 cm × 0.5 cm.

Step 8 Put one of the 1.0 cm × 0.5 cm × 0.5 cm blocks from step 7 into the third test-tube containing hydrochloric acid and immediately start the stop-clock. Repeat step 4.

© UCLES 2022

GradeMax

Step 9 Cut the second 1.0 cm × 0.5 cm × 0.5 cm block into two blocks that are each 0.5 cm × 0.5 cm × 0.5 cm.

Step 10 Put one of the 0.5 cm × 0.5 cm × 0.5 cm blocks from step 9 into the fourth test-tube containing hydrochloric acid and immediately start the stop-clock. Repeat step 4.

(a) (i) Prepare a table to record your results.

[4]

(ii) State a conclusion for your results.

.....

.....

..... [1]

(iii) State the variable that you changed (independent variable) in this investigation.

.....

..... [1]

(iv) State **two** variables that were kept constant in this investigation.

1 .....

.....

2 .....

.....

[2]

(v) Suggest **two** ways you could improve the method used in this investigation.

1 .....

.....

.....

2 .....

.....

.....

[2]

(vi) Describe how you carried out step 2 safely.

.....

.....

..... [1]

(b) Table 1.1 shows the surface areas and volumes of the blocks of agar that you used in your investigation.

Table 1.1

length of sides / cm	surface area / cm^2	volume / cm^3	surface area to volume ratio
1.0 × 1.0 × 1.0	6.00	1.000	6:1
1.0 × 1.0 × 0.5	4.00	0.500	8:1
1.0 × 0.5 × 0.5	2.50	0.250	
0.5 × 0.5 × 0.5	1.50	0.125	12:1

Calculate the surface area to volume ratio for the 1.0 cm × 0.5 cm × 0.5 cm block of agar.

..... [1]

© UCLES 2022

GradeMax

BLANK PAGE

(c) (i) Many organisms have adaptations that increase the area of their gas exchange surfaces.

Fig. 1.2 is a photomicrograph of part of a fish gill.

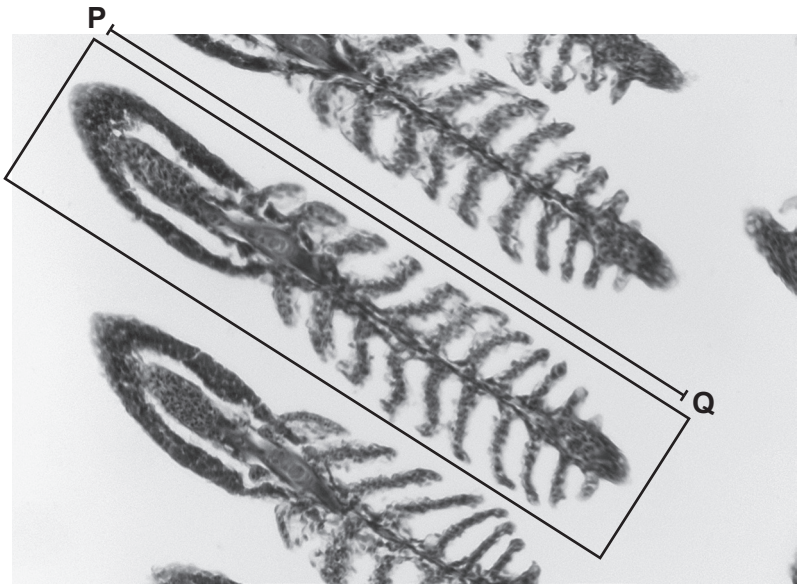

magnification ×550

Fig. 1.2

Draw a large diagram of the part of the fish gill shown in the box in Fig. 1.2.

[4]

© UCLES 2022

(ii) Measure the length of line **PQ** in Fig. 1.2.

length of line **PQ** ..... mm

Calculate the actual length of the part of the fish gill using the formula and your measurement.

$$\text{magnification} = \frac{\text{length of line } \mathbf{PQ}}{\text{actual length of the part of the fish gill}}$$

Give your answer to **three** decimal places.

Space for working.

..... mm
[3]

(d) Fish is a source of protein in the diet.

State how you could test a sample of food to show that it contains protein.

Include the result of a positive test.

.....

.....

.....

..... [2]

GradeMax

(e) Photographic film consists of a plastic sheet coated in crystals. The crystals are fixed to the plastic sheet by gelatin, which is made of protein. If the gelatin is digested by protease enzymes the crystals fall off and the film will become transparent, as shown in Fig. 1.3.

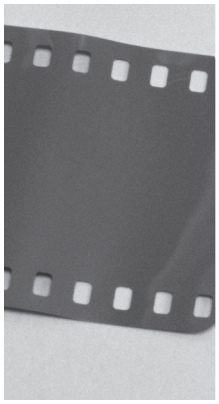

before protease treatment



after protease treatment

Fig. 1.3

Plan an investigation to determine the effect of temperature on the activity of a protease enzyme, using photographic film.

.....

.....

.....

.....

.....

.....

.....

.....

.....

.....

.....

.....

..... [6]

[Total: 27]

© UCLES 2022

GradeMax

BLANK PAGE

GradeMax

2 Cabbage leaves contain vitamin C. Boiling the cabbage in water reduces the vitamin C content of the leaves. Some students investigated the effect of boiling time on the concentration of vitamin C remaining in the cabbage leaves.

(a) The students prepared the cabbage samples using this method:

Step 1 Heat a large volume of water until it begins to boil.

Step 2 Measure the mass of chopped cabbage leaves.

Step 3 Place the chopped cabbage leaves into the boiling water.

Step 4 Continue to boil the water.

Step 5 Remove a sample of cabbage leaves from the water at each time interval.

State **two** pieces of apparatus, other than safety equipment, that would be required to carry out the method described in steps **1 and 2**.

1 .....

2 .....
[2]

(b) The vitamin C concentration of each cabbage leaf sample was then determined.

The results of the investigation are shown in Table 2.1.

Table 2.1

boiling time / minutes	vitamin C concentration / mg per 100 g of cabbage leaves
0	34
5	31
10	26
15	22
25	13

© UCLES 2022

(i) Plot a line graph on the grid of the data in Table 2.1.

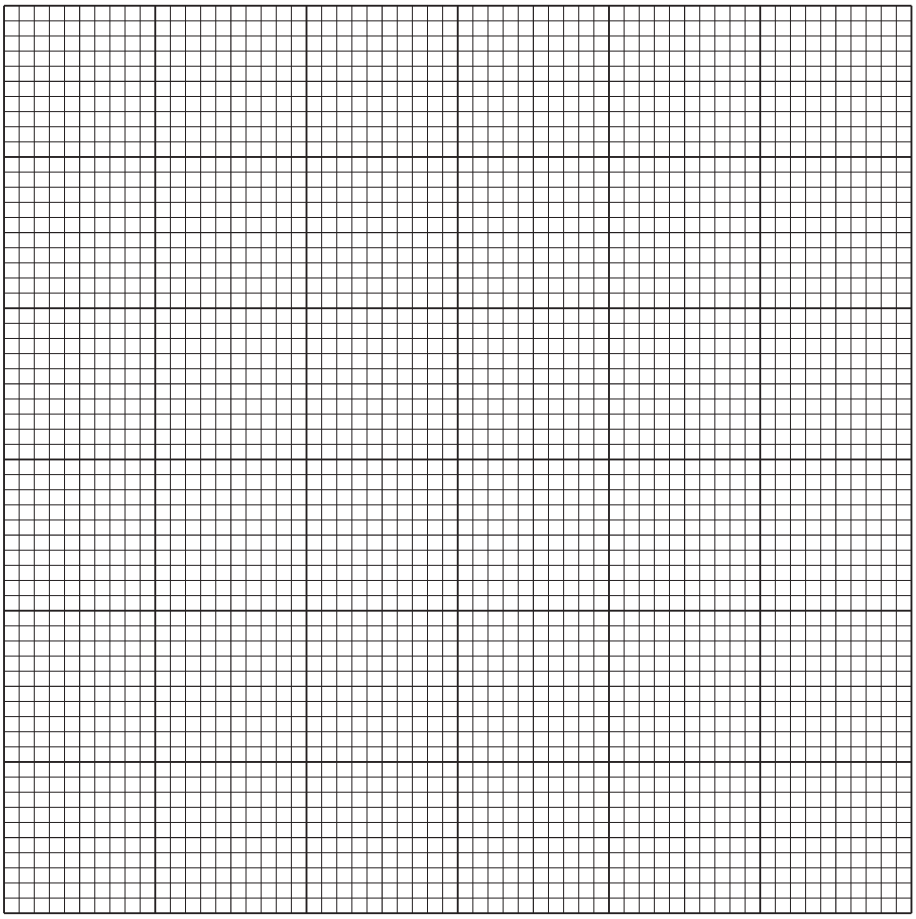

[4]

(ii) Use your graph to estimate the concentration of vitamin C in a sample of cabbage leaves that has been boiled for 20 minutes.

Show on your graph how you obtained your estimate.

..... mg per 100 g
[2]

GradeMax

(iii) Table 2.1 shows that at the start of the investigation 100 g of unboiled cabbage leaves contained 34 mg of vitamin C.

Using the information in Table 2.1, calculate the percentage decrease in the vitamin C content of 100 g of cabbage leaves after boiling for 25 minutes.

Give your answer to **two** significant figures.

Space for working.

..... %
[3]

(c) The students wanted to know if the vitamin C had moved from the cabbage leaves into the water that the leaves were boiled in.

State how the students could test the water for the presence of vitamin C.

Include the result of a positive test.

.....

.....

.....

..... [2]

[Total: 13]

Permission to reproduce items where third-party owned material protected by copyright is included has been sought and cleared where possible. Every reasonable effort has been made by the publisher (UCLES) to trace copyright holders, but if any items requiring clearance have unwittingly been included, the publisher will be pleased to make amends at the earliest possible opportunity.

To avoid the issue of disclosure of answer-related information to candidates, all copyright acknowledgements are reproduced online in the Cambridge Assessment International Education Copyright Acknowledgements Booklet. This is produced for each series of examinations and is freely available to download at www.cambridgeinternational.org after the live examination series.

Cambridge Assessment International Education is part of Cambridge Assessment. Cambridge Assessment is the brand name of the University of Cambridge Local Examinations Syndicate (UCLES), which is a department of the University of Cambridge.

© UCLES 2022