GradeMax

* 0000800000001 * DFD

CAMBRIDGE
International Education

Cambridge IGCSE™

CANDIDATE NAME

CENTRE NUMBER

CANDIDATE NUMBER

* 4 5 8 3 4 8 3 7 5 2 *

BIOLOGY **0610/62**

Paper 6 Alternative to Practical **February/March 2026**

1 hour

You must answer on the question paper.

No additional materials are needed.

INSTRUCTIONS

- Answer **all** questions.
- Use a black or dark blue pen. You may use an HB pencil for any diagrams or graphs.
- Write your name, centre number and candidate number in the boxes at the top of the page.
- Write your answer to each question in the space provided.
- Do **not** use an erasable pen. Do **not** use correction fluid or tape.
- Do **not** write on any bar codes.
- You may use a calculator.
- You should show all your working and use appropriate units.

INFORMATION

- The total mark for this paper is 40.
- The number of marks for each question or part question is shown in brackets [ ].

This document has **12** pages. Any blank pages are indicated.

DC (WW/CB) 355308/5
© Cambridge University Press & Assessment 2026

[Turn over

1 Catalase is an enzyme that catalyses the breakdown of hydrogen peroxide to form water and oxygen. Catalase is found in potato tissue.

The oxygen produced during the breakdown of hydrogen peroxide forms a foam.

The height of the foam can be used as a measure of the activity of the catalase.

A student investigated how the surface area of potato tissue affects the activity of catalase.

The student was provided with three cubes of potato tissue. Each cube was 1 cm × 1 cm × 1 cm in size as shown in Figure 1.1. The total surface area of each cube of potato was 6 cm^2.

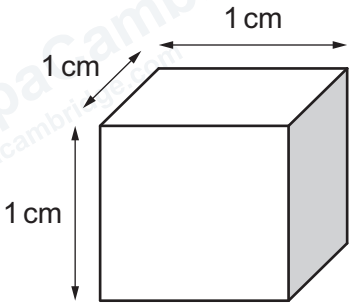

Figure 1.1

The student used this method:

step 1 Label three test-tubes **1**, **2** and **8**.

step 2 Put 10 cm^3 of hydrogen peroxide solution into each of the test-tubes.

step 3 Put one of the cubes of potato into test-tube **1**.

step 4 Put one of the remaining cubes of potato onto the white tile. Use the ruler and scalpel to measure and cut the cube of potato as shown in Figure 1.2. This will make **two** equal-size pieces. The total surface area of the two pieces is 8 cm^2.

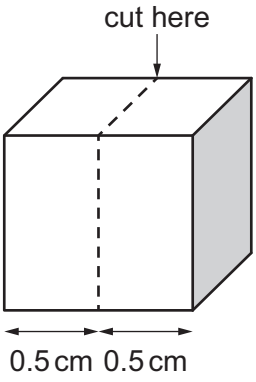

Figure 1.2

step 5 Put both pieces of potato from step 4 into test-tube **2**.

© Cambridge University Press & Assessment 2026

GradeMax

DO NOT WRITE IN THIS MARGIN
DO NOT WRITE IN THIS MARGIN
DO NOT WRITE IN THIS MARGIN
DO NOT WRITE IN THIS MARGIN
DO NOT WRITE IN THIS MARGIN

GradeMax

step 6 Put the remaining cube of potato onto the white tile. Use the ruler and scalpel to measure and cut the cube of potato as shown in Figure 1.3. This will make **eight** equal-size cubes.

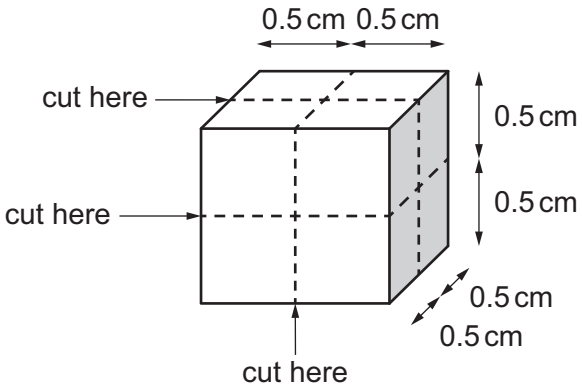

Figure 1.3

(a) (i) Calculate the total surface area of the **eight** cubes of potato made in step 6.

Space for working.

..... cm^2
[2]

step 7 Put the eight cubes of potato into test-tube **8**.

step 8 Start the stop-clock and wait for five minutes.

step 9 After five minutes, place the ruler against the outside of test-tube **1**.

Measure the distance from the top of the liquid to the top of the foam.

Record this measurement in your table in **1(a)(ii)**.

step 10 Repeat step 9 using test-tubes **2** and **8**.

DO NOT WRITE IN THIS MARGIN
DO NOT WRITE IN THIS MARGIN
DO NOT WRITE IN THIS MARGIN
DO NOT WRITE IN THIS MARGIN
DO NOT WRITE IN THIS MARGIN

© Cambridge University Press & Assessment 2026

GradeMax

Figure 1.4 shows the test-tubes at the end of the investigation.

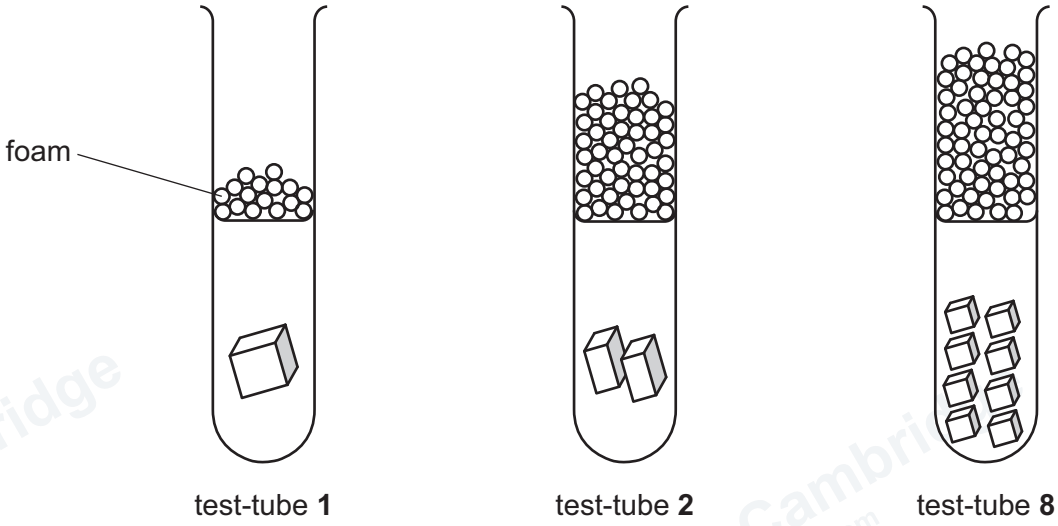

Figure 1.4

(ii) Prepare a table and record the student's results.

[4]

DO NOT WRITE IN THIS MARGIN
DO NOT WRITE IN THIS MARGIN
DO NOT WRITE IN THIS MARGIN
DO NOT WRITE IN THIS MARGIN
DO NOT WRITE IN THIS MARGIN

© Cambridge University Press & Assessment 2026

GradeMax

(iii) State a conclusion for these results.

.....

.....

..... [1]

(iv) State **two** variables that were kept constant in this investigation.

1 .....

2 .....

[2]

(v) Identify **one** safety hazard in this investigation.

.....

.....

..... [1]

(vi) Identify **two** possible sources of error present in this investigation.

Suggest an improvement for **each** of the errors that you have identified.

error 1 .....

.....

.....

improvement 1 .....

.....

.....

error 2 .....

.....

.....

improvement 2 .....

.....

.....

[4]

DO NOT WRITE IN THIS MARGIN

© Cambridge University Press & Assessment 2026

GradeMax

(b) Iodine solution can be used to show that potato tissue contains starch.

State the result of a positive test with iodine solution.

..... [1]

(c) A student investigates the effect of copper sulfate concentration on the activity of catalase in potato tissue.

When small discs of potato are dropped into hydrogen peroxide solution, they sink. The catalase in the potato breaks down the hydrogen peroxide solution producing bubbles of oxygen. The bubbles of oxygen cling to the discs of potato causing the discs of potato to rise back up to the surface of the hydrogen peroxide solution.

The student:

- places small discs of potato in different concentrations of copper sulfate solution and leaves them to soak for 10 minutes
- drops the soaked discs of potato into the hydrogen peroxide solution
- measures the time taken for the discs of potato to reach the surface of the hydrogen peroxide solution.

(i) State the dependent and independent variables in this investigation.

dependent .....

.....

.....

independent .....

.....

.....

[2]

(ii) Suggest a suitable control experiment for this investigation.

.....

.....

..... [1]

DO NOT WRITE IN THIS MARGIN
DO NOT WRITE IN THIS MARGIN
DO NOT WRITE IN THIS MARGIN
DO NOT WRITE IN THIS MARGIN
DO NOT WRITE IN THIS MARGIN

© Cambridge University Press & Assessment 2026

GradeMax

(iii) Table 1.1 shows the results of the investigation.

Table 1.1

concentration of copper sulfate solution / mol per dm^3	time taken for disc of potato to rise / s
0.000	5
0.003	45
0.005	70
0.010	120
0.025	190

On the grid, use the data in Table 1.1 to plot a line graph to show the results of the investigation.

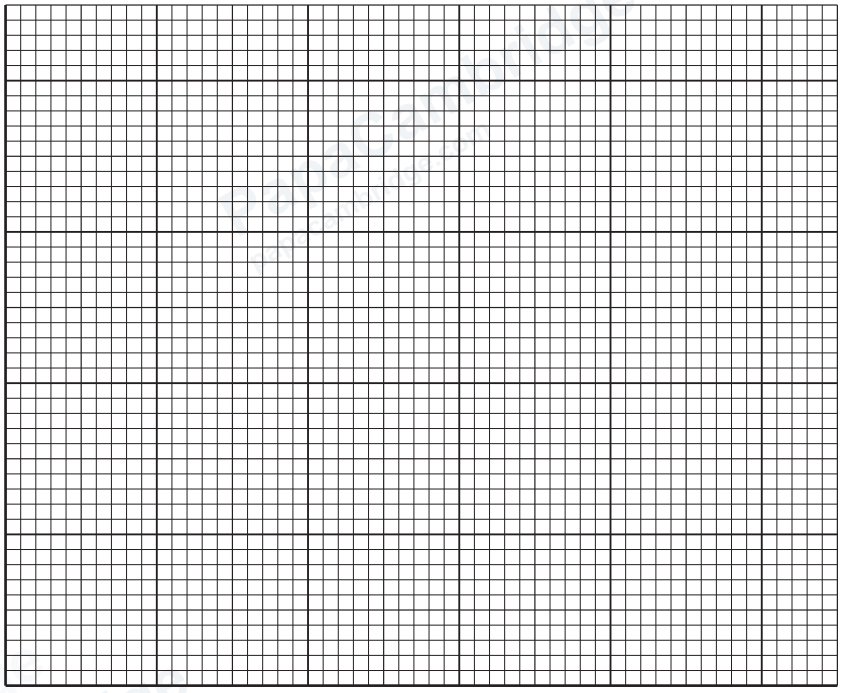

[4]

(iv) Use your graph to estimate the concentration of copper sulfate solution when a disc of potato took 80 s to rise.

On the graph, show how you obtained your estimate.

..... mol per dm^3
[2]

[Total: 24]

DO NOT WRITE IN THIS MARGIN
DO NOT WRITE IN THIS MARGIN
DO NOT WRITE IN THIS MARGIN
DO NOT WRITE IN THIS MARGIN
DO NOT WRITE IN THIS MARGIN

© Cambridge University Press & Assessment 2026

2 **(a)** Figure 2.1 is a photograph of a fruit from a chilli pepper, *Capsicum annuum*. The chilli pepper fruit has been cut in half.

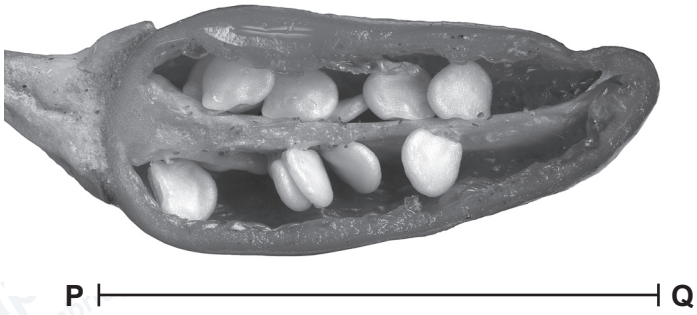

magnification ×1.7

Figure 2.1

(i) Draw a large diagram of the chilli pepper fruit shown in Figure 2.1.

[4]

DO NOT WRITE IN THIS MARGIN
DO NOT WRITE IN THIS MARGIN
DO NOT WRITE IN THIS MARGIN
DO NOT WRITE IN THIS MARGIN
DO NOT WRITE IN THIS MARGIN

© Cambridge University Press & Assessment 2026

(ii) Line **PQ** on Figure 2.1 represents the length of the chilli pepper fruit.

Measure the length of line **PQ** in Figure 2.1.

length of **PQ** ..... mm

Calculate the actual length of the chilli pepper fruit using the formula and your measurement.

$$\text{magnification} = \frac{\text{length of line PQ in Figure 2.1}}{\text{actual length of the chilli pepper fruit}}$$

Give your answer to **three** significant figures.

Space for working.

..... mm
[3]

(b) Chilli pepper fruits contain reducing sugar and non-reducing sugar.

(i) A student tests a sample of chilli pepper fruits with Benedict's solution to show that they contain reducing sugar.

State the result of a positive test.

..... [1]

(ii) The sugar content of chilli pepper fruits increases as the fruits ripen. Scientists have found that the mean sugar content of chilli pepper fruits increases from 19.6 g per kg in unripe chilli pepper fruits to 36.1 g per kg in ripe chilli pepper fruits.

Calculate the percentage increase in the sugar content of ripe chilli pepper fruits.

Give your answer to **two** decimal places.

Space for working.

..... %
[2]

[Total: 10]

DO NOT WRITE IN THIS MARGIN

GradeMax

3 Plan an investigation to determine the effect of wind speed on the rate of transpiration.

.....

.....

.....

.....

.....

.....

.....

.....

.....

.....

.....

.....

..... [6]

DO NOT WRITE IN THIS MARGIN
DO NOT WRITE IN THIS MARGIN
DO NOT WRITE IN THIS MARGIN
DO NOT WRITE IN THIS MARGIN
DO NOT WRITE IN THIS MARGIN

© Cambridge University Press & Assessment 2026

GradeMax

BLANK PAGE

DO NOT WRITE IN THIS MARGIN
DO NOT WRITE IN THIS MARGIN
DO NOT WRITE IN THIS MARGIN
DO NOT WRITE IN THIS MARGIN
DO NOT WRITE IN THIS MARGIN

© Cambridge University Press & Assessment 2026

GradeMax

BLANK PAGE

DO NOT WRITE IN THIS MARGIN
DO NOT WRITE IN THIS MARGIN
DO NOT WRITE IN THIS MARGIN
DO NOT WRITE IN THIS MARGIN
DO NOT WRITE IN THIS MARGIN

Permission to reproduce items where third-party owned material protected by copyright is included has been sought and cleared where possible. Every reasonable effort has been made by the publisher (Cambridge University Press & Assessment) to trace copyright holders, but if any items requiring clearance have unwittingly been included, the publisher will be pleased to make amends at the earliest possible opportunity.

To avoid the issue of disclosure of answer-related information to candidates, all copyright acknowledgements are reproduced online in our Copyright Acknowledgements Booklet. This is produced for each series of examinations and is freely available to download at www.cambridgeinternational.org after the live examination series.

Cambridge International Education is the name of our awarding body and a part of Cambridge University Press & Assessment, which is a department of the University of Cambridge.

© Cambridge University Press & Assessment 2026