GradeMax

* 0000800000001 * DFD

CAMBRIDGE
International Education

Cambridge IGCSE™

CANDIDATE NAME

CENTRE NUMBER

CANDIDATE NUMBER

* 2 4 9 5 7 9 6 3 2 1 *

BIOLOGY **0610/62**

Paper 6 Alternative to Practical **May/June 2026**

1 hour

You must answer on the question paper.

No additional materials are needed.

INSTRUCTIONS

- Answer **all** questions.
- Use a black or dark blue pen. You may use an HB pencil for any diagrams or graphs.
- Write your name, centre number and candidate number in the boxes at the top of the page.
- Write your answer to each question in the space provided.
- Do **not** use an erasable pen. Do **not** use correction fluid or tape.
- Do **not** write on any bar codes.
- You may use a calculator.
- You should show all your working and use appropriate units.

INFORMATION

- The total mark for this paper is 40.
- The number of marks for each question or part question is shown in brackets [ ].

PapaCambridge papacambridge.com

This document has **12** pages. Any blank pages are indicated.

DC (WW/SG) 357345/5
© Cambridge University Press & Assessment 2026

[Turn over

GradeMax

BLANK PAGE

DO NOT WRITE IN THIS MARGIN
DO NOT WRITE IN THIS MARGIN
DO NOT WRITE IN THIS MARGIN
DO NOT WRITE IN THIS MARGIN
DO NOT WRITE IN THIS MARGIN

© Cambridge University Press & Assessment 2026

GradeMax

DO NOT WRITE IN THIS MARGIN
DO NOT WRITE IN THIS MARGIN
DO NOT WRITE IN THIS MARGIN
DO NOT WRITE IN THIS MARGIN
DO NOT WRITE IN THIS MARGIN

1 A student estimated the concentration of vitamin C in a drink by comparing it to solutions with known vitamin C concentrations.

The concentration of vitamin C in a sample can be estimated by testing it with iodine solution. The test is done by adding drops of iodine solution to the sample until the colour remains blue-black. The greater the volume of iodine solution added, the higher the concentration of vitamin C in the sample.

(a) The student used this method:

step 1 Label three beakers **V1**, **V2** and **V3**.

step 2 Use the volumes of 0.6% vitamin C solution **V** and distilled water **W** shown in Table 1.1 to make up the different concentrations of vitamin C solution.

(i) Complete Table 1.1 by writing in the final percentage concentration of vitamin C solution in test-tube **V3**.

Table 1.1

beaker	volume of 0.6% vitamin C solution V / cm^3	volume of distilled water W / cm^3	final percentage concentration of vitamin C solution
V1	12	0	0.6
V2	8	4	0.4
V3	4	8	.....

[1]

step 3 Label three test-tubes **V1**, **V2** and **V3**.

step 4 Use a 1 cm^3 syringe to put 1 cm^3 of starch suspension into each test-tube.

step 5 Add 1 cm^3 of the vitamin C solution from beaker **V1** to test-tube **V1**.

step 6 Add 1 cm^3 of the vitamin C solution from beaker **V2** to test-tube **V2**.

step 7 Add 1 cm^3 of the vitamin C solution from beaker **V3** to test-tube **V3**.

step 8 Fill a clean 5 cm^3 syringe with 5 cm^3 of iodine solution.

step 9 Use the syringe to add a drop of iodine solution to test-tube **V1** and shake gently to mix.

step 10 Continue adding drops of iodine solution and shaking until the mixture remains a blue-black colour.

step 11 Record the volume of iodine solution remaining in the syringe.

step 12 Repeat step 8 to step 11 using test-tube **V2** and test-tube **V3**.

© Cambridge University Press & Assessment 2026

Figure 1.1 shows the volume of iodine solution **remaining** in the syringes used for test-tubes **V1**, **V2** and **V3**. The grey shading in the syringes represents the iodine solution.

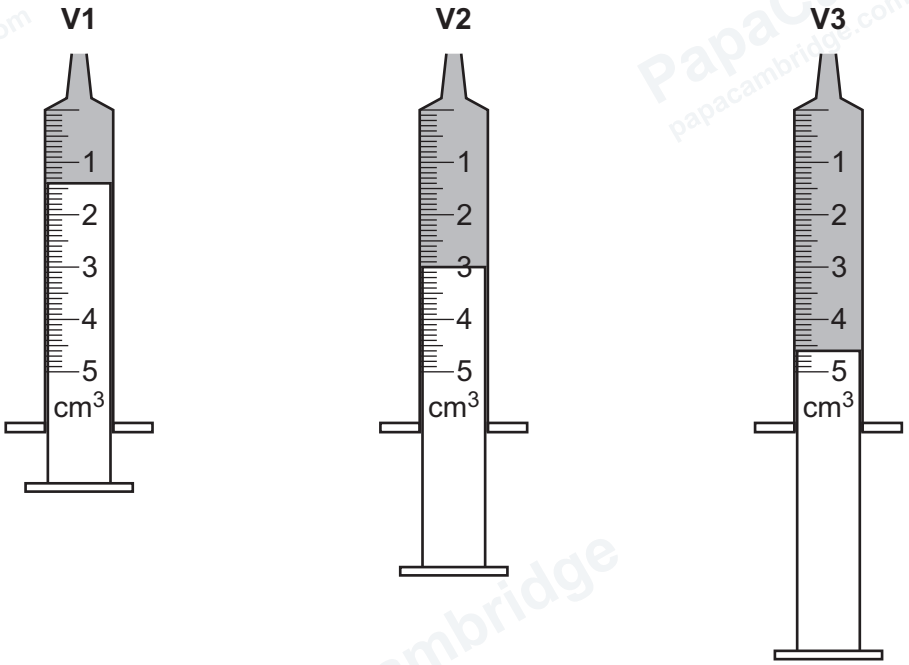

Figure 1.1

(ii) Prepare a table and record the results shown in Figure 1.1.

Include the final percentage concentrations of the vitamin C solutions in your table.

[3]

© Cambridge University Press & Assessment 2026

GradeMax

DO NOT WRITE IN THIS MARGIN
DO NOT WRITE IN THIS MARGIN
DO NOT WRITE IN THIS MARGIN
DO NOT WRITE IN THIS MARGIN
DO NOT WRITE IN THIS MARGIN

GradeMax

(iii) Calculate the volume of iodine solution **added** to each test-tube.

Use the formula shown:

volume of iodine solution added = 5.0 – the volume remaining in the syringe

test-tube **V1** ..... cm^3

test-tube **V2** ..... cm^3

test-tube **V3** ..... cm^3

[1]

(iv) State the dependent variable in this investigation.

..... [1]

(v) Explain why a blue-black colour was seen when iodine solution was added to the test-tubes.

.....

.....

..... [1]

(vi) The student used the same syringe to add the vitamin C solution in step 5, step 6 and step 7.

Suggest what effect this would have on the volume of iodine solution required for the mixture in test-tube **V3** to remain blue-black.

.....

.....

..... [1]

(vii) Another student repeated the investigation but counted the number of drops of iodine solution added instead of measuring the volume.

Suggest why measuring volume is more accurate than counting drops.

.....

.....

..... [1]

DO NOT WRITE IN THIS MARGIN

© Cambridge University Press & Assessment 2026

GradeMax

(b) The student estimated the vitamin C concentration in drink **D**.

The student used this method:

step 13 Label a test-tube **D**.

step 14 Put 1 cm^3 of starch suspension into the test-tube.

step 15 Add 1 cm^3 of drink **D** to the test-tube.

step 16 Fill a clean syringe with 5 cm^3 of iodine solution.

step 17 Use the syringe to add a drop of iodine solution to test-tube **D** and shake gently to mix.

step 18 Continue adding drops of iodine solution and shaking until the mixture remains a blue-black colour. Record the volume of iodine solution added.

step 19 Repeat step 13 to step 18 two more times.

(i) Table 1.2 shows the volumes of iodine solution the student recorded in step 18 and step 19.

Table 1.2

volume of iodine solution added to drink D / cm^3
2.8
2.9
2.7

Calculate the mean volume of iodine solution **added** to drink **D**.

mean volume of iodine solution added to drink **D** ..... cm^3 [1]

(ii) Use your answers in **1(a)(iii)** and **1(b)(i)** to estimate the vitamin C concentration in drink **D**.

estimated vitamin C concentration in drink **D** .....% [1]

(iii) Describe one modification to the procedure in **1(a)** that would allow you to have more confidence in your estimate in **1(b)(ii)**.

.....

.....

..... [1]

© Cambridge University Press & Assessment 2026

DO NOT WRITE IN THIS MARGIN DO NOT WRITE IN THIS MARGIN DO NOT WRITE IN THIS MARGIN DO NOT WRITE IN THIS MARGIN DO NOT WRITE IN THIS MARGIN

GradeMax

(iv) The manufacturer of a drink claims that it does **not** contain reducing sugars.

Describe a test that would confirm the presence of reducing sugars.

.....

.....

.....

.....

..... [2]

(v) State **one** other test that could be used to determine the presence of vitamin C.

..... [1]

DO NOT WRITE IN THIS MARGIN
DO NOT WRITE IN THIS MARGIN
DO NOT WRITE IN THIS MARGIN
DO NOT WRITE IN THIS MARGIN
DO NOT WRITE IN THIS MARGIN

PapaCambridge
papacambridge.com

(c) Kiwi fruit is a good source of vitamin C. Fresh kiwi fruit has a high water content which can be reduced by drying the fruit.

A student investigated the effect of drying time on the vitamin C concentration of kiwi fruit.

The student dried the fruits in an oven and tested samples for vitamin C at regular intervals.

The results are shown in Table 1.3.

Table 1.3

drying time / hours	vitamin C concentration / mg per 100 g of kiwi fruit
0	90
4	125
8	185
12	230
16	230

(i) Plot a line graph on the grid of the data in Table 1.3.

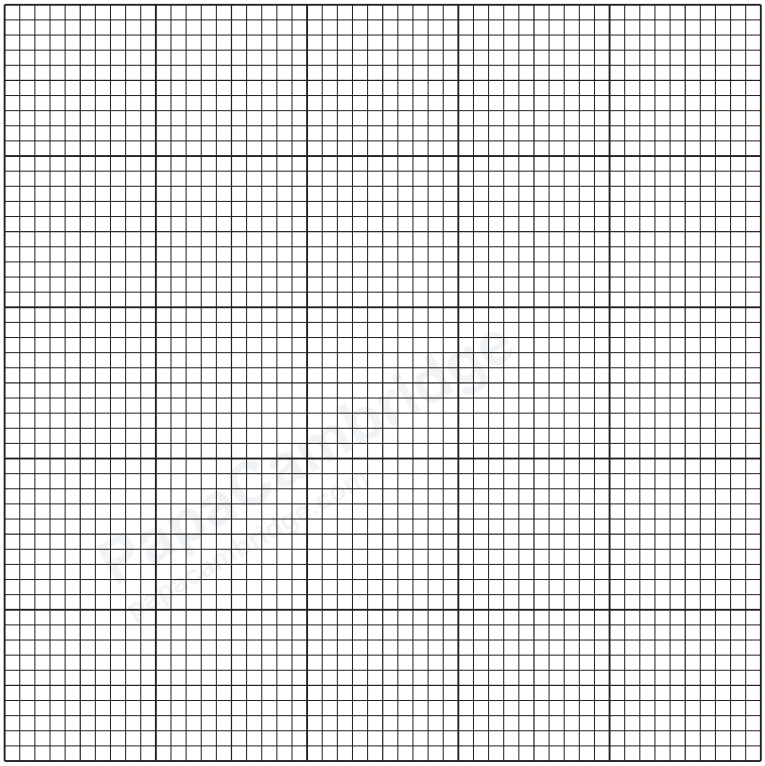

[4]

© Cambridge University Press & Assessment 2026

DO NOT WRITE IN THIS MARGIN
DO NOT WRITE IN THIS MARGIN
DO NOT WRITE IN THIS MARGIN
DO NOT WRITE IN THIS MARGIN
DO NOT WRITE IN THIS MARGIN

GradeMax

(ii) Describe **and** explain the change in the vitamin C concentration in the kiwi fruit in Table 1.3.

.....

.....

.....

.....

..... [2]

(iii) Use your graph to estimate the vitamin C concentration in kiwi fruit that has been dried for 10 hours.

Indicate **on your** graph how you obtained your answer.

..... mg per 100 g of kiwi fruit [2]

[Total: 23]

DO NOT WRITE IN THIS MARGIN
DO NOT WRITE IN THIS MARGIN
DO NOT WRITE IN THIS MARGIN
DO NOT WRITE IN THIS MARGIN
DO NOT WRITE IN THIS MARGIN

© Cambridge University Press & Assessment 2026

GradeMax

2 **(a)** Figure 2.1 is a photograph of three beans in a pod.



Figure 2.1

(i) Draw a large diagram of the three beans and the pod shown in Figure 2.1.

[4]

© Cambridge University Press & Assessment 2026

DO NOT WRITE IN THIS MARGIN
DO NOT WRITE IN THIS MARGIN
DO NOT WRITE IN THIS MARGIN
DO NOT WRITE IN THIS MARGIN
DO NOT WRITE IN THIS MARGIN

GradeMax

(ii) Line **PQ** represents the length of one of the beans in Figure 2.1.

Measure the length of line **PQ**.

length of line **PQ** ..... mm

The actual length of the bean is 19 mm.

Using your measurement and the formula, calculate the magnification of the bean in Figure 2.1.

$$\text{magnification} = \frac{\text{length of line PQ}}{\text{actual length of the bean}}$$

Give your answer to **two** significant figures.

Space for working.

.....
[3]

(b) A student investigated the effect of temperature on the time taken for beans to germinate.

The student:

- planted 200 beans in trays containing soil, and kept them at 10 °C
- added 45 cm^3 of water to the trays each day
- recorded the time when each bean started to germinate
- calculated the mean time for germination
- repeated the procedure at 20 °C, 30 °C, 40 °C and 50 °C.

(i) Identify the independent variable in this investigation.

..... [1]

(ii) Identify **one** variable that was kept constant in this investigation.

..... [1]

(iii) Suggest why the student planted so many beans.

.....

.....

..... [1]

(iv) State the most appropriate piece of apparatus for measuring 45 cm^3 of water.

..... [1]

© Cambridge University Press & Assessment 2026

DO NOT WRITE IN THIS MARGIN
DO NOT WRITE IN THIS MARGIN
DO NOT WRITE IN THIS MARGIN
DO NOT WRITE IN THIS MARGIN
DO NOT WRITE IN THIS MARGIN

GradeMax

(c) Beans contain the enzyme catalase. The age of a bean could affect the concentration of catalase it contains.

Catalase catalyses the breakdown of hydrogen peroxide to release water and oxygen gas.

Plan an investigation to determine if the age of the beans affects the **volume** of oxygen gas produced by this reaction.

.....

.....

.....

.....

.....

.....

.....

.....

.....

.....

.....

.....

..... [6]

[Total: 17]

DO NOT WRITE IN THIS MARGIN

DO NOT WRITE IN THIS MARGIN

DO NOT WRITE IN THIS MARGIN

DO NOT WRITE IN THIS MARGIN

DO NOT WRITE IN THIS MARGIN

Permission to reproduce items where third-party owned material protected by copyright is included has been sought and cleared where possible. Every reasonable effort has been made by the publisher (Cambridge University Press & Assessment) to trace copyright holders, but if any items requiring clearance have unwittingly been included, the publisher will be pleased to make amends at the earliest possible opportunity.

To avoid the issue of disclosure of answer-related information to candidates, all copyright acknowledgements are reproduced online in our Copyright Acknowledgements Booklet. This is produced for each series of examinations and is freely available to download at www.cambridgeinternational.org after the live examination series.

Cambridge International Education is the name of our awarding body and a part of Cambridge University Press & Assessment, which is a department of the University of Cambridge.

© Cambridge University Press & Assessment 2026