GradeMax

Cambridge IGCSE

Cambridge Assessment International Education
Cambridge International General Certificate of Secondary Education

CANDIDATE NAME

CENTRE NUMBER

CANDIDATE NUMBER

GEOGRAPHY **0460/12**

Paper 1 **May/June 2019**

1 hour 45 minutes

Candidates answer on the Question Paper.

Additional Materials: Ruler
Calculator

READ THESE INSTRUCTIONS FIRST

Write your centre number, candidate number and name in the spaces provided.
Write in dark blue or black pen.
You may use an HB pencil for any diagrams or graphs.
Do not use staples, paper clips, glue or correction fluid.
DO **NOT** WRITE IN ANY BARCODES.

Write your answer to each question in the space provided.
If additional space is required, you should use the lined pages at the end of this booklet. The question number(s) must be clearly shown.

Answer **three** questions, **one** from each section.

The Insert contains Figs. 3.1 and 3.2 for Question 3, Fig. 4.1 for Question 4, Figs. 5.2 and 5.3 for Question 5, and Fig. 6.1 for Question 6.
The Insert is **not** required by the Examiner.
Sketch maps and diagrams should be drawn whenever they serve to illustrate an answer.

At the end of the examination, fasten all your work securely together.
The number of marks is given in brackets [ ] at the end of each question or part question.

Definitions
MEDCs – More Economically Developed Countries
LEDCs – Less Economically Developed Countries

This syllabus is regulated for use in England, Wales and Northern Ireland as a Cambridge International Level 1/Level 2 Certificate.

This document consists of **27** printed pages, **1** blank page and **1** Insert.

DC (NH/TP) 162373/4
© UCLES 2019

Cambridge Assessment International Education

Section A

Answer **one** question from this section.

1 **(a)** Study Fig. 1.1, which shows information about population growth in the UK.

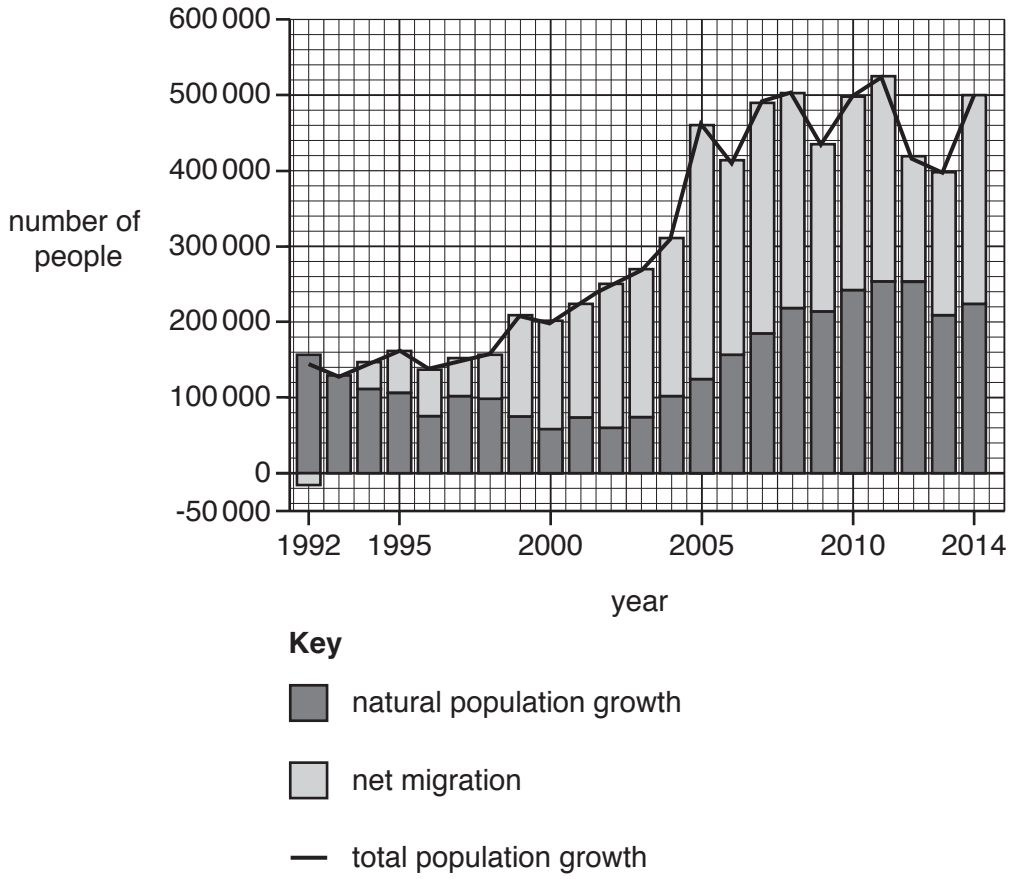

Fig. 1.1

(i) What was the total population growth in the UK in 2014?

..... [1]

(ii) What is meant by the following terms:

– natural population growth

.....

.....

– net migration?

.....

.....[2]

GradeMax

(iii) Identify from Fig. 1.1 a year when:

– net migration was greater than natural population growth .....

– there were more emigrants than immigrants .....

– the largest total population growth occurred. ..... [3]

(iv) Explain why there are low rates of natural population growth in MEDCs such as the UK.

.....

.....

.....

.....

.....

.....

.....

.....[4]

© UCLES 2019

[Turn over

GradeMax

(b) Study Fig. 1.2, which shows information about population growth in Africa and Europe from 1800 to 2100 (estimated).

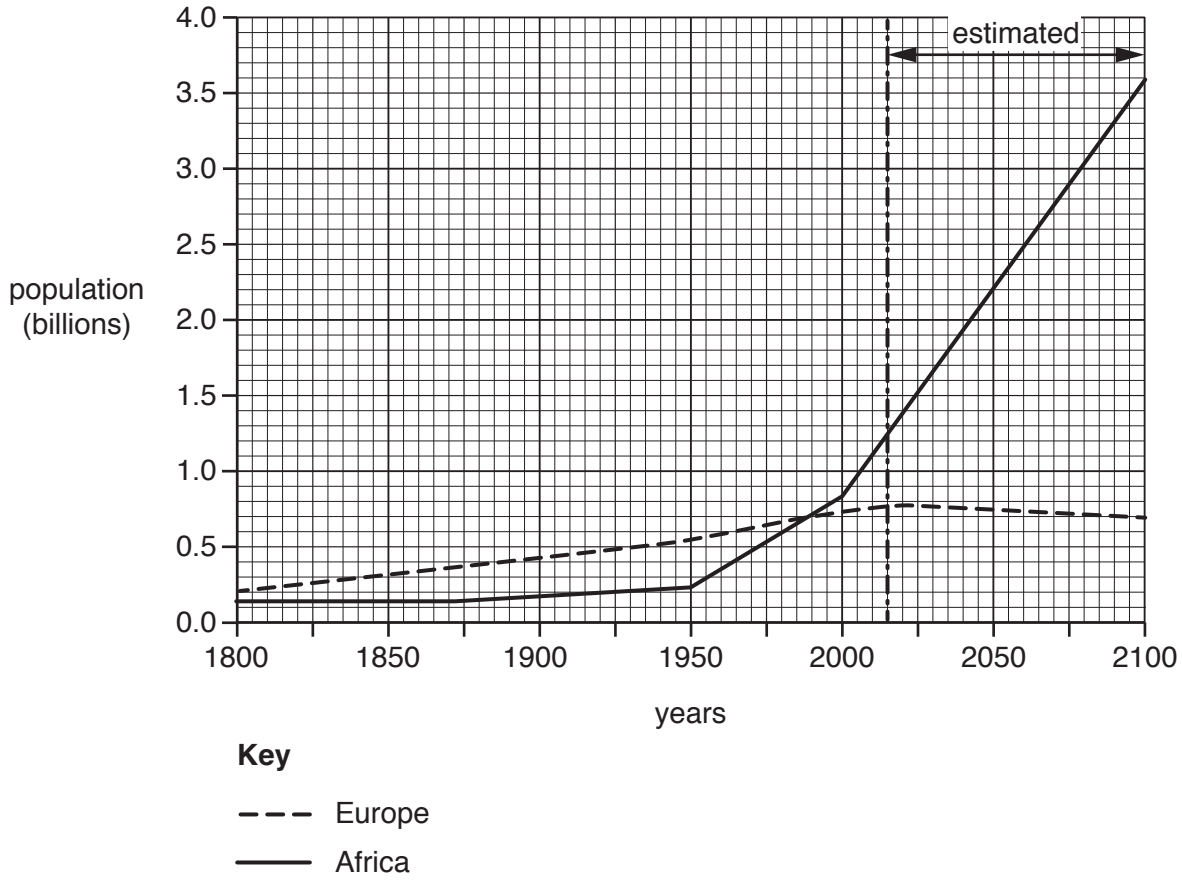

Fig. 1.2

(i) Compare population growth in Africa and Europe between 1800 and 2100 (estimated). You should refer to years and use statistics in your answer.

.....

.....

.....

.....

.....

.....[3]

© UCLES 2019

GradeMax

(ii) Suggest problems which are likely to occur in Africa as a result of its population growth.

.....

.....

.....

.....

.....

.....

.....

.....

.....

.....[5]

GradeMax

(c) For a named country you have studied, describe a population policy which has been used to influence its population growth. Comment on how successful this policy was.

Name of country .....

.....

.....

.

2 **(a)** Study Fig. 2.1, which shows information about a settlement hierarchy.

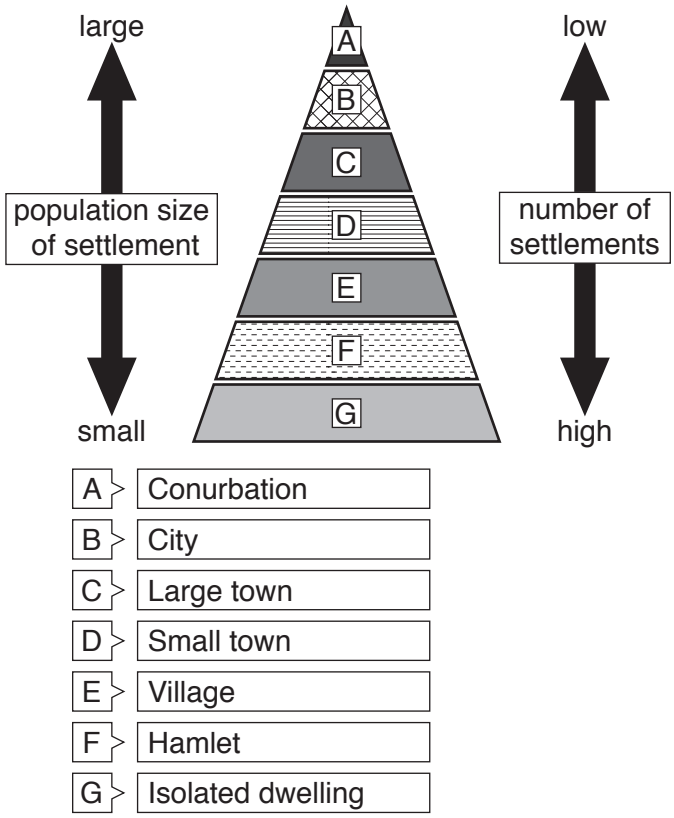

Fig. 2.1

(i) Tick the **one** statement which best describes a settlement hierarchy.

	Tick ✓
An area with large numbers of shops and services	
A method of arranging settlements based on the size of their population	
A diagram to show service provision in the settlements in an area	
The area served by a settlement and its services	

[1]

(ii) Using evidence from Fig. 2.1 **only**, describe the relationship between population size and number of settlements. Give examples of settlement types from Fig. 2.1 in your answer.

.....

.....

.....

.....[2]

© UCLES 2019

GradeMax

(iii) Give **three** examples of high order services which are likely to be located in large cities, such as capital cities.

1 .....

2 .....

3 .....[3]

(iv) Explain why large cities, such as capital cities, have many high order services.

.....

.....

.....

.....

.....

.....

.....

.....[4]

© UCLES 2019

GradeMax

(b) Study Fig. 2.2, which gives information about rural decline.

Rural life in decline

Nearly half of rural settlements in the UK have seen the closure of local services in the past four years.

Villages across the country are losing basic services such as post offices, doctors' surgeries, shops and schools.

A study found that residents of the village of Wrotham, in Kent, suffered the greatest loss of services. The study also found that 233 000 people in the country are living in areas with no post office within 2 kilometres and no bank or cashpoint (ATM) within 4 kilometres.

Fig. 2.2

(i) Using Fig. 2.2 **only**, give **three** examples of services which are being closed in rural settlements.

1 .....

2 .....

3 .....[3]

(ii) Explain why service provision in some rural areas is declining.

.....

.....

.....

.....

.....

.....

.....

.....

.....

.....[5]

© UCLES 2019

[Turn over

GradeMax

(c) Name a settlement you have studied. Describe and explain its functions.

Name of settlement .....

.....

.....

.

GradeMax

Section B

Answer **one** question from this section.

3 **(a)** Study Fig. 3.1 (Insert), which is a photograph of a river feature.

(i) Identify the type of river feature shown on Fig. 3.1.

Choose from the words below:

confluence meander mouth source

..... [1]

(ii) Describe **two** characteristics of the rivers shown on Fig. 3.1.

1 .....

.....

2 .....

.....[2]

(iii) Explain why erosion is likely to be the main process in the rivers shown in Fig. 3.1.

.....

.....

.....

.....

.....

.....[3]

(iv) Suggest how the river **and** its valley will change further downstream from the area shown in Fig. 3.1.

.....

.....

.....

.....

.....

.....

.....

.....[4]

© UCLES 2019

[Turn over

GradeMax

(b) Study Fig. 3.2 (Insert), which is a photograph of a waterfall.

(i) Describe **three** features of the waterfall shown in Fig. 3.2.

1 .....

.....

2 .....

.....

3 .....

.....[3]

(ii) Explain how a waterfall is formed on a river. You may use a labelled diagram or diagrams.

.....

.....

.....

.....

.....

.....

.....

.....

[5]

© UCLES 2019

GradeMax

(c) For a named river you have studied, explain the causes of flooding.

Named river .....

.....

.....

.

GradeMax

4 **(a)** Study Fig. 4.1 (Insert), which is a map which shows the Pacific Ring of Fire.

(i) Explain why the shaded area is known as the Pacific *Ring of Fire*.

.....

.....[1]

(ii) Compare the location of Mauna Loa and Ruapehu volcanoes.

.....

.....

.....

.....[2]

(iii) Explain why there are active volcanoes on converging plate boundaries.

.....

.....

.....

.....

.....

.....[3]

© UCLES 2019

(b) Study Fig. 4.2, which is a diagram showing the number of earthquakes occurring on Mauna Loa between 2010 and 2015.

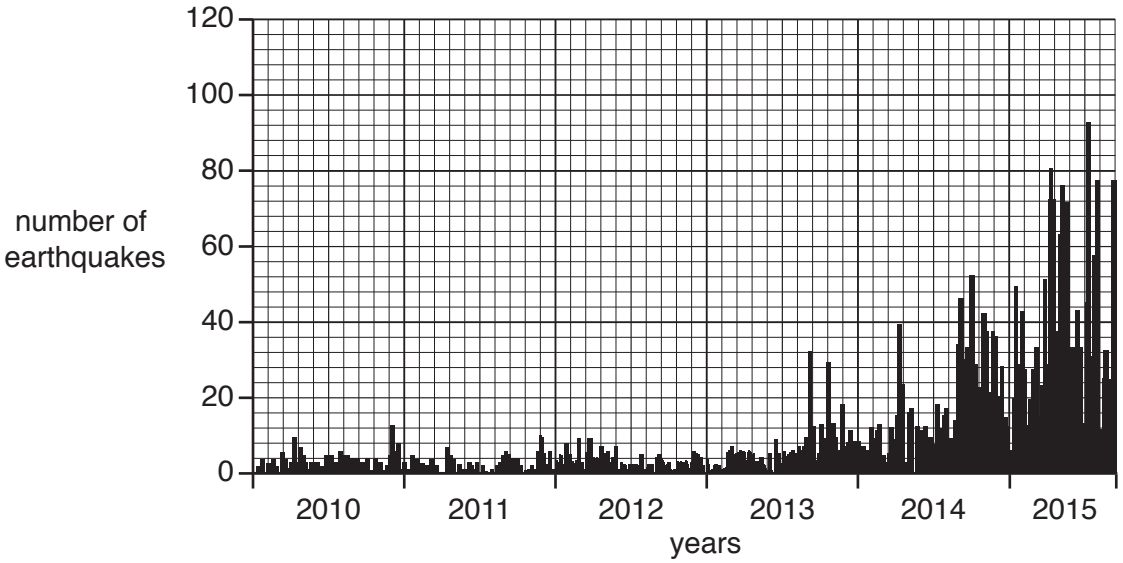

Fig. 4.2

(i) Using Fig. 4.2 **only**, describe the changes in the number of earthquakes on Mauna Loa between 2010 and 2015.

.....

.....

.....

.....

.....

.....[3]

(ii) Monitoring is one way to reduce the impacts of earthquakes and volcanoes.
Describe other ways to reduce the impacts of earthquakes and volcanoes on people.

.....

.....

.....

.....

.....

.....

.....

.....[4]

© UCLES 2019

GradeMax

(iii) Explain why earthquakes and volcanoes cause more deaths and injuries in LEDCs than MEDCs.

.....

.....

.....

.....

.....

.....

.....

.....

.....

.....[5]

© UCLES 2019

GradeMax

(c) For a named example you have studied, explain why people live close to an active volcano.

Name of example .....

.....

.....

.

GradeMax

Section C

Answer **one** question from this section.

5 **(a)** Study Fig. 5.1, which shows two traditional methods of irrigation used by subsistence farmers.

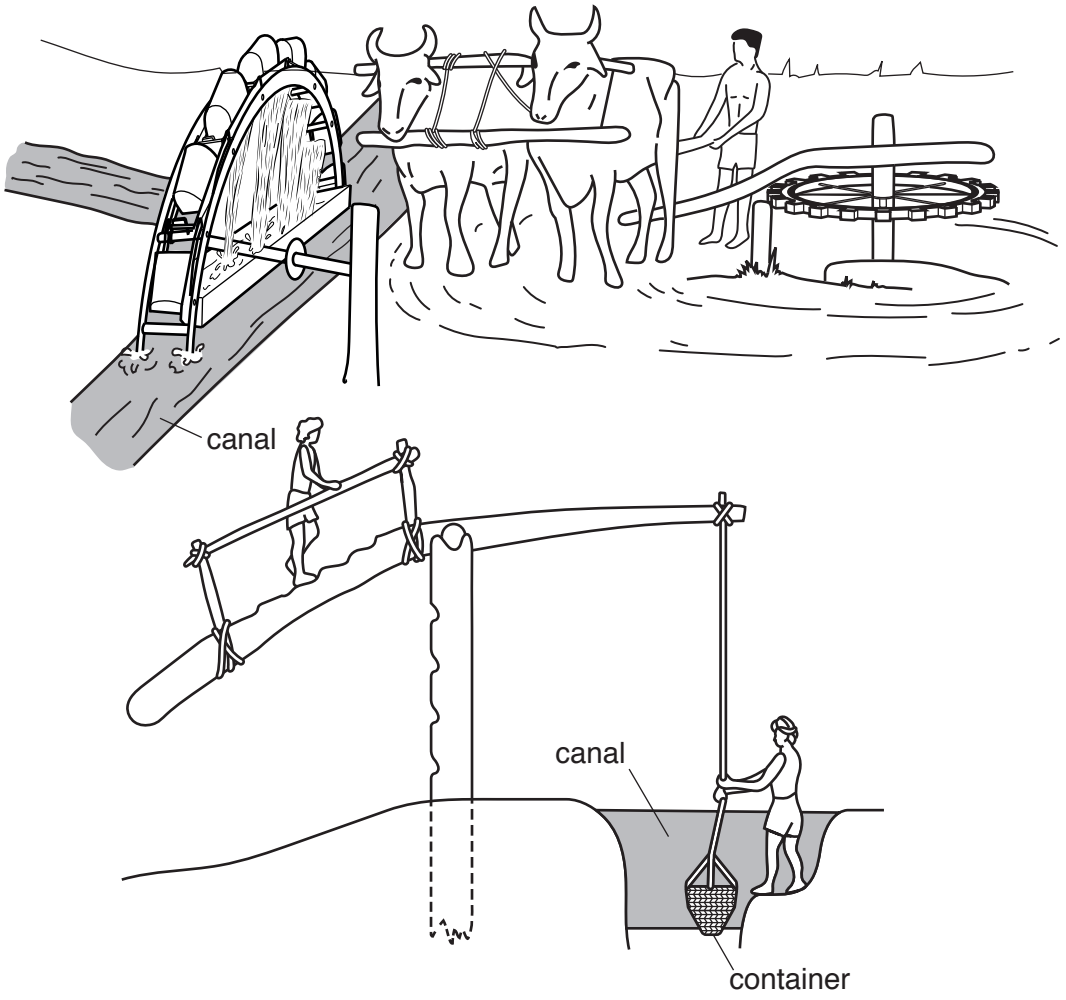

Fig. 5.1

(i) What is meant by a *subsistence farmer*?

.....

.....[1]

(ii) Explain why irrigation increases the yield of crops.

.....

.....

.....

.....[2]

© UCLES 2019

GradeMax

(iii) Explain why the methods of irrigation shown in Fig. 5.1 are suitable to use in LEDCs.

.....

.....

.....

.....

.....

.....[3]

(iv) Describe **four** other methods which farmers can use to increase the yield of crops.

1 .....

.....

2 .....

.....

3 .....

.....

4 .....

.....[4]

© UCLES 2019

[Turn over

GradeMax

(b) Study Figs. 5.2 and 5.3 (Insert), which are photographs taken on a mixed farm.

(i) State **three** processes which will take place on the mixed farm shown in Figs. 5.2 and 5.3.

1 .....

.....

2 .....

.....

3 .....

.....[3]

(ii) Describe the advantages of mixed farming.

.....

.....

.....

.....

.....

.....

.....

.....

.....

.....[5]

© UCLES 2019

GradeMax

(c) For a named country or region you have studied, explain why there have been food shortages.

Name of country or region .....

.....

.....

.....

.....

.....

.....

.....

.....

.....

.....

.....

.....

.....

.....

.....

.....

.....

.....

.....

.....

.....

.....

.....

.....

.....[7]

[Total: 25]

GradeMax

6 **(a)** Study Fig. 6.1 (Insert), which shows information about sources of electricity in Mexico (an LEDC).

(i) State the number of nuclear power stations in Mexico.

..... [1]

(ii) Using Fig. 6.1 **only**, name **one** renewable and **one** non-renewable source of electricity in Mexico.

– renewable .....

– non-renewable .....[2]

(iii) Compare the importance of different sources of electricity in the states of Sonora and Sinaloa.

.....

.....

.....

.....

.....

.....[3]

(iv) Suggest reasons why some parts of Mexico are able to generate large amounts of electricity from hydro-electric power (HEP).

.....

.....

.....

.....

.....

.....

.....

.....

.....[4]

© UCLES 2019

GradeMax

(b) Study Fig. 6.2, which shows information about natural gas pipelines in Mexico.

Mexico's natural gas pipelines



Key

Northwest pipeline
Topolobampo–El Encino pipeline
Chihuahua pipeline
Existing pipelines
Los Ramones pipeline

Fig. 6.2

(i) Name and describe the route of any one natural gas pipeline between the USA and Mexico.

Name .....

Description of route .....

.....

.....

.....

.....[3]

GradeMax

(ii) Mexico imports large amounts of natural gas from the USA.
Explain why relying on imports of natural gas could cause problems for Mexico.

.....

.....

.....

.....

.....

.....

.....

.....

.....

.....[5]

© UCLES 2019

GradeMax

(c) Name and state the location of a type of economic activity you have studied.
Explain how the economic activity may cause the natural environment to be at risk.

Type of economic activity .....

Location .....

How the economic activity may cause the natural environment to be at risk.

.....

.....

.....

.....

.....

.....

.....

.....

.....

.....

.....

.....

.....

.....

.....

.....

.....

.....

.....

.....

.....

.....

.....

.....[7]

[Total: 25]

© UCLES 2019

GradeMax

Additional Pages

If you use the following lined pages to complete the answer(s) to any question(s), the question number(s) must be clearly shown.

© UCLES 2019

GradeMax

BLANK PAGE

Permission to reproduce items where third-party owned material protected by copyright is included has been sought and cleared where possible. Every reasonable effort has been made by the publisher (UCLES) to trace copyright holders, but if any items requiring clearance have unwittingly been included, the publisher will be pleased to make amends at the earliest possible opportunity.

To avoid the issue of disclosure of answer-related information to candidates, all copyright acknowledgements are reproduced online in the Cambridge Assessment International Education Copyright Acknowledgements Booklet. This is produced for each series of examinations and is freely available to download at www.cambridgeinternational.org after the live examination series.

Cambridge Assessment International Education is part of the Cambridge Assessment Group. Cambridge Assessment is the brand name of the University of Cambridge Local Examinations Syndicate (UCLES), which itself is a department of the University of Cambridge.

© UCLES 2019