GradeMax

* 0000800000001 *





Cambridge Assessment International Education

Cambridge IGCSE™

CANDIDATE NAME

CENTRE NUMBER

CANDIDATE NUMBER

8619606112

CAMBRIDGE INTERNATIONAL MATHEMATICS **0607/32**

Paper 3 Calculator (Core) **February/March 2025**

1 hour 15 minutes

You must answer on the question paper.

You will need: Geometrical instruments

INSTRUCTIONS

- Answer **all** questions.
- Use a black or dark blue pen. You may use an HB pencil for any diagrams or graphs.
- Write your name, centre number and candidate number in the boxes at the top of the page.
- Write your answer to each question in the space provided.
- Do **not** use an erasable pen or correction fluid.
- Do **not** write on any bar codes.
- You should use a graphic display calculator where appropriate.
- You may use tracing paper.
- You must show all necessary working clearly. You will be given marks for correct methods, including sketches, even if your answer is incorrect.
- Give non-exact numerical answers correct to 3 significant figures, or 1 decimal place for angles in degrees, unless a different level of accuracy is specified in the question.
- For π, use either your calculator value or 3.142.

INFORMATION

- The total mark for this paper is 60.
- The number of marks for each question or part question is shown in brackets [ ].

This document has **12** pages. Any blank pages are indicated.

DC (DE/CB) 341822/3
© UCLES 2025

[Turn over

GradeMax

List of formulas

Area, A, of triangle, base b, height h.	$A = \frac{1}{2}bh$
Area, A, of circle of radius r.	$A = \pi r^2$
Circumference, C, of circle of radius r.	$C = 2\pi r$
Curved surface area, A, of cylinder of radius r, height h.	$A = 2\pi rh$
Curved surface area, A, of cone of radius r, sloping edge l.	$A = \pi rl$
Surface area, A, of sphere of radius r.	$A = 4\pi r^2$
Volume, V, of prism, cross-sectional area A, length l.	$V = Al$
Volume, V, of pyramid, base area A, height h.	$V = \frac{1}{3}Ah$
Volume, V, of cylinder of radius r, height h.	$V = \pi r^2 h$
Volume, V, of cone of radius r, height h.	$V = \frac{1}{3}\pi r^2 h$
Volume, V, of sphere of radius r.	$V = \frac{4}{3}\pi r^3$

DO NOT WRITE IN THIS MARGIN
DO NOT WRITE IN THIS MARGIN
DO NOT WRITE IN THIS MARGIN
DO NOT WRITE IN THIS MARGIN
DO NOT WRITE IN THIS MARGIN

* 0000800000003 *

1 One can of lemonade costs 65 cents.
Larkin buys 7 cans of lemonade.

Work out how much change Larkin gets from $5.

$ ..... [2]

2 Work out $\frac{6.23+5.84}{3.61-1.87}$.

..... [1]

3 $x-y+2z=4.1$

Work out the value of x when $y=2.5$ and $z=1.6$.

$x=$ ..... [2]

4 Convert 5000 centimetres to metres.

..... m [1]

DO NOT WRITE IN THIS MARGIN
DO NOT WRITE IN THIS MARGIN
DO NOT WRITE IN THIS MARGIN
DO NOT WRITE IN THIS MARGIN
DO NOT WRITE IN THIS MARGIN

GradeMax

5 These are the masses, in kg, of each of 11 kangaroos.

66, 72, 90, 85, 91, 78, 86, 67, 72, 82, 80

(a) Find the mean mass.

..... kg [1]

(b) Complete the ordered stem-and-leaf diagram and the key.

6	
7	
8	
9	

Key ..... | ..... represents ..... kg [3]

(c) Find.

(i) the mode ..... kg [1]

(ii) the median

..... kg [1]

(iii) the interquartile range.

..... kg [2]

DO NOT WRITE IN THIS MARGIN
DO NOT WRITE IN THIS MARGIN
DO NOT WRITE IN THIS MARGIN
DO NOT WRITE IN THIS MARGIN
DO NOT WRITE IN THIS MARGIN

6 **(a)**



Write down the fraction of the shape that is shaded.

..... [1]

(b) Write the numbers 0.4 $\frac{1}{5}$ 25% in order of size, starting with the smallest.

..... , ... , ... [1]
smallest

7 Suki changes $500 to Yen.
The exchange rate is $1 = 128.42 Yen.

(a) Suki spends 55 000 Yen.

Work out how many Yen she has left.

..... Yen [2]

(b) Suki changes the Yen she has left back to dollars.
The exchange rate is $1 = 124.12 Yen.

Work out how many dollars she receives.

$ ..... [1]

DO NOT WRITE IN THIS MARGIN
DO NOT WRITE IN THIS MARGIN
DO NOT WRITE IN THIS MARGIN
DO NOT WRITE IN THIS MARGIN
DO NOT WRITE IN THIS MARGIN

GradeMax

8 **(a)** Simplify $3x+4x-5x$.

..... [1]

(b) Expand and simplify $(x-3)(2x+7)$.

..... [2]

9 Samira buys these items.

1.5 kg of apples at \$2.40 per kg.
Some packets of rice at \$4.35 per packet.

Samira pays a total of \$16.65 .

Work out how many packets of rice she buys.

..... [3]

10 Divide 336 in the ratio 6 : 1.

..... , ... [2]

DO NOT WRITE IN THIS MARGIN
DO NOT WRITE IN THIS MARGIN
DO NOT WRITE IN THIS MARGIN
DO NOT WRITE IN THIS MARGIN
DO NOT WRITE IN THIS MARGIN

GradeMax

DO NOT WRITE IN THIS MARGIN
DO NOT WRITE IN THIS MARGIN
DO NOT WRITE IN THIS MARGIN
DO NOT WRITE IN THIS MARGIN
DO NOT WRITE IN THIS MARGIN

11 Ricardo invests \$600 at a rate of 1.2% per year compound interest.

Find the value of Ricardo's investment at the end of 4 years.

\$ ..... [2]

12 A phone costs \$538.
The cost of the phone is increased to \$570.28 .

Work out the percentage increase.

..... % [2]

13 Write 2560 in standard form.

..... [1]

GradeMax

14 These are 3 shapes, *A*, *B* and *C*.
O is the centre of shape *A*.

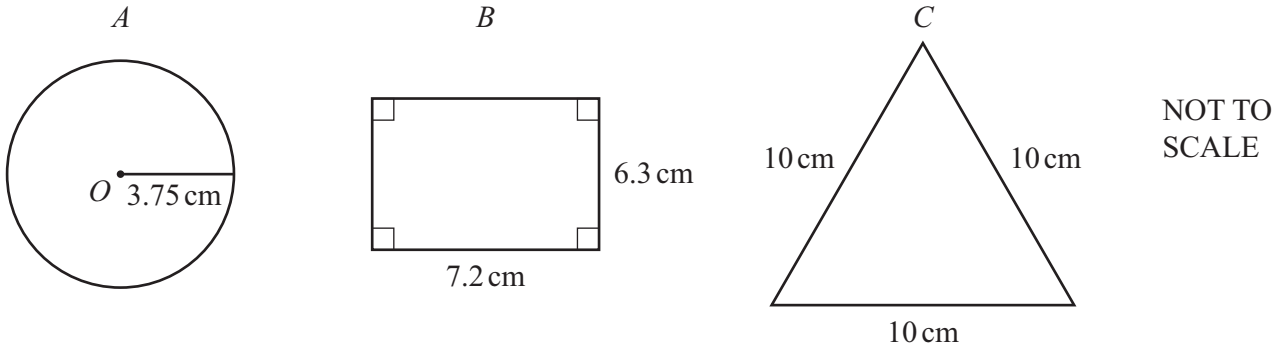

(a) Write down the mathematical name for each shape.

A .....

B .....

C .....

[2]

(b) Use Pythagoras' theorem to show that the perpendicular height of shape *C* is 8.66 cm correct to 2 decimal places.

[3]

(c) Work out the area of each shape.

A ..... cm^2

B ..... cm^2

C ..... cm^2

[4]

DO NOT WRITE IN THIS MARGIN
DO NOT WRITE IN THIS MARGIN
DO NOT WRITE IN THIS MARGIN
DO NOT WRITE IN THIS MARGIN
DO NOT WRITE IN THIS MARGIN

15 The diagram shows a solid trophy.

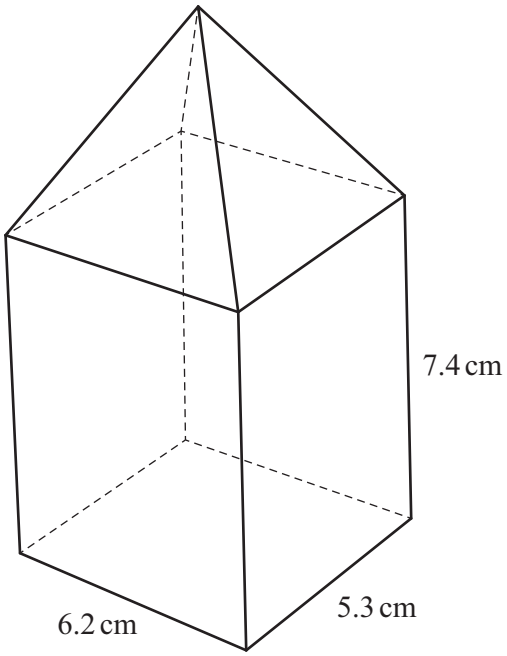

NOT TO SCALE

The trophy is made by joining a pyramid to a cuboid.

The cuboid has dimensions 6.2 cm by 5.3 cm by 7.4 cm.
The height of the pyramid is H cm.
The total height of the trophy is 10.2 cm.

(a) Show that $H = 2.8$.

[1]

(b) Work out the total volume of the trophy.

..... cm^3 [4]

DO NOT WRITE IN THIS MARGIN
DO NOT WRITE IN THIS MARGIN
DO NOT WRITE IN THIS MARGIN
DO NOT WRITE IN THIS MARGIN
DO NOT WRITE IN THIS MARGIN

GradeMax

16

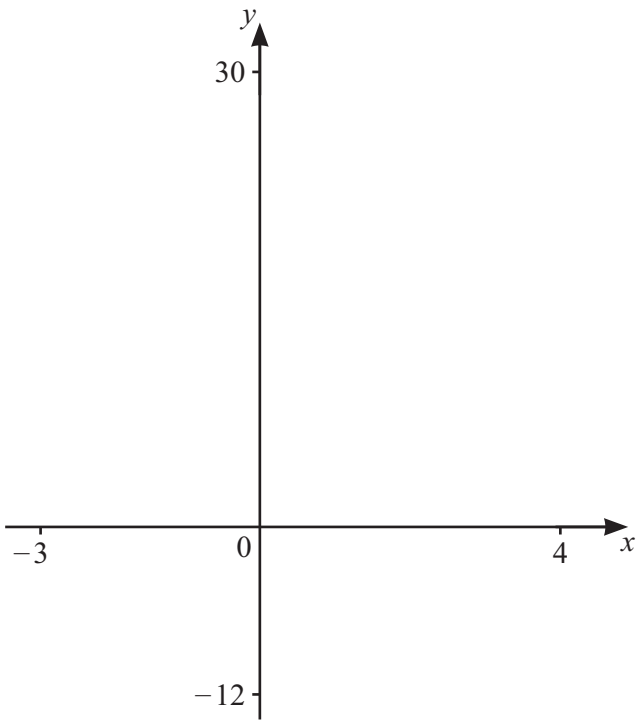

(a) On the diagram, sketch the graph of $y = 2x^2 + x - 6$ for values of x between -3 and 4. [2]

(b) **(i)** On the diagram, sketch the graph of $y = 3 + 2x - x^2$ for values of x between -3 and 4. [2]

(ii) Find the coordinates of the maximum of $y = 3 + 2x - x^2$.

(..... , ...) [1]

(c) Find the x-coordinate of each point of intersection of $y = 2x^2 + x - 6$ and $y = 3 + 2x - x^2$.

$x =$ ..... and $x =$ ..... [2]

DO NOT WRITE IN THIS MARGIN
DO NOT WRITE IN THIS MARGIN
DO NOT WRITE IN THIS MARGIN
DO NOT WRITE IN THIS MARGIN
DO NOT WRITE IN THIS MARGIN

* 0000800000011 *

17

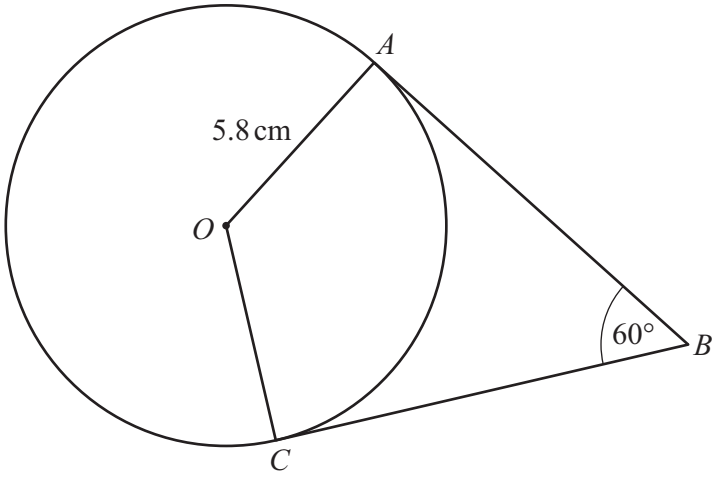

NOT TO SCALE

The diagram shows a circle with centre O and radius 5.8 cm.
BA and BC are tangents to the circle.
Angle $ABC = 60°$.

(a) Show that angle $AOC = 120°$.

[2]

(b) Find the length of the arc AC.

.....cm [2]

(c) Find the length of AB.

.....cm [3]

DO NOT WRITE IN THIS MARGIN
DO NOT WRITE IN THIS MARGIN
DO NOT WRITE IN THIS MARGIN
DO NOT WRITE IN THIS MARGIN
DO NOT WRITE IN THIS MARGIN

GradeMax

BLANK PAGE

DO NOT WRITE IN THIS MARGIN
DO NOT WRITE IN THIS MARGIN
DO NOT WRITE IN THIS MARGIN
DO NOT WRITE IN THIS MARGIN
DO NOT WRITE IN THIS MARGIN

Permission to reproduce items where third-party owned material protected by copyright is included has been sought and cleared where possible. Every reasonable effort has been made by the publisher (UCLES) to trace copyright holders, but if any items requiring clearance have unwittingly been included, the publisher will be pleased to make amends at the earliest possible opportunity.

To avoid the issue of disclosure of answer-related information to candidates, all copyright acknowledgements are reproduced online in the Cambridge Assessment International Education Copyright Acknowledgements Booklet. This is produced for each series of examinations and is freely available to download at www.cambridgeinternational.org after the live examination series.

Cambridge Assessment International Education is part of Cambridge Assessment. Cambridge Assessment is the brand name of the University of Cambridge Local Examinations Syndicate (UCLES), which is a department of the University of Cambridge.