GradeMax

* 0000800000001 * DFD

CAMBRIDGE
International Education

Cambridge IGCSE™

CANDIDATE NAME

CENTRE NUMBER

CANDIDATE NUMBER

* 9 1 3 5 9 3 9 3 2 7 *

CAMBRIDGE INTERNATIONAL MATHEMATICS **0607/12**

Paper 1 Non-calculator (Core) **February/March 2026**

1 hour 15 minutes

You must answer on the question paper.

You will need: Geometrical instruments

INSTRUCTIONS

- Answer **all** questions.
- Use a black or dark blue pen. You may use an HB pencil for any diagrams or graphs.
- Write your name, centre number and candidate number in the boxes at the top of the page.
- Write your answer to each question in the space provided.
- Do **not** use an erasable pen. Do **not** use correction fluid or tape.
- Do **not** write on any bar codes.
- Calculators must **not** be used in this paper.
- You may use tracing paper.
- You must show all necessary working clearly. You will be given marks for correct methods even if your answer is incorrect.

INFORMATION

- The total mark for this paper is 60.
- The number of marks for each question or part question is shown in brackets [ ].

This document has **16** pages. Any blank pages are indicated.

DC (WW/CT) 355990/2
© Cambridge University Press & Assessment 2026

[Turn over

GradeMax

List of formulas

Area, A, of triangle, base b, height h.	$A = \frac{1}{2}bh$
Area, A, of circle of radius r.	$A = \pi r^2$
Circumference, C, of circle of radius r.	$C = 2\pi r$
Curved surface area, A, of cylinder of radius r, height h.	$A = 2\pi rh$
Curved surface area, A, of cone of radius r, sloping edge l.	$A = \pi rl$
Surface area, A, of sphere of radius r.	$A = 4\pi r^2$
Volume, V, of prism, cross-sectional area A, length l.	$V = Al$
Volume, V, of pyramid, base area A, height h.	$V = \frac{1}{3}Ah$
Volume, V, of cylinder of radius r, height h.	$V = \pi r^2 h$
Volume, V, of cone of radius r, height h.	$V = \frac{1}{3}\pi r^2 h$
Volume, V, of sphere of radius r.	$V = \frac{4}{3}\pi r^3$

© Cambridge University Press & Assessment 2026

DO NOT WRITE IN THIS MARGIN
DO NOT WRITE IN THIS MARGIN
DO NOT WRITE IN THIS MARGIN
DO NOT WRITE IN THIS MARGIN
DO NOT WRITE IN THIS MARGIN

GradeMax

Calculators must **not** be used in this paper.

1 This is a list of numbers.

20 21 22 23 24 25 26 27 28

From the list, write down

(a) the square number

..... [1]

(b) the multiple of 8

..... [1]

(c) the cube number

..... [1]

(d) the prime number.

..... [1]

2 Complete the mapping diagram.

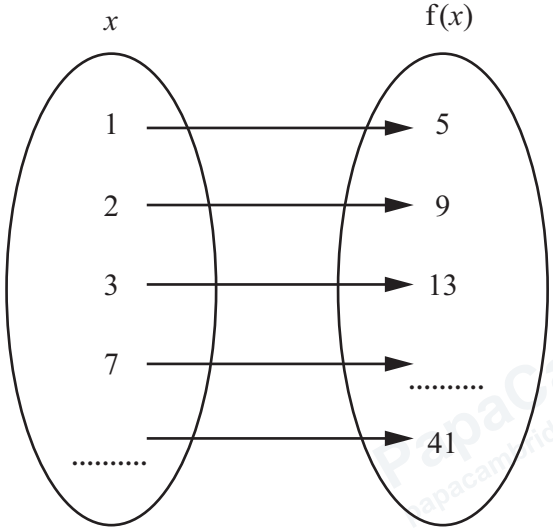

[2]

© Cambridge University Press & Assessment 2026

DO NOT WRITE IN THIS MARGIN
DO NOT WRITE IN THIS MARGIN
DO NOT WRITE IN THIS MARGIN
DO NOT WRITE IN THIS MARGIN
DO NOT WRITE IN THIS MARGIN

GradeMax

3 The diagram shows triangle PQR and triangle TSR drawn on a grid.

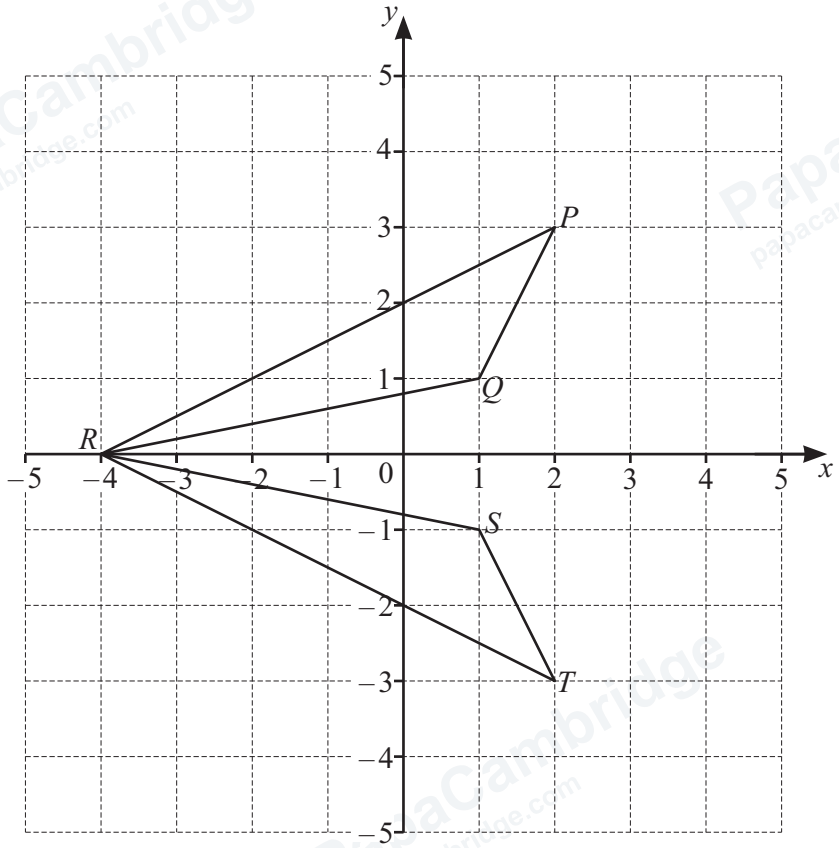

(a) Write down the coordinates of point S.

(..... , ...) [1]

(b) Complete the statement.

The x-coordinate of point P is 6 more than the x-coordinate of point ..... [1]

(c) Describe fully the **single** transformation that maps triangle PQR onto triangle TSR.

.....

..... [2]

DO NOT WRITE IN THIS MARGIN
DO NOT WRITE IN THIS MARGIN
DO NOT WRITE IN THIS MARGIN
DO NOT WRITE IN THIS MARGIN
DO NOT WRITE IN THIS MARGIN

© Cambridge University Press & Assessment 2026

GradeMax

4 $y = 2x - 13$

(a) Find the value of y when $x = 8$.

$y =$ ..... [1]

(b) Find the value of x when $y = 15$.

$x =$ ..... [2]

5 Work out.

(a) $14 - 3 \times 2$

..... [1]

(b) $\sqrt{81}$

..... [1]

(c) -8×0.2

..... [1]

(d) $2\frac{1}{5} - 1\frac{2}{3}$

..... [3]

DO NOT WRITE IN THIS MARGIN
DO NOT WRITE IN THIS MARGIN
DO NOT WRITE IN THIS MARGIN
DO NOT WRITE IN THIS MARGIN
DO NOT WRITE IN THIS MARGIN

PapaCambridge papacambridge.com

© Cambridge University Press & Assessment 2026

6 The diagram shows 5 straight lines.
There are two sets of parallel lines.

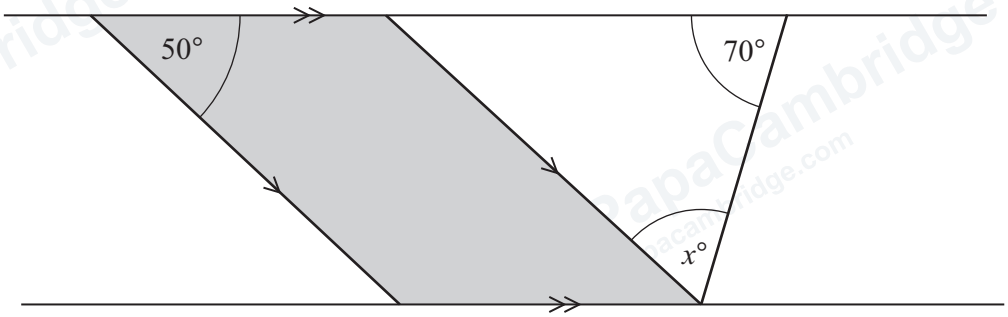

NOT TO SCALE

(a) Write down the mathematical name of the shaded quadrilateral.

..... [1]

(b) Find the value of x.

$x =$ ..... [2]

7 Simplify.

(a) $5m - 2 - 2m + 3$

..... [2]

(b) $\frac{2k}{k}$

..... [1]

DO NOT WRITE IN THIS MARGIN
DO NOT WRITE IN THIS MARGIN
DO NOT WRITE IN THIS MARGIN
DO NOT WRITE IN THIS MARGIN
DO NOT WRITE IN THIS MARGIN

© Cambridge University Press & Assessment 2026

GradeMax

8 **(a)** Diagrams A, B, C and D each show a straight-line graph.

A

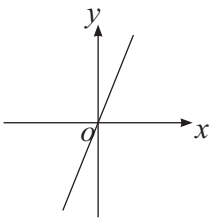

B

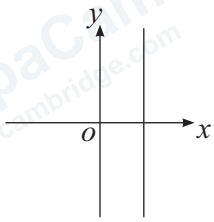

NOT TO SCALE

C

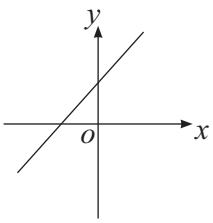

D

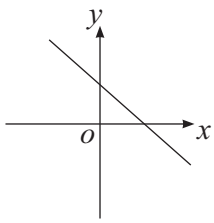

Write down the letter of the diagram which shows the line with equation

(i) $y = 2x$

..... [1]

(ii) $y = 2 - x$.

..... [1]

(b) The diagram below shows another straight-line graph.

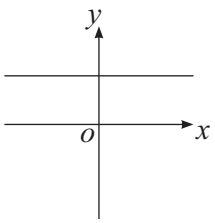

NOT TO SCALE

Give a reason why the equation of this line is not $x = 5$.

..... [1]

DO NOT WRITE IN THIS MARGIN
DO NOT WRITE IN THIS MARGIN
DO NOT WRITE IN THIS MARGIN
DO NOT WRITE IN THIS MARGIN
DO NOT WRITE IN THIS MARGIN

© Cambridge University Press & Assessment 2026

GradeMax

9 The scatter diagram shows points connecting values of t and values of m.

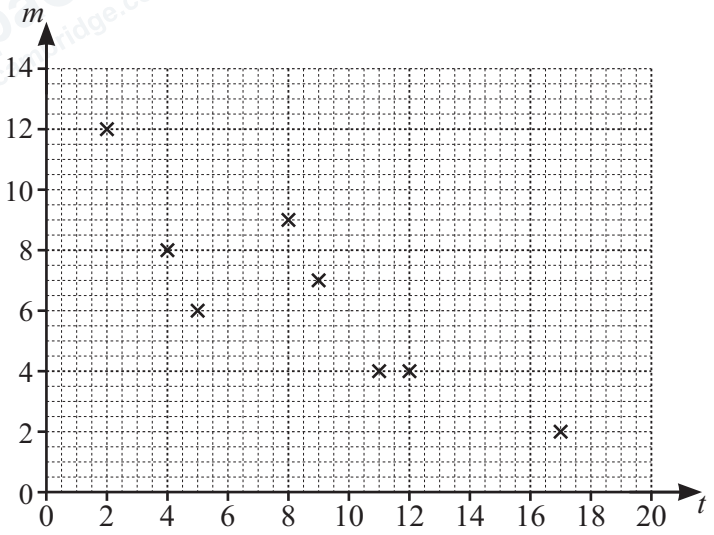

(a) Write down the type of correlation shown in the scatter diagram.

..... [1]

(b) The mean value of t is 8.5 and the mean value of m is 6.5 .

Plot the mean point and draw a line of best fit. [2]

(c) Use your line of best fit to estimate the value of t when $m = 5$.

$t =$ ..... [1]

DO NOT WRITE IN THIS MARGIN
DO NOT WRITE IN THIS MARGIN
DO NOT WRITE IN THIS MARGIN
DO NOT WRITE IN THIS MARGIN
DO NOT WRITE IN THIS MARGIN

© Cambridge University Press & Assessment 2026

GradeMax

10

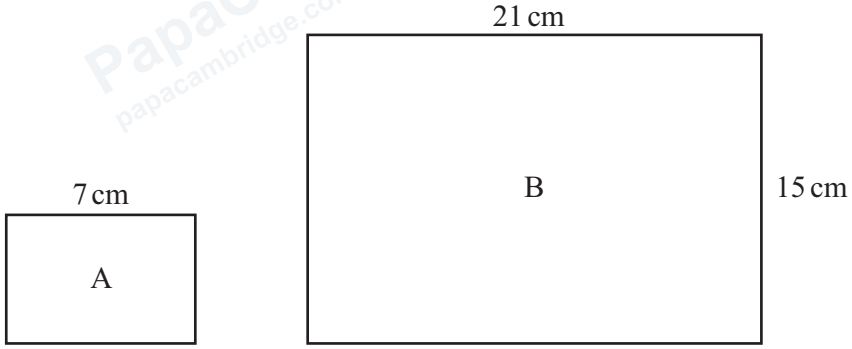

Rectangle A and rectangle B are mathematically similar.

Find the perimeter of rectangle A.

..... cm [3]

11 A car travels at a speed of 90 km / h for 1 hour 20 min.

Work out the distance the car travels.

..... km [2]

DO NOT WRITE IN THIS MARGIN
DO NOT WRITE IN THIS MARGIN
DO NOT WRITE IN THIS MARGIN
DO NOT WRITE IN THIS MARGIN
DO NOT WRITE IN THIS MARGIN

© Cambridge University Press & Assessment 2026

12 A cylinder has height 6 cm.
The curved surface area of the cylinder is 48π cm^2.

Find the radius of the cylinder.

..... cm [2]

13

North

NOT TO SCALE

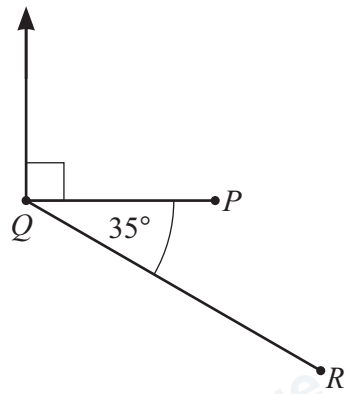

Find the bearing of

(a) P from Q

..... [1]

(b) Q from R.

..... [2]

DO NOT WRITE IN THIS MARGIN
DO NOT WRITE IN THIS MARGIN
DO NOT WRITE IN THIS MARGIN
DO NOT WRITE IN THIS MARGIN
DO NOT WRITE IN THIS MARGIN

© Cambridge University Press & Assessment 2026

GradeMax

14 $A = \{3, 5, 7, 9, 11, 13\}$

$B = \{5, 8, 11, 14\}$

(a) List the elements of $A \cap B$.

..... [1]

(b) Find $n(A \cup B)$.

..... [1]

15 Write each number in standard form.

(a) 671 000 000

..... [1]

(b) 0.033

..... [1]

16 Find the highest common factor (HCF) of 42 and 54.

..... [2]

17 By writing each number correct to 1 significant figure, find an estimate of

$$\frac{5.1 \times 19.5}{6.9 - 3.3}.$$

..... [2]

DO NOT WRITE IN THIS MARGIN

© Cambridge University Press & Assessment 2026

GradeMax

18 The diagram shows a circle with centre O.

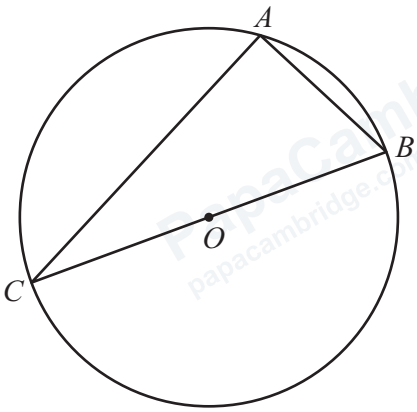

Points A, B and C lie on the circle.

(a) Write down the mathematical name for the straight line COB.

..... [1]

(b) Find angle CAB.
Give a geometrical reason for your answer.

Angle CAB = ... because .....

..... [1]

DO NOT WRITE IN THIS MARGIN
DO NOT WRITE IN THIS MARGIN
DO NOT WRITE IN THIS MARGIN
DO NOT WRITE IN THIS MARGIN
DO NOT WRITE IN THIS MARGIN

© Cambridge University Press & Assessment 2026

19 In a café, the probability that a customer buys a cup of tea is $\frac{1}{4}$.

2 customers in the café are chosen at random.

(a) Complete the tree diagram.

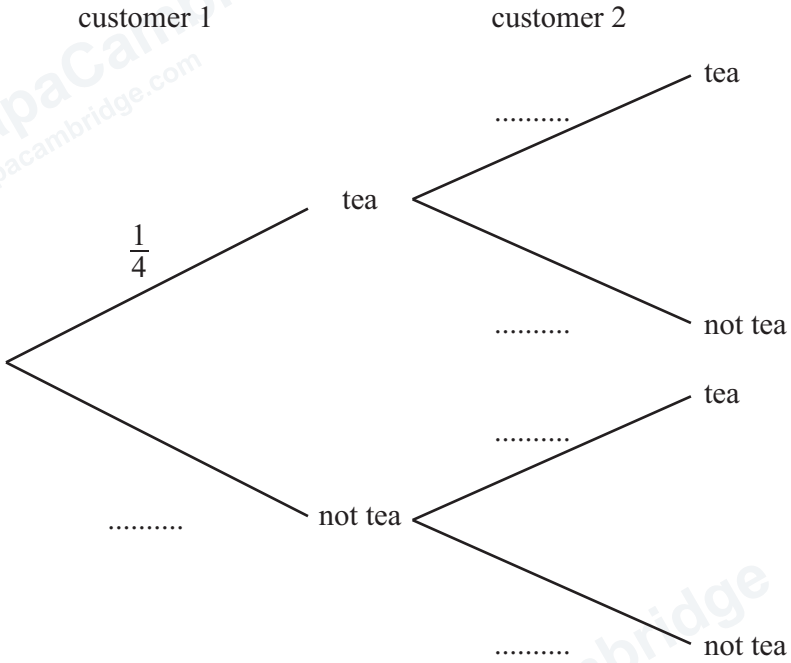

[2]

(b) Work out the probability that the 2 customers each buy a cup of tea.

..... [2]

DO NOT WRITE IN THIS MARGIN
DO NOT WRITE IN THIS MARGIN
DO NOT WRITE IN THIS MARGIN
DO NOT WRITE IN THIS MARGIN
DO NOT WRITE IN THIS MARGIN

GradeMax

20 Solve the simultaneous equations.

$$3x + 4y = 13$$
$$2x - 5y = 1$$

$x =$ .....

$y =$ .....

[4]

DO NOT WRITE IN THIS MARGIN
DO NOT WRITE IN THIS MARGIN
DO NOT WRITE IN THIS MARGIN
DO NOT WRITE IN THIS MARGIN
DO NOT WRITE IN THIS MARGIN

© Cambridge University Press & Assessment 2026

GradeMax

BLANK PAGE

DO NOT WRITE IN THIS MARGIN
DO NOT WRITE IN THIS MARGIN
DO NOT WRITE IN THIS MARGIN
DO NOT WRITE IN THIS MARGIN
DO NOT WRITE IN THIS MARGIN

© Cambridge University Press & Assessment 2026

GradeMax

BLANK PAGE

DO NOT WRITE IN THIS MARGIN
DO NOT WRITE IN THIS MARGIN
DO NOT WRITE IN THIS MARGIN
DO NOT WRITE IN THIS MARGIN
DO NOT WRITE IN THIS MARGIN

Permission to reproduce items where third-party owned material protected by copyright is included has been sought and cleared where possible. Every reasonable effort has been made by the publisher (Cambridge University Press & Assessment) to trace copyright holders, but if any items requiring clearance have unwittingly been included, the publisher will be pleased to make amends at the earliest possible opportunity.

To avoid the issue of disclosure of answer-related information to candidates, all copyright acknowledgements are reproduced online in our Copyright Acknowledgements Booklet. This is produced for each series of examinations and is freely available to download at www.cambridgeinternational.org after the live examination series.

Cambridge International Education is the name of our awarding body and a part of Cambridge University Press & Assessment, which is a department of the University of Cambridge.

© Cambridge University Press & Assessment 2026