GradeMax

Cambridge Assessment International Education

Cambridge IGCSE™

CANDIDATE NAME									
CENTRE NUMBER						CANDIDATE NUMBER				

5923320059

MATHEMATICS **0580/22**

Paper 2 (Extended) **February/March 2023**

1 hour 30 minutes

You must answer on the question paper.

You will need: Geometrical instruments

INSTRUCTIONS

- Answer **all** questions.
- Use a black or dark blue pen. You may use an HB pencil for any diagrams or graphs.
- Write your name, centre number and candidate number in the boxes at the top of the page.
- Write your answer to each question in the space provided.
- Do **not** use an erasable pen or correction fluid.
- Do **not** write on any bar codes.
- You should use a calculator where appropriate.
- You may use tracing paper.
- You must show all necessary working clearly.
- Give non-exact numerical answers correct to 3 significant figures, or 1 decimal place for angles in degrees, unless a different level of accuracy is specified in the question.
- For π, use either your calculator value or 3.142.

INFORMATION

- The total mark for this paper is 70.
- The number of marks for each question or part question is shown in brackets [ ].

This document has **12** pages.

DC (CJ/CT) 312606/2
© UCLES 2023

GradeMax

1

12	15	27	29	91	93

From the list of numbers, write down

(a) a cube number

..... [1]

(b) a prime number.

..... [1]

2 $\mathbf{v} = \begin{pmatrix} -1 \\ 3 \end{pmatrix}$ $\mathbf{y} = \begin{pmatrix} 2 \\ 5 \end{pmatrix}$

Find

(a) $\mathbf{v} - \mathbf{y}$

( ) [1]

(b) $2\mathbf{v}$.

( ) [1]

3

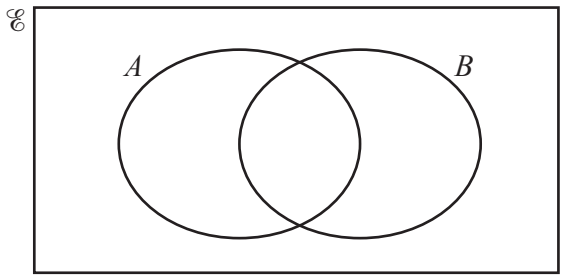

On the Venn diagram, shade the region $A \cap B$. [1]

4 23, 17, 11, 5, ...

(a) Write down the next number in this sequence.

..... [1]

(b) Find the nth term of this sequence.

..... [2]

© UCLES 2023

GradeMax

5 Factorise completely.

$$8g - 2g^2$$

..... [2]

6 **Without using a calculator**, work out $\frac{4}{7} \div 8$.

You must show all your working and give your answer as a fraction in its simplest form.

..... [2]

7 Solve.

(a) $15t + 8 = 4 - t$

$t =$ ..... [2]

(b) $\frac{25 - 2u}{3} = 2$

$u =$ ..... [2]

8 Calculate 0.3^2 .
Give your answer in standard form.

..... [2]

© UCLES 2023

[Turn over

9 Solve the simultaneous equations.
You must show all your working.

$$3x - 2y = 19$$
$$x + y = 3$$

$x =$ .....

$y =$ ..... [3]

10

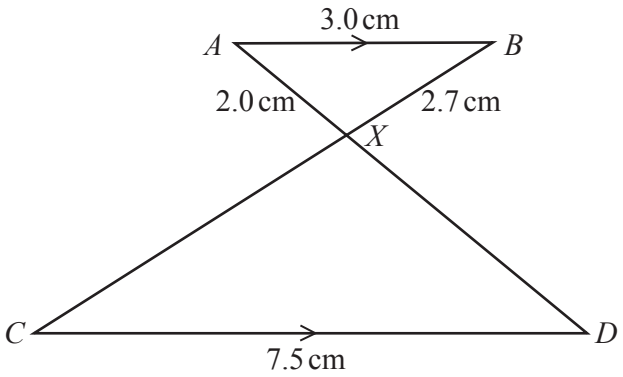

NOT TO SCALE

In the diagram, AB and CD are parallel.
The lines CB and AD intersect at X.
$AB = 3.0$ cm, $AX = 2.0$ cm, $BX = 2.7$ cm and $CD = 7.5$ cm.

Find the length of BC.

$BC =$ ..... cm [3]

© UCLES 2023

11 Find the highest common factor (HCF) of $12x^{12}$ and $16x^{16}$.

..... [2]

12 In a regular polygon, the interior angle and the exterior angle are in the ratio interior : exterior = 11 : 1.

Find the number of sides of this regular polygon.

..... [3]

13

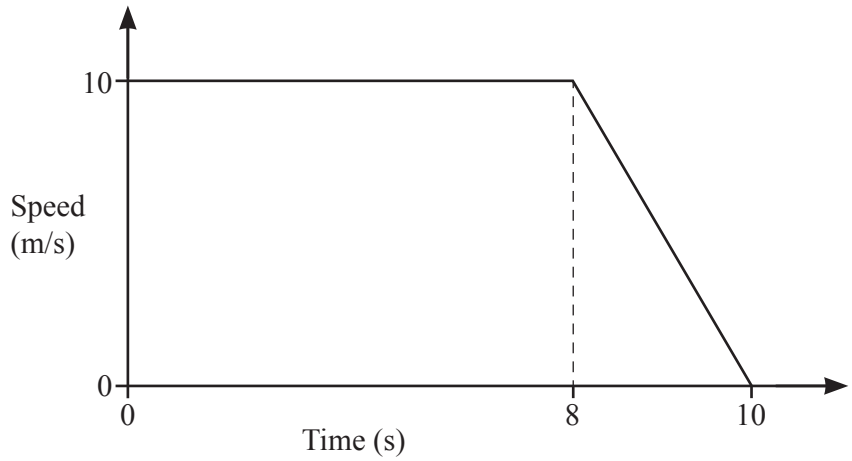

NOT TO SCALE

The diagram shows the speed–time graph for part of a car journey.

Calculate the total distance travelled during the 10 seconds.

..... m [2]

14

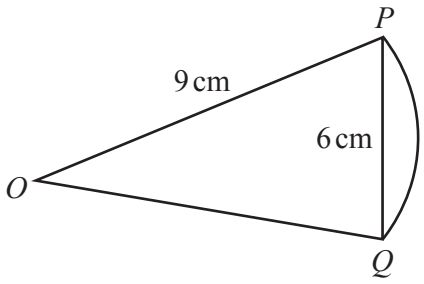

NOT TO SCALE

The diagram shows a sector of a circle with centre O and radius 9 cm.
The length of the chord PQ is 6 cm.

Calculate the length of the arc PQ.

..... cm [3]

15 Simplify $\left(3125w^{3125}\right)^{\frac{1}{5}}$.

..... [2]

16 y is inversely proportional to x^2.
When $x = 3$, $y = 2$.

Find y when $x = 2$.

$y =$ ..... [3]

GradeMax

17

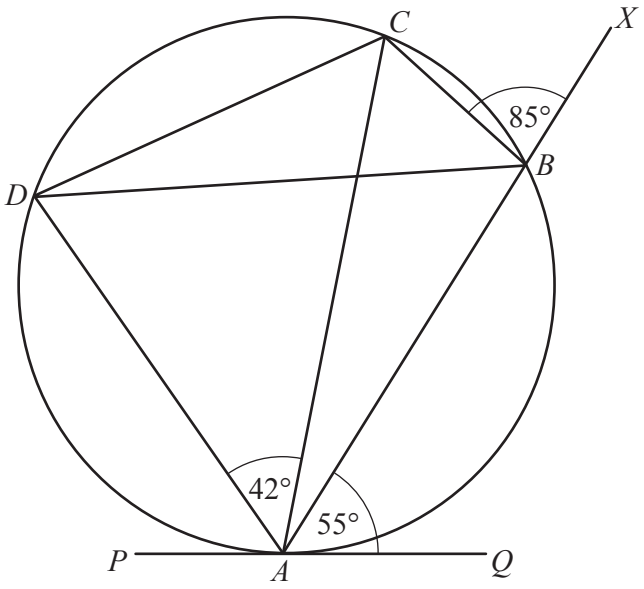

NOT TO SCALE

ABCD is a cyclic quadrilateral, *ABX* is a straight line and *PQ* is a tangent to the circle at *A*.
Angle *CBX* = 85°, angle *BAQ* = 55° and angle *CAD* = 42°.

Find

(a) angle *CBD*

Angle *CBD* = ... [1]

(b) angle *ACB*

Angle *ACB* = ... [1]

(c) angle *ADC*

Angle *ADC* = ... [1]

(d) angle *BCD*

Angle *BCD* = ... [2]

(e) angle *PAD*.

Angle *PAD* = ... [1]

© UCLES 2023

[Turn over

GradeMax

18 Two solids are mathematically similar and have volumes $81\,\text{cm}^3$ and $24\,\text{cm}^3$.
The surface area of the smaller solid is $44\,\text{cm}^2$.

Calculate the surface area of the larger solid.

..... cm^2 [3]

19 Find the values of x when $6x + y = 10$ and $y = x^2 - 3x + 10$.

$x =$ ..... or $x =$ ..... [3]

© UCLES 2023

20 Find the nth term of each sequence.

(a) –1, 0, 7, 26, 63, …

..... [2]

(b) 24, 12, 6, 3, 1.5, …

..... [2]

21 A car travels 14 km, correct to the nearest kilometre.
This takes 12 minutes, correct to the nearest minute.

Calculate the lower bound of the speed of the car.
Give your answer in kilometres per minute.

..... km/min [3]

© UCLES 2023

GradeMax

22

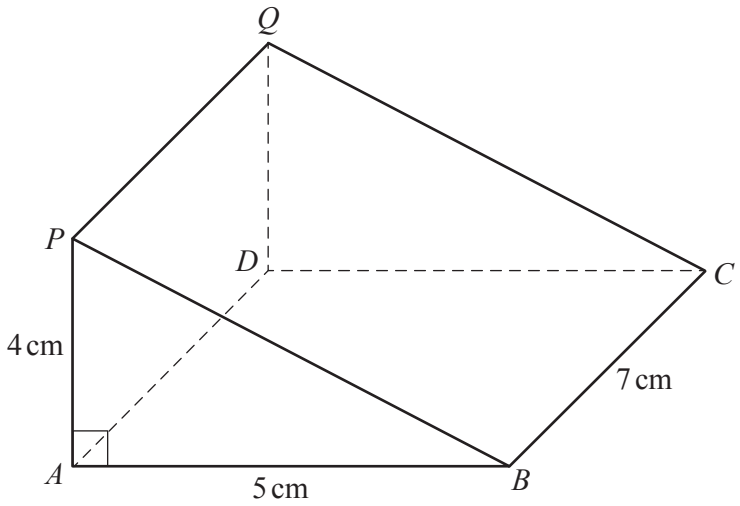

NOT TO SCALE

The diagram shows a triangular prism *ABCDQP* of length 7 cm.
The cross-section is triangle *PAB* with $PA = 4\,\text{cm}$, $AB = 5\,\text{cm}$ and angle $PAB = 90°$.

Calculate the angle between the line *PC* and the base *ABCD*.

..... [4]

© UCLES 2023

23 Simplify.

$$\frac{5x^2 - 19x + 12}{x^2 - 9}$$

..... [4]

24 The probability of Jamie hitting a target is $\frac{1}{3}$.

The probability that he hits the target for the first time on his nth attempt is $\frac{64}{2187}$.

Find the value of n.

$n =$ ..... [2]

Question 25 is printed on the next page.

GradeMax

25 $f(x) = x^3 + 1$

Find $f^{-1}(x)$.

$f^{-1}(x) =$ ..... [2]

Permission to reproduce items where third-party owned material protected by copyright is included has been sought and cleared where possible. Every reasonable effort has been made by the publisher (UCLES) to trace copyright holders, but if any items requiring clearance have unwittingly been included, the publisher will be pleased to make amends at the earliest possible opportunity.

To avoid the issue of disclosure of answer-related information to candidates, all copyright acknowledgements are reproduced online in the Cambridge Assessment International Education Copyright Acknowledgements Booklet. This is produced for each series of examinations and is freely available to download at www.cambridgeinternational.org after the live examination series.

Cambridge Assessment International Education is part of Cambridge Assessment. Cambridge Assessment is the brand name of the University of Cambridge Local Examinations Syndicate (UCLES), which is a department of the University of Cambridge.

© UCLES 2023