GradeMax

* 0000800000001 * DFD

CAMBRIDGE
International Education

Cambridge IGCSE™

CANDIDATE NAME

CENTRE NUMBER

CANDIDATE NUMBER

1997811256

MATHEMATICS **0580/12**

Paper 1 Non-calculator (Core) **May/June 2026**

1 hour 30 minutes

You must answer on the question paper.

You will need: Geometrical instruments

INSTRUCTIONS

- Answer **all** questions.
- Use a black or dark blue pen. You may use an HB pencil for any diagrams or graphs.
- Write your name, centre number and candidate number in the boxes at the top of the page.
- Write your answer to each question in the space provided.
- Do **not** use an erasable pen. Do **not** use correction fluid or tape.
- Do **not** write on any bar codes.
- Calculators must **not** be used in this paper.
- You may use tracing paper.
- You must show all necessary working clearly.

INFORMATION

- The total mark for this paper is 80.
- The number of marks for each question or part question is shown in brackets [ ].

This document has **16** pages. Any blank pages are indicated.

DC (WW/CB) 355679/2
© Cambridge University Press & Assessment 2026

[Turn over

GradeMax

List of formulas

Area, A, of triangle, base b, height h.	$A = \frac{1}{2}bh$
Area, A, of circle of radius r.	$A = \pi r^2$
Circumference, C, of circle of radius r.	$C = 2\pi r$
Curved surface area, A, of cylinder of radius r, height h.	$A = 2\pi rh$
Curved surface area, A, of cone of radius r, sloping edge l.	$A = \pi rl$
Surface area, A, of sphere of radius r.	$A = 4\pi r^2$
Volume, V, of prism, cross-sectional area A, length l.	$V = Al$
Volume, V, of pyramid, base area A, height h.	$V = \frac{1}{3}Ah$
Volume, V, of cylinder of radius r, height h.	$V = \pi r^2 h$
Volume, V, of cone of radius r, height h.	$V = \frac{1}{3}\pi r^2 h$
Volume, V, of sphere of radius r.	$V = \frac{4}{3}\pi r^3$

DO NOT WRITE IN THIS MARGIN
DO NOT WRITE IN THIS MARGIN
DO NOT WRITE IN THIS MARGIN
DO NOT WRITE IN THIS MARGIN
DO NOT WRITE IN THIS MARGIN

© Cambridge University Press & Assessment 2026

GradeMax

Calculators must **not** be used in this paper.

1 Write down the value of $\sqrt{81}$.

..... [1]

2 **(a)** Add 63 and 28.

..... [1]

(b) Work out 50% of 526.

..... [1]

3 **(a)** Write 35% as a decimal.

..... [1]

(b) Write $\frac{4}{5}$ as a percentage.

..... % [1]

4 The diagram shows a shape drawn on a 1 cm^2 grid.

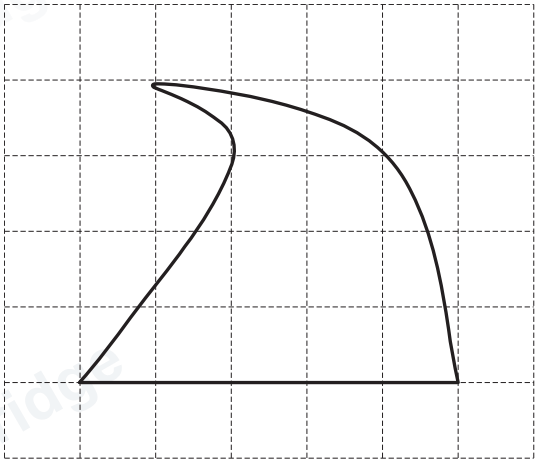

By counting squares, estimate the area of the shape.

..... cm^2 [1]

© Cambridge University Press & Assessment 2026

DO NOT WRITE IN THIS MARGIN
DO NOT WRITE IN THIS MARGIN
DO NOT WRITE IN THIS MARGIN
DO NOT WRITE IN THIS MARGIN
DO NOT WRITE IN THIS MARGIN

5 **(a)** Write 65 432 correct to the nearest hundred.

..... [1]

(b) Write 0.04857 correct to 3 decimal places.

..... [1]

6 Put **one** pair of brackets into each calculation to make it correct.

(a) $7 \times 3 - 2 \times 4 = 28$ [1]

(b) $9 - 80 \div 8 - 6 = 5$ [1]

7

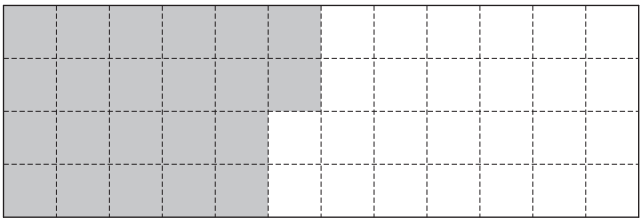

(a) Write down the fraction of the rectangle that is shaded.
Give your answer in its simplest form.

..... [2]

(b) On the diagram, shade some more squares so that $\frac{1}{6}$ of the rectangle is **not** shaded. [1]

DO NOT WRITE IN THIS MARGIN
DO NOT WRITE IN THIS MARGIN
DO NOT WRITE IN THIS MARGIN
DO NOT WRITE IN THIS MARGIN
DO NOT WRITE IN THIS MARGIN

© Cambridge University Press & Assessment 2026

GradeMax

8

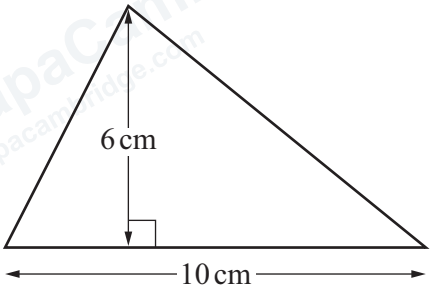

NOT TO SCALE

Work out the area of the triangle.

..... cm^2 [1]

9 The stem-and-leaf diagram shows the time, in minutes, it takes 20 students to eat lunch.

0	7 8 9
1	1 3 5 6 9
2	3 4 5 5 7 8 8 9
3	1 2 2 9

key : 3 | 1 represents 31 minutes

Complete these statements.

(a) ..... students took between 10 and 30 minutes to eat lunch. [1]

(b) ..... % of the students took less than 18 minutes to eat lunch. [1]

(c) The slowest student took ..... minutes longer than the quickest student. [1]

DO NOT WRITE IN THIS MARGIN
DO NOT WRITE IN THIS MARGIN
DO NOT WRITE IN THIS MARGIN
DO NOT WRITE IN THIS MARGIN
DO NOT WRITE IN THIS MARGIN

© Cambridge University Press & Assessment 2026

GradeMax

10 Phil has $7y - 52$ toy cars.
Ann has $78 - 6y$ toy cars.
Phil and Ann have the same number of cars.

(a) Write down an equation to show this information.

..... [1]

(b) Solve your equation and work out the number of cars they each have.

They each have ..... cars. [3]

11 Complete these statements.

(a) 2 kg is the same as ..... g. [1]

(b) 7 cm^2 is the same as ..... mm^2. [1]

DO NOT WRITE IN THIS MARGIN
DO NOT WRITE IN THIS MARGIN
DO NOT WRITE IN THIS MARGIN
DO NOT WRITE IN THIS MARGIN
DO NOT WRITE IN THIS MARGIN

© Cambridge University Press & Assessment 2026

GradeMax

12 To make a solid, a net is drawn on the 1cm^2 grid.

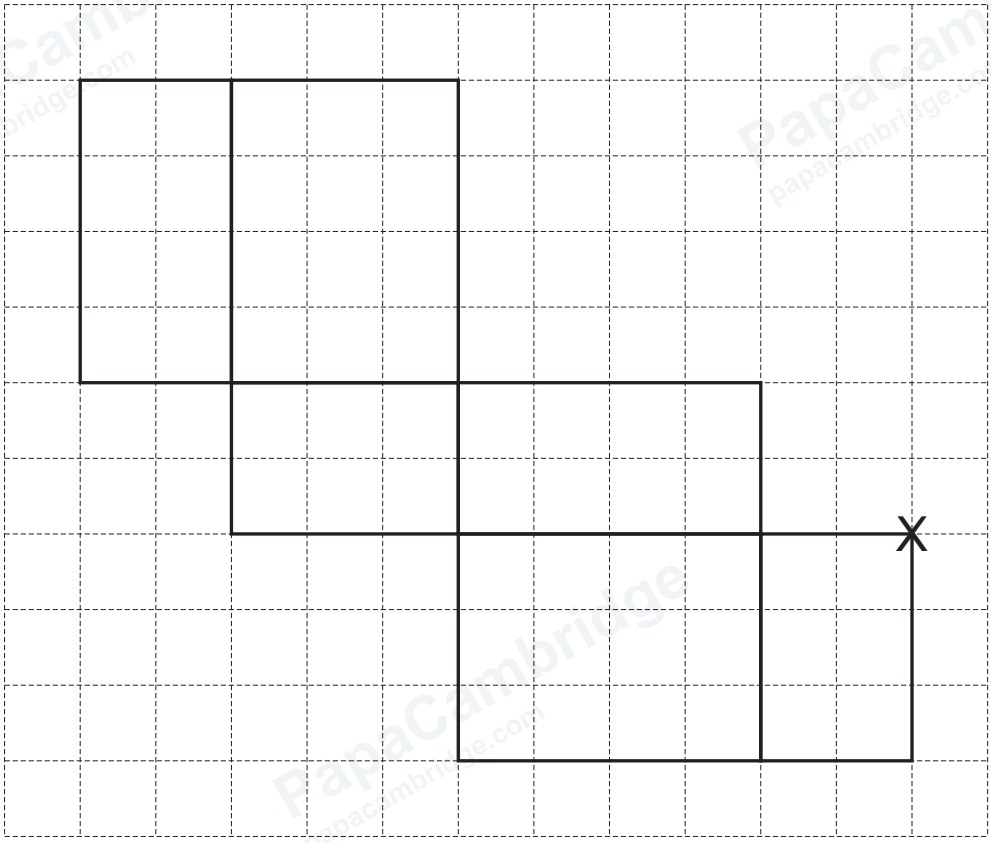

(a) Write down the mathematical name for the solid.

..... [1]

(b) Point X is marked on the diagram.

When the net is folded, there are two other points that meet at X.

On the diagram, mark each of these two points with an X. [2]

DO NOT WRITE IN THIS MARGIN
DO NOT WRITE IN THIS MARGIN
DO NOT WRITE IN THIS MARGIN
DO NOT WRITE IN THIS MARGIN
DO NOT WRITE IN THIS MARGIN

© Cambridge University Press & Assessment 2026

13 A trapezium, T, is drawn on the 1cm^2 grid.

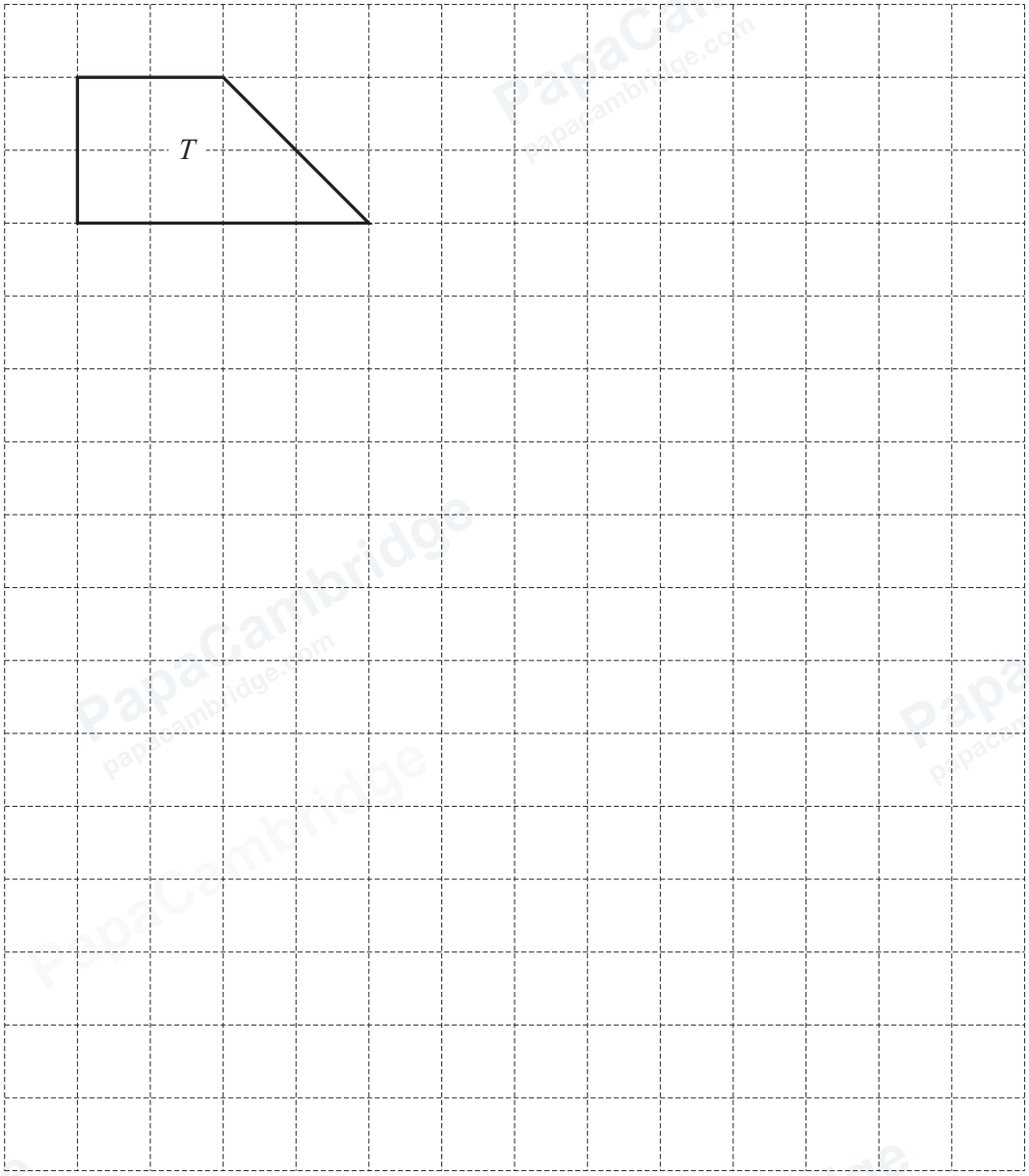

On the grid, draw

(a) a different trapezium that is mathematically similar to trapezium T [1]

(b) a rectangle with the same area as trapezium T. [2]

DO NOT WRITE IN THIS MARGIN
DO NOT WRITE IN THIS MARGIN
DO NOT WRITE IN THIS MARGIN
DO NOT WRITE IN THIS MARGIN
DO NOT WRITE IN THIS MARGIN

© Cambridge University Press & Assessment 2026

GradeMax

DO NOT WRITE IN THIS MARGIN
DO NOT WRITE IN THIS MARGIN
DO NOT WRITE IN THIS MARGIN
DO NOT WRITE IN THIS MARGIN
DO NOT WRITE IN THIS MARGIN

14 The total number of apples and oranges in a bowl is 20.
The ratio apples : oranges = 7 : 3.

Work out the number of apples.

..... [2]

15 Write down two geometrical properties of a parallelogram.

1 .....

2 .....
[2]

16 Find the value of the reciprocal of 0.8 .

..... [2]

17 **(a)** Two of the angles in a triangle are 100° and 30°.

Work out the size of the third angle.

..... [1]

(b) Work out the size of an interior angle of a regular 10-sided polygon.

..... [2]

© Cambridge University Press & Assessment 2026

18 **(a)** Simplify.

$3x - 2y + 5x + 7y$

..... [2]

(b) Expand the brackets and simplify.

$(3x + 5)(x - 7)$

..... [2]

19 Line L has the equation $y = 3x + 7$.

(a) Write down the gradient of line L.

..... [1]

(b) Point P and point W lie on line L.
P has coordinates $(4, p)$ and W has coordinates $(w, -11)$.

(i) Work out the value of p.

$p =$ ..... [1]

(ii) Work out the value of w.

$w =$ ..... [2]

20 Write down the inequality represented on the number line.

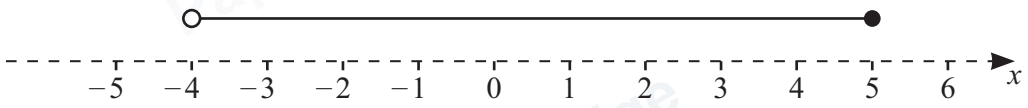

..... [2]

© Cambridge University Press & Assessment 2026

DO NOT WRITE IN THIS MARGIN
DO NOT WRITE IN THIS MARGIN
DO NOT WRITE IN THIS MARGIN
DO NOT WRITE IN THIS MARGIN
DO NOT WRITE IN THIS MARGIN

GradeMax

21 These are the first four diagrams in a sequence.
The diagrams are made using grey squares and white squares.

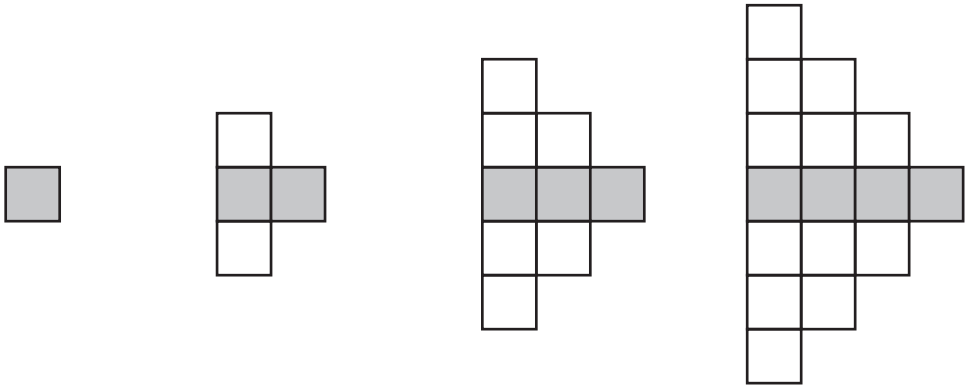

diagram 1 diagram 2 diagram 3 diagram 4

(a)

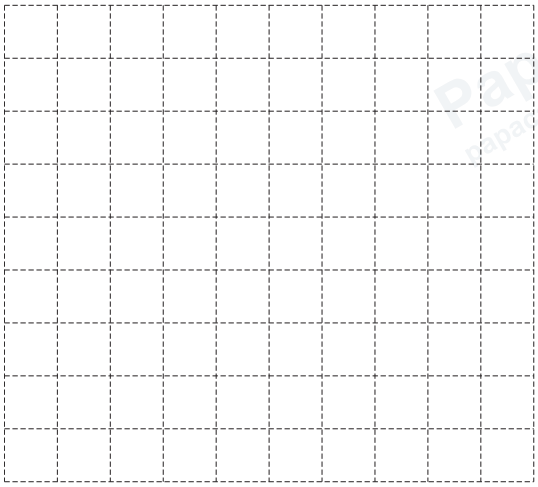

Draw diagram 5 on the grid. [1]

(b) Complete the table for diagram 4 and diagram n.

diagram	**1**	**2**	**3**	**4**		**n**
number of grey squares	1	2	3			
number of white squares	0	2	6			$n(n-1)$
total number of squares	1	4	9			

[4]

(c) Complete this statement.

A diagram in this sequence can **not** have a total number of 120 squares because .....

..... [1]

© Cambridge University Press & Assessment 2026

DO NOT WRITE IN THIS MARGIN
DO NOT WRITE IN THIS MARGIN
DO NOT WRITE IN THIS MARGIN
DO NOT WRITE IN THIS MARGIN
DO NOT WRITE IN THIS MARGIN

22 A bag contains 7 pink blocks and 5 green blocks.
Kay picks a block at random, notes its colour and puts it back in the bag.
She does this a second time.

(a) Complete the tree diagram.

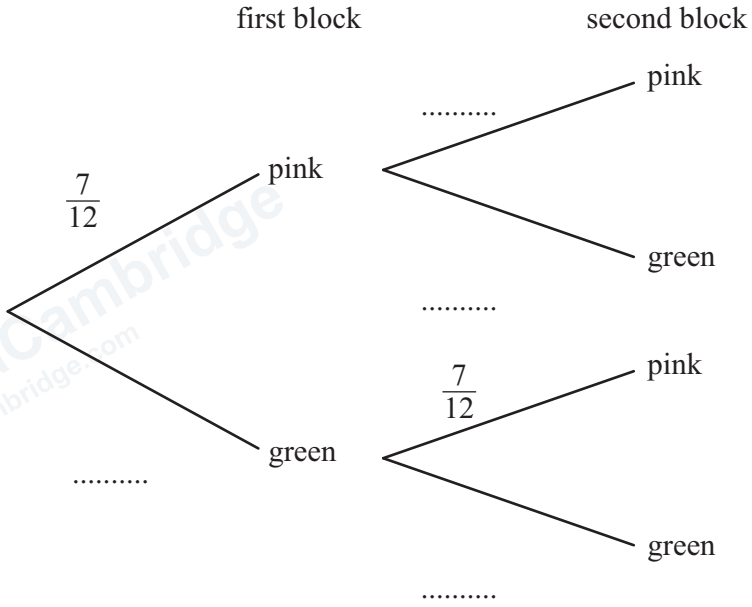

[2]

(b) Use the tree diagram to work out the probability that the two blocks are green.

..... [2]

DO NOT WRITE IN THIS MARGIN
DO NOT WRITE IN THIS MARGIN
DO NOT WRITE IN THIS MARGIN
DO NOT WRITE IN THIS MARGIN
DO NOT WRITE IN THIS MARGIN

© Cambridge University Press & Assessment 2026

GradeMax

23 The circumference of a circle is 18π cm.

Work out the radius of the circle.

..... cm [2]

24 A group of 4 children have a mean age of 11.
A fifth child joins the group, and the mean age is now 10.

Calculate the age of the fifth child.

..... years [3]

25 $\mathscr{E} = \{1, 2, 3, 4, 5, 6, 7, 8, 9\}$
$P = \{\text{prime numbers}\}$
$N = \{\text{odd numbers}\}$

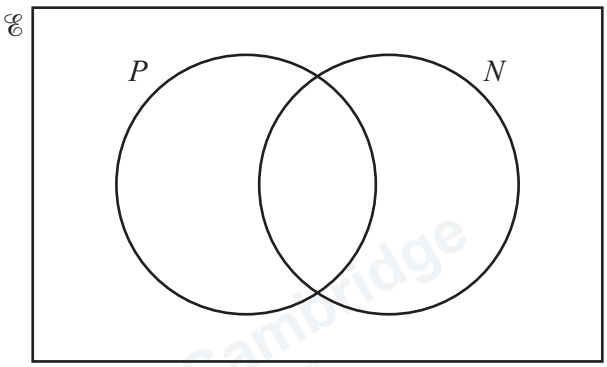

(a) Complete the Venn diagram. [2]

(b) Write down $n(P \cup N)$.

..... [1]

© Cambridge University Press & Assessment 2026

DO NOT WRITE IN THIS MARGIN
DO NOT WRITE IN THIS MARGIN
DO NOT WRITE IN THIS MARGIN
DO NOT WRITE IN THIS MARGIN
DO NOT WRITE IN THIS MARGIN

GradeMax

26 Write these numbers in standard form.

(a) 6320

..... [1]

(b) 0.0258

..... [1]

27 Work out $3\frac{1}{3} - 1\frac{3}{4}$.

Give your answer as a mixed number in its simplest form.

..... [3]

28 Make T the subject of the formula.

$Q = 3 - 4T$

$T =$ ..... [2]

DO NOT WRITE IN THIS MARGIN

© Cambridge University Press & Assessment 2026

GradeMax

29 The diagram shows three shapes, A, B and C, on a grid.

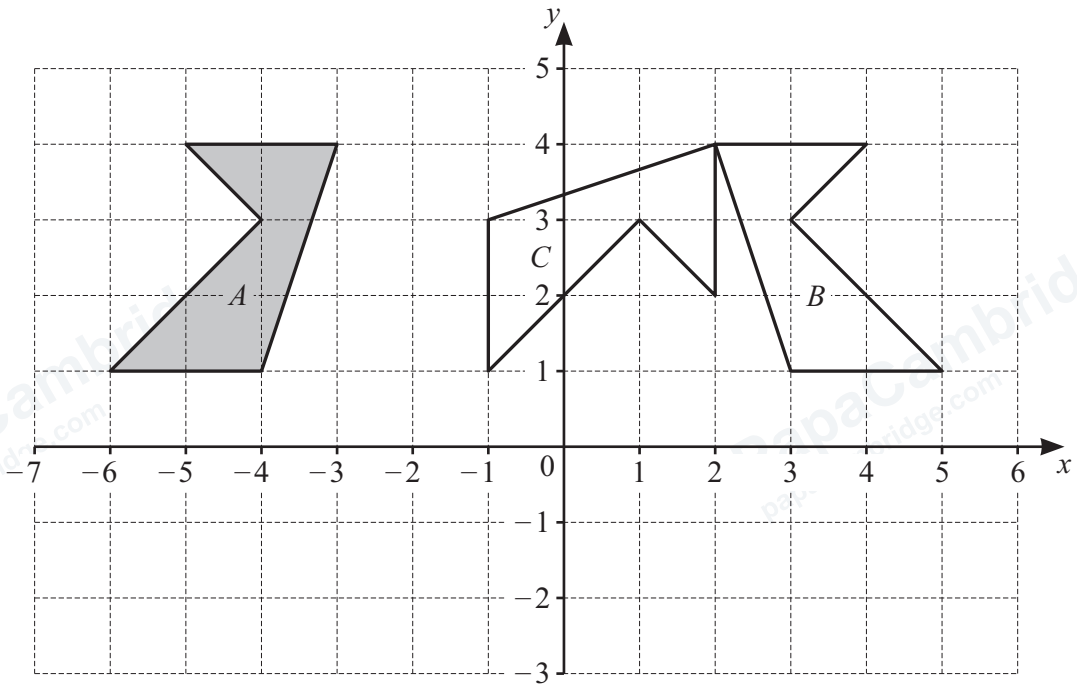

(a) Describe fully the **single** transformation that maps

(i) shape A onto shape B

.....

..... [2]

(ii) shape B onto shape C.

.....

..... [3]

(b) On the grid, draw the image of shape A after a translation by the vector $\begin{pmatrix} 1 \\ -3 \end{pmatrix}$. [2]

DO NOT WRITE IN THIS MARGIN
DO NOT WRITE IN THIS MARGIN
DO NOT WRITE IN THIS MARGIN
DO NOT WRITE IN THIS MARGIN
DO NOT WRITE IN THIS MARGIN

© Cambridge University Press & Assessment 2026

GradeMax

BLANK PAGE

DO NOT WRITE IN THIS MARGIN
DO NOT WRITE IN THIS MARGIN
DO NOT WRITE IN THIS MARGIN
DO NOT WRITE IN THIS MARGIN
DO NOT WRITE IN THIS MARGIN

Permission to reproduce items where third-party owned material protected by copyright is included has been sought and cleared where possible. Every reasonable effort has been made by the publisher (Cambridge University Press & Assessment) to trace copyright holders, but if any items requiring clearance have unwittingly been included, the publisher will be pleased to make amends at the earliest possible opportunity.

To avoid the issue of disclosure of answer-related information to candidates, all copyright acknowledgements are reproduced online in our Copyright Acknowledgements Booklet. This is produced for each series of examinations and is freely available to download at www.cambridgeinternational.org after the live examination series.

Cambridge International Education is the name of our awarding body and a part of Cambridge University Press & Assessment, which is a department of the University of Cambridge.

© Cambridge University Press & Assessment 2026