GradeMax

* 0000800000001 * DFD

CAMBRIDGE
International Education

Cambridge IGCSE™

CANDIDATE NAME

CENTRE NUMBER

CANDIDATE NUMBER

2378452624

MATHEMATICS **0580/32**

Paper 3 Calculator (Core) **May/June 2026**

1 hour 30 minutes

You must answer on the question paper.

You will need: Geometrical instruments

INSTRUCTIONS

- Answer **all** questions.
- Use a black or dark blue pen. You may use an HB pencil for any diagrams or graphs.
- Write your name, centre number and candidate number in the boxes at the top of the page.
- Write your answer to each question in the space provided.
- Do **not** use an erasable pen. Do **not** use correction fluid or tape.
- Do **not** write on any bar codes.
- You should use a scientific calculator where appropriate.
- You may use tracing paper.
- You must show all necessary working clearly.
- Give non-exact numerical answers correct to 3 significant figures, or 1 decimal place for angles in degrees, unless a different level of accuracy is specified in the question.
- For π, use either your calculator value or 3.142.

INFORMATION

- The total mark for this paper is 80.
- The number of marks for each question or part question is shown in brackets [ ].

This document has **16** pages. Any blank pages are indicated.

DC (CE/CB) 355663/3
© Cambridge University Press & Assessment 2026

[Turn over

GradeMax

List of formulas

Area, A, of triangle, base b, height h.	$A = \frac{1}{2}bh$
Area, A, of circle of radius r.	$A = \pi r^2$
Circumference, C, of circle of radius r.	$C = 2\pi r$
Curved surface area, A, of cylinder of radius r, height h.	$A = 2\pi rh$
Curved surface area, A, of cone of radius r, sloping edge l.	$A = \pi rl$
Surface area, A, of sphere of radius r.	$A = 4\pi r^2$
Volume, V, of prism, cross-sectional area A, length l.	$V = Al$
Volume, V, of pyramid, base area A, height h.	$V = \frac{1}{3}Ah$
Volume, V, of cylinder of radius r, height h.	$V = \pi r^2 h$
Volume, V, of cone of radius r, height h.	$V = \frac{1}{3}\pi r^2 h$
Volume, V, of sphere of radius r.	$V = \frac{4}{3}\pi r^3$

PapaCambridge papacambridge.com

DO NOT WRITE IN THIS MARGIN

© Cambridge University Press & Assessment 2026

GradeMax

DO NOT WRITE IN THIS MARGIN
DO NOT WRITE IN THIS MARGIN
DO NOT WRITE IN THIS MARGIN
DO NOT WRITE IN THIS MARGIN
DO NOT WRITE IN THIS MARGIN

1 Write the number four hundred thousand and fifty-three in figures.

..... [1]

2 **(a)** Write down the multiple of 9 between 50 and 60.

..... [1]

(b) Write down all the common factors of 20 and 30.

..... [2]

3 A vase costs \$5.45 .
Tim has \$35.

Work out the maximum number of vases Tim can buy and the change he receives.

number of vases .....

change \$ .....
[3]

4 Calculate.

(a) $\sqrt[3]{1.728}$

..... [1]

(b) $\dfrac{18}{0.2^2 - 0.36}$

..... [1]

© Cambridge University Press & Assessment 2026

GradeMax

5 There are 4 adults and 3 children in a room.

The height of the shortest adult is 1.59 m.
The range of the adults' heights is 0.25 m.

The height of the tallest child is 1.43 m.
The range of the children's heights is 0.38 m.

(a) Work out the range of the heights of the 7 people.

..... m [3]

(b) Write down the median height of the 7 people.

..... m [1]

6 Explain why 39 is **not** a prime number.

..... [1]

7 Sian uses 2.7 litres of paint to cover $\frac{3}{5}$ of a wall.

Work out the total amount of paint she uses to cover the whole wall.

..... litres [2]

DO NOT WRITE IN THIS MARGIN
DO NOT WRITE IN THIS MARGIN
DO NOT WRITE IN THIS MARGIN
DO NOT WRITE IN THIS MARGIN
DO NOT WRITE IN THIS MARGIN

© Cambridge University Press & Assessment 2026

GradeMax

8 The scale drawing shows the position of a town, *T*.
The scale is 1 centimetre represents 20 kilometres.



scale: 1 cm to 20 km

A village, *V*, is 94 km from *T* on a bearing of 112°.

Mark the position of *V* on the map.

[2]

9 Pip changes 500 euros into dollars when the exchange rate is \$1 = 0.95 euros.

Calculate the amount Pip receives.

\$ ..... [1]

10 Dave invests \$8500 at a rate of 4.5% per year simple interest.

Calculate the total interest earned at the end of 3 years.

\$ ..... [2]

© Cambridge University Press & Assessment 2026

DO NOT WRITE IN THIS MARGIN
DO NOT WRITE IN THIS MARGIN
DO NOT WRITE IN THIS MARGIN
DO NOT WRITE IN THIS MARGIN
DO NOT WRITE IN THIS MARGIN

11 A cuboid has length 10.8 cm, width 3.7 cm and height 4.6 cm.

Work out the volume of the cuboid.
Give your answer correct to 1 decimal place.

..... cm^3 [2]

12 Factorise.

$x^2 + 7x$

..... [1]

13 **(a)** $8^y = 1$

Find the value of y.

$y =$ ..... [1]

(b) $x^4 \times x^5 = x^w$

Find the value of w.

$w =$ ..... [1]

DO NOT WRITE IN THIS MARGIN

© Cambridge University Press & Assessment 2026

GradeMax

14 There are 60 counters in a jar.
Kan adds C counters into the jar.
Mo adds $2C + 7$ counters into the jar.

(a) Write an expression, in terms of C, for the number of counters that are now in the jar.
Give your answer in its simplest form.

..... [2]

(b) Kan and Mo share the counters equally.

(i) Write down an expression, in terms of C, for the number of counters they each receive.

..... [1]

(ii) They each receive 86 counters.

Work out the value of C.

$C =$ ..... [4]

DO NOT WRITE IN THIS MARGIN
DO NOT WRITE IN THIS MARGIN
DO NOT WRITE IN THIS MARGIN
DO NOT WRITE IN THIS MARGIN
DO NOT WRITE IN THIS MARGIN

© Cambridge University Press & Assessment 2026

15 The nth term of a sequence is $3n - 1$.

(a) Write down the first 3 terms in this sequence.

....., ..., ... [1]

(b) 327 and 331 are **not** in the sequence with nth term $3n - 1$.

Write down all the numbers from the list that **are** in the sequence.

325 326 327 328 329 330 331 332

..... [2]

16 The probability that a team wins a match is 0.4 .

(a) The team plays 20 matches.

Work out the expected number of matches they win.

..... [1]

(b)

result	win	lose	draw
probability	0.4		

The probability that the team loses is three times the probability that it draws.

Complete the table.

[3]

DO NOT WRITE IN THIS MARGIN

17 The diagram shows a compound shape made from two rectangles.

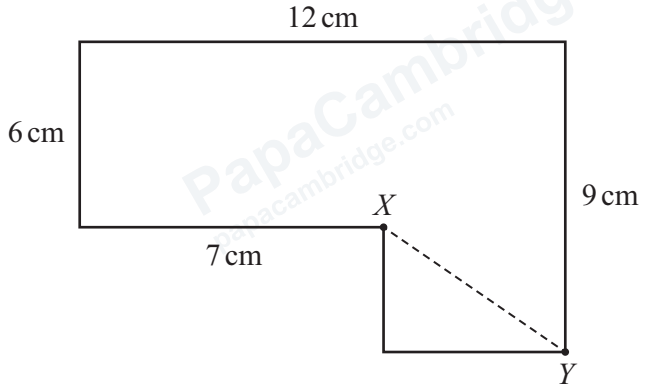

NOT TO SCALE

(a) Work out the perimeter of the shape.

..... cm [2]

(b) Calculate the length of the straight line from X to Y.

..... cm [2]

(c) A square has the same area as the compound shape.

Calculate the side length of the square.

..... cm [3]

DO NOT WRITE IN THIS MARGIN
DO NOT WRITE IN THIS MARGIN
DO NOT WRITE IN THIS MARGIN
DO NOT WRITE IN THIS MARGIN
DO NOT WRITE IN THIS MARGIN

18 **(a)** Complete the table of values for $y = -x^2 + 3x + 5$.

x	−2	−1	0	1	2	3	4	5
y	−5					5		−5

[3]

(b) On the grid, draw the graph of $y = -x^2 + 3x + 5$ for $-2 \leqslant x \leqslant 5$.

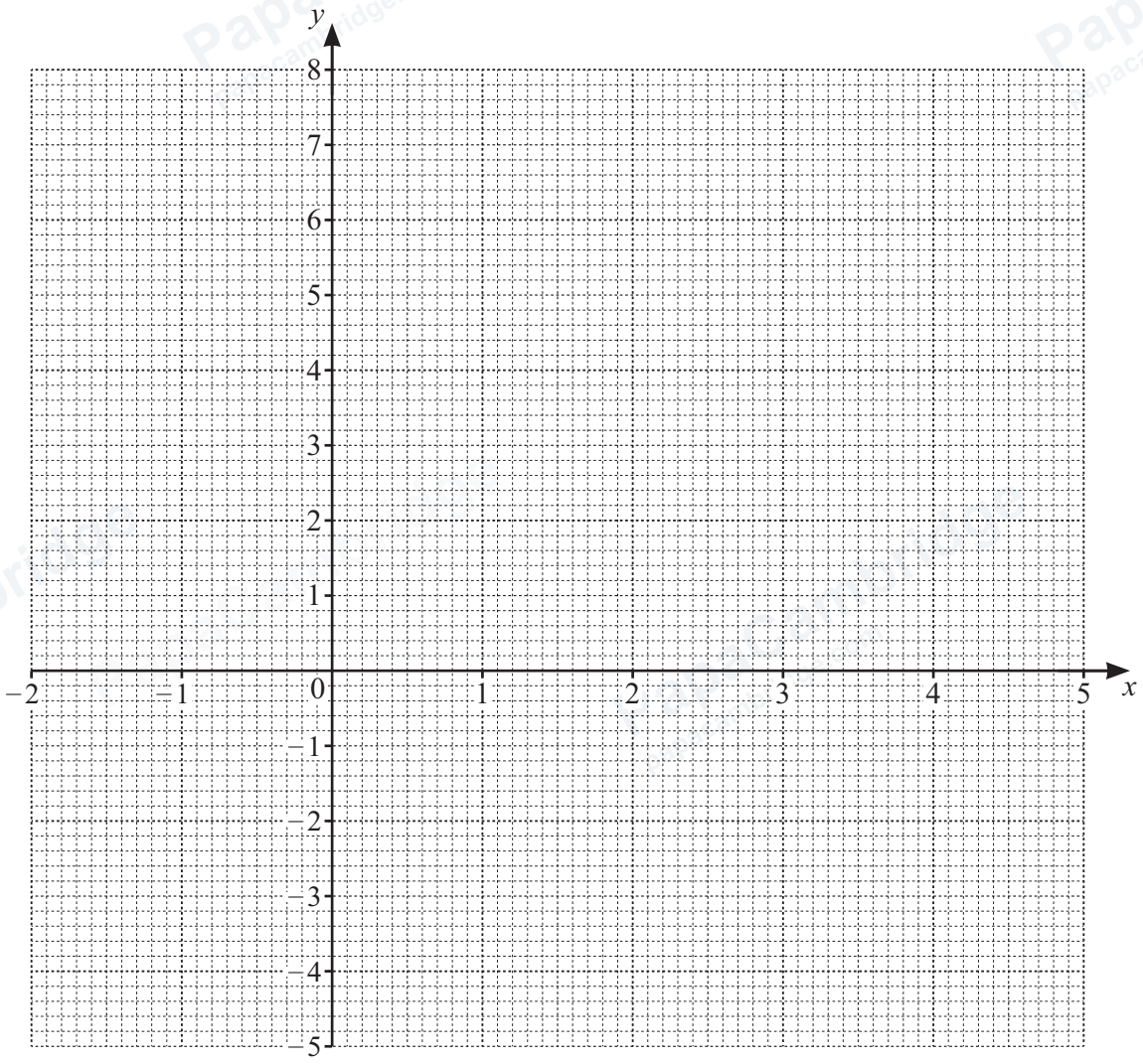

[4]

DO NOT WRITE IN THIS MARGIN
DO NOT WRITE IN THIS MARGIN
DO NOT WRITE IN THIS MARGIN
DO NOT WRITE IN THIS MARGIN
DO NOT WRITE IN THIS MARGIN

© Cambridge University Press & Assessment 2026

GradeMax

(c) Write down the coordinates of the highest point on the graph.

(..... , ...) [1]

(d) Use your graph to solve $-x^2 + 3x + 5 = 0$.

$x =$ ..... or $x =$ ..... [2]

19 Zac asks some students if they prefer algebra, geometry or statistics.

35% of the students prefer algebra.
$\frac{2}{9}$ of the students prefer geometry.
The rest of the students prefer statistics.

Use the information to complete the pie chart.

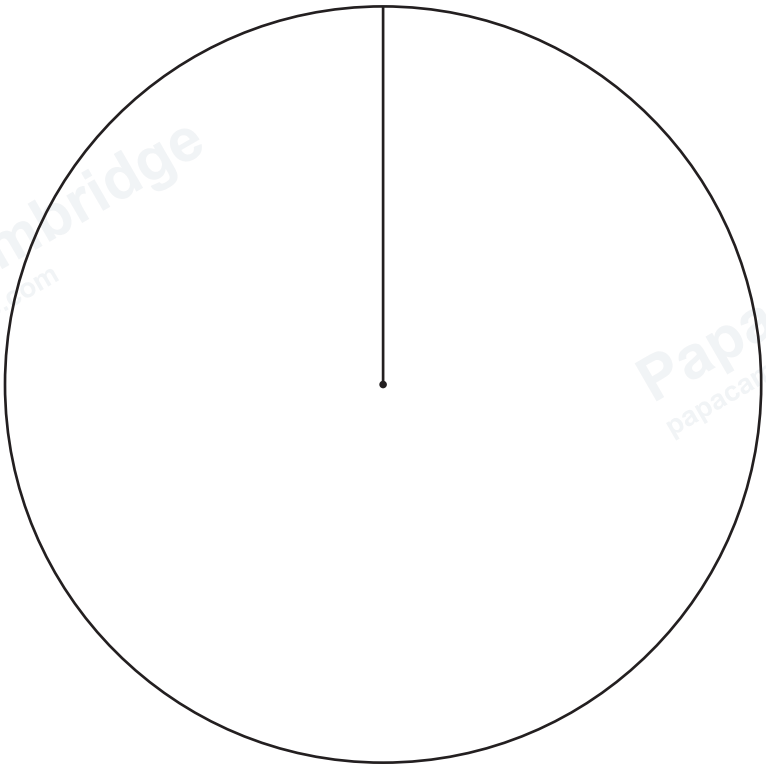

[4]

DO NOT WRITE IN THIS MARGIN
DO NOT WRITE IN THIS MARGIN
DO NOT WRITE IN THIS MARGIN
DO NOT WRITE IN THIS MARGIN
DO NOT WRITE IN THIS MARGIN

PapaCambridge papacambridge.com

20

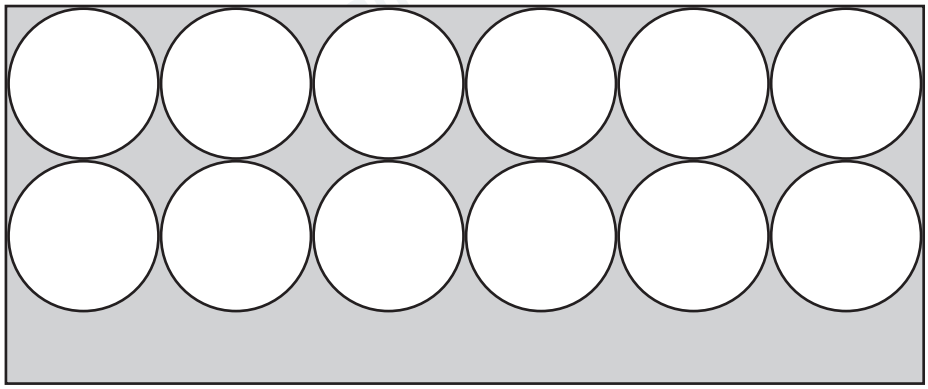

NOT TO SCALE

25 cm

60 cm

A metal rectangle is 25 cm by 60 cm.
12 circles, each with radius 5 cm, are cut out of the metal.

Calculate the percentage of the metal remaining.

..... % [4]

DO NOT WRITE IN THIS MARGIN
DO NOT WRITE IN THIS MARGIN
DO NOT WRITE IN THIS MARGIN
DO NOT WRITE IN THIS MARGIN
DO NOT WRITE IN THIS MARGIN

© Cambridge University Press & Assessment 2026

GradeMax

21 Sam leaves home at 1430 and drives 106 km to town *A*.
His average speed is 40 km/h.

Calculate the time he arrives at town *A*.

..... [3]

22 Find the lowest common multiple (LCM) of 54 and 90.

..... [2]

23 The mass, *m* grams, of some butter is 650 grams, correct to the nearest 50 grams.

Complete this statement about the value of *m*.

..... $\leqslant m <$ ..... [2]

24 A sphere has radius 6 cm.

Work out the surface area of the sphere.
Give the units of your answer.

.... [3]

DO NOT WRITE IN THIS MARGIN
DO NOT WRITE IN THIS MARGIN
DO NOT WRITE IN THIS MARGIN
DO NOT WRITE IN THIS MARGIN
DO NOT WRITE IN THIS MARGIN

© Cambridge University Press & Assessment 2026

25 Draw a ring around any irrational numbers that are in the list.

$331776^{0.25}$ $\sqrt{0.4}$ $\frac{7}{13}$ 6432.89^{17}

[1]

26

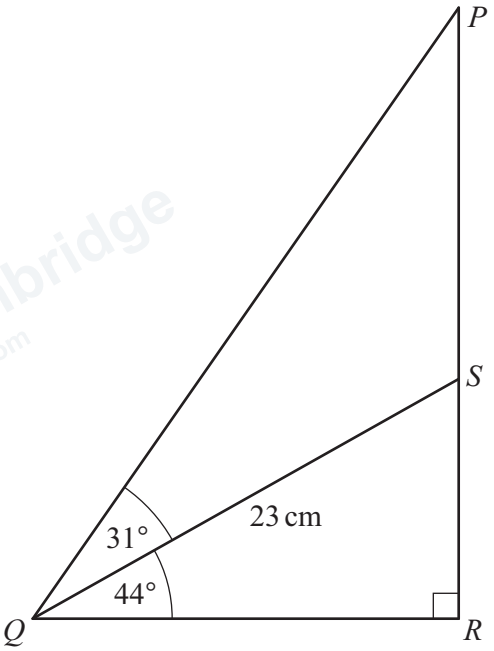

NOT TO SCALE

The diagram shows a right-angled triangle, PQR.
S lies on side PR.
Angle $PQS = 31°$ and angle $RQS = 44°$.
$QS = 23$ cm.

Calculate PR.

$PR =$ ..... cm [4]

© Cambridge University Press & Assessment 2026

DO NOT WRITE IN THIS MARGIN
DO NOT WRITE IN THIS MARGIN
DO NOT WRITE IN THIS MARGIN
DO NOT WRITE IN THIS MARGIN
DO NOT WRITE IN THIS MARGIN

GradeMax

BLANK PAGE

DO NOT WRITE IN THIS MARGIN
DO NOT WRITE IN THIS MARGIN
DO NOT WRITE IN THIS MARGIN
DO NOT WRITE IN THIS MARGIN
DO NOT WRITE IN THIS MARGIN

PapaCambridge
papacambridge.com

© Cambridge University Press & Assessment 2026

GradeMax

BLANK PAGE

DO NOT WRITE IN THIS MARGIN
DO NOT WRITE IN THIS MARGIN
DO NOT WRITE IN THIS MARGIN
DO NOT WRITE IN THIS MARGIN
DO NOT WRITE IN THIS MARGIN

Permission to reproduce items where third-party owned material protected by copyright is included has been sought and cleared where possible. Every reasonable effort has been made by the publisher (Cambridge University Press & Assessment) to trace copyright holders, but if any items requiring clearance have unwittingly been included, the publisher will be pleased to make amends at the earliest possible opportunity.

To avoid the issue of disclosure of answer-related information to candidates, all copyright acknowledgements are reproduced online in our Copyright Acknowledgements Booklet. This is produced for each series of examinations and is freely available to download at www.cambridgeinternational.org after the live examination series.

Cambridge International Education is the name of our awarding body and a part of Cambridge University Press & Assessment, which is a department of the University of Cambridge.

© Cambridge University Press & Assessment 2026