GradeMax

Cambridge Assessment International Education

Cambridge IGCSE™

PHYSICS **0625/12**

Paper 1 Multiple Choice (Core) **February/March 2023**

45 minutes

You must answer on the multiple choice answer sheet.

You will need: Multiple choice answer sheet
Soft clean eraser
Soft pencil (type B or HB is recommended)

* 1 2 8 7 9 2 5 0 7 1 *

INSTRUCTIONS

- There are **forty** questions on this paper. Answer **all** questions.
- For each question there are four possible answers **A**, **B**, **C** and **D**. Choose the **one** you consider correct and record your choice in soft pencil on the multiple choice answer sheet.
- Follow the instructions on the multiple choice answer sheet.
- Write in soft pencil.
- Write your name, centre number and candidate number on the multiple choice answer sheet in the spaces provided unless this has been done for you.
- Do **not** use correction fluid.
- Do **not** write on any bar codes.
- You may use a calculator.
- Take the weight of 1.0 kg to be 9.8 N (acceleration of free fall = 9.8 m / s^2).

INFORMATION

- The total mark for this paper is 40.
- Each correct answer will score one mark.
- Any rough working should be done on this question paper.

IB23 03_0625_12/3RP
© UCLES 2023

[Turn over

1 A measuring cylinder contains water.

The diagrams show the measuring cylinder before and after some of the water is poured into a beaker.

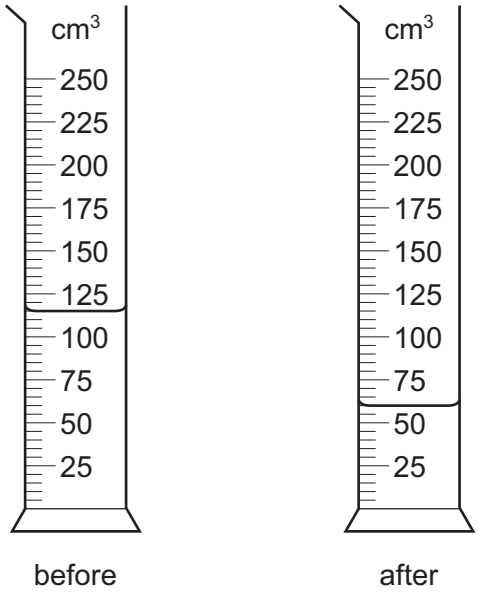

How much water has been poured into the beaker?

A 51 cm^3 **B** 52 cm^3 **C** 55 cm^3 **D** 63 cm^3

2 The diagram shows the speed–time graph for a car.

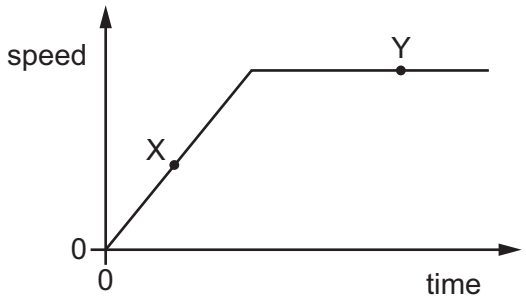

Which row describes the motion of the car at point X and at point Y?

	point X	point Y
A	at rest	moving with constant speed
B	moving with constant speed	at rest
C	moving with changing speed	at rest
D	moving with changing speed	moving with constant speed

GradeMax

3 A ball is dropped in a vacuum from a height of 4.0 m above the surface of Mars. The acceleration of the ball at a height of 2.0 m is 3.8 m / s^2.

What is the acceleration of the ball at a height of 1.0 m above the surface of Mars?

A 1.9 m / s^2 **B** 3.8 m / s^2 **C** 5.7 m / s^2 **D** 7.6 m / s^2

4 Two objects are placed on a balance, one on each side, as shown.

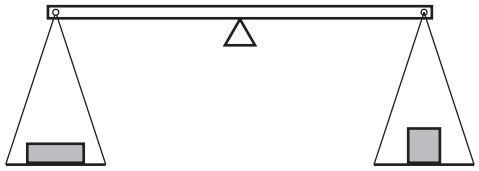

Which properties of the objects can be compared using the balance?

A weight, mass and volume

B weight and mass only

C volume and density

D density only

5 A rectangular swimming pool is 50 m long and 25 m wide.

It contains water at a depth of 2 m.

The density of the water is 1000 kg / m^3.

What is the mass of the water in the pool?

A 2.5 kg **B** 2500 kg **C** 77 000 kg **D** 2 500 000 kg

© UCLES 2023

[Turn over

6 An object is rising vertically at constant speed through water. There are three vertical forces acting on it: the weight *W*, the drag force *D*, and the upward force *U*.

Which diagram shows the magnitude and direction of the vertical forces acting on the object?

A

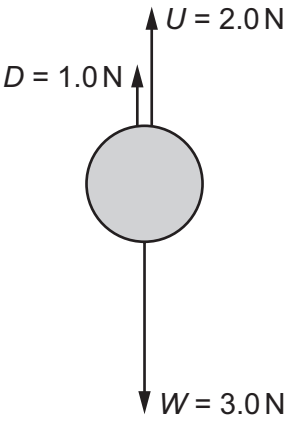

B

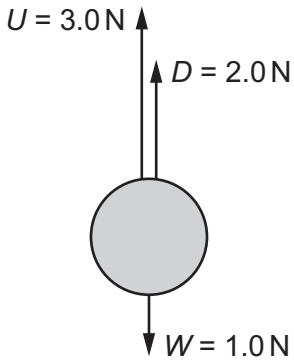

C

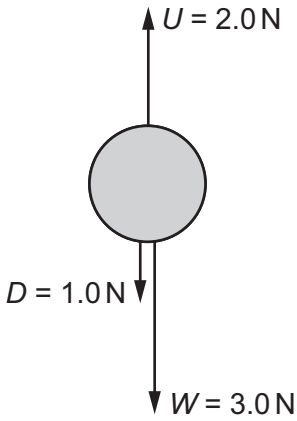

D

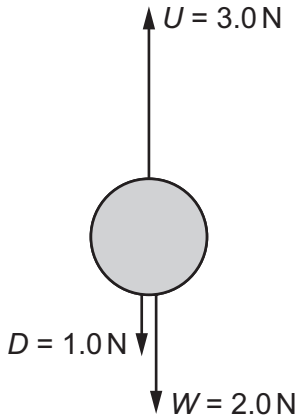

7 Which force produces heating during contact with a moving object?

A weight

B friction

C electrostatic force

D magnetic force

8 A metre rule is balanced at its midpoint.

It remains balanced when a 3.0 N load is hung from the 40 cm mark and a second load is hung from the 80 cm mark.

What is the weight of the second load?

A 1.0 N **B** 1.5 N **C** 3.0 N **D** 9.0 N

© UCLES 2023

GradeMax

9 A student measures the length of a spring. She then attaches different weights to the spring. She measures the length of the spring for each weight.

The table shows her results.

weight / N	length / mm
0	520
1.0	524
2.0	528
3.0	533
4.0	537
5.0	540

What is the extension of the spring with a weight of 3.0 N attached to it?

A 4 mm **B** 5 mm **C** 12 mm **D** 13 mm

10 Which power station produces the greatest atmospheric pollution for each unit of energy generated?

A a gas fired power station

B a hydroelectric power station

C a nuclear power station

D a wind farm

11 A 500 N weight is raised through a height of 5 cm.

How much work is done by the force?

A 25 J **B** 100 J **C** 2500 J **D** 10 000 J

12 What is the unit of power?

A joule

B newton

C volt

D watt

© UCLES 2023

[Turn over

13 The diagram shows a rectangular block of weight 16 N. It is resting on a flat surface.

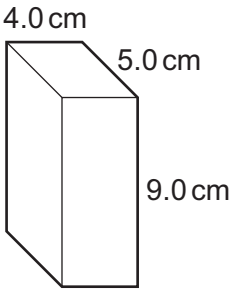

What is the pressure at the base of the block due to its weight?

A $0.089\,N/cm^2$

B $0.36\,N/cm^2$

C $0.80\,N/cm^2$

D $320\,N/cm^2$

14 A piston traps a mass of gas inside a cylinder. Initially, the piston is halfway along the length of the cylinder.

The piston is now moved towards the open end of the cylinder. The temperature of the gas remains constant.

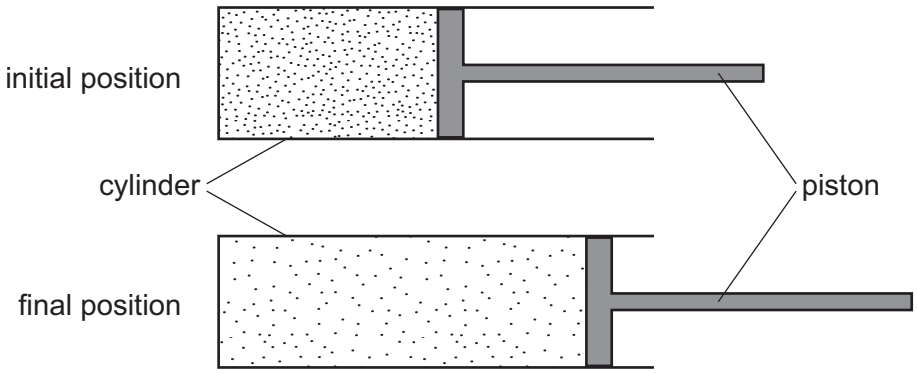

How are the density and the pressure of the gas affected by moving the piston?

	density	pressure
A	decreases	decreases
B	decreases	unchanged
C	increases	decreases
D	increases	unchanged

GradeMax

15 Which statement describes what happens to air particles when the air is heated?

A The particles move more slowly.

B The particles move more quickly.

C The particles move closer together.

D The particles vibrate faster.

16 What happens when the temperature of a liquid increases?

A The mass of the liquid increases, making the liquid less dense.

B The mass of the liquid increases, making the liquid more dense.

C The volume of the liquid increases, making the liquid less dense.

D The volume of the liquid increases, making the liquid more dense.

17 In which states of matter can thermal energy be transferred by convection?

A in gases, liquids and solids

B in gases and liquids only

C in gases and solids only

D in liquids only

18 A transverse wave moves along a rope.

The diagram shows the position of the rope at one particular time.

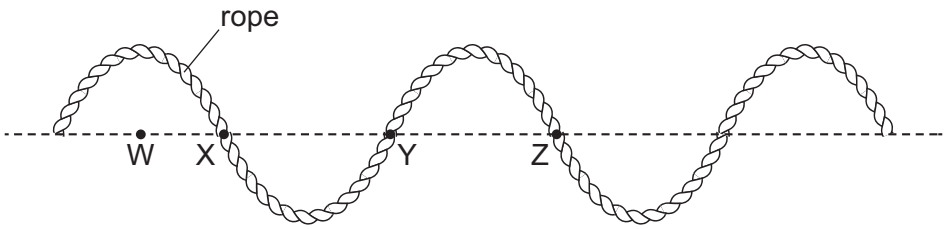

Which two labelled points are one wavelength apart?

A W and X **B** W and Z **C** X and Z **D** Y and Z

GradeMax

19 The diagram shows a ray of light being reflected from a plane mirror.

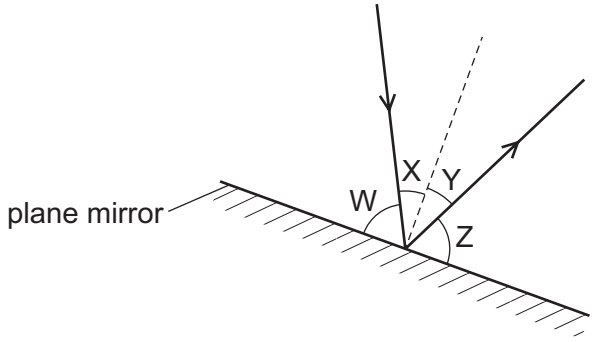

Which row identifies the angles of incidence and reflection?

	angle of incidence	angle of reflection
A	W	Y
B	W	Z
C	X	Y
D	X	Z

20 Blue light has a typical wavelength of 5.0×10^{-7} m and frequency of 0.60×10^{15} Hz.

Which row gives a typical wavelength and frequency for red light?

	wavelength	frequency
A	2.4×10^{-7} m	0.40×10^{15} Hz
B	2.4×10^{-7} m	1.3×10^{15} Hz
C	6.9×10^{-7} m	0.40×10^{15} Hz
D	6.9×10^{-7} m	1.3×10^{15} Hz

© UCLES 2023

21 Which diagram shows what happens when a ray of white light passes through a prism?

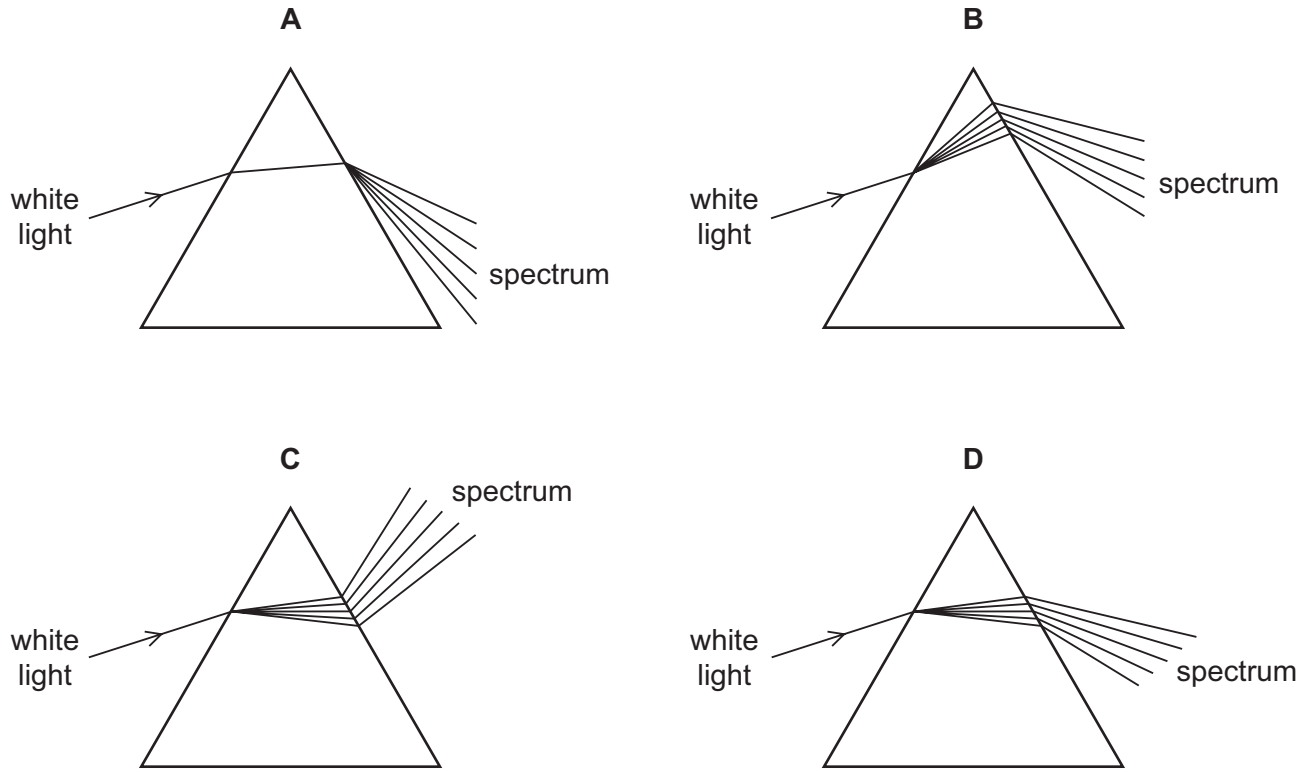

22 A television (TV) station transmits a signal to a television receiving dish.

The television has an on / off indicator light.

The television is switched on by a remote control which changes the indicator light from red to green.

Which electromagnetic wave used in these actions has the longest wavelength?

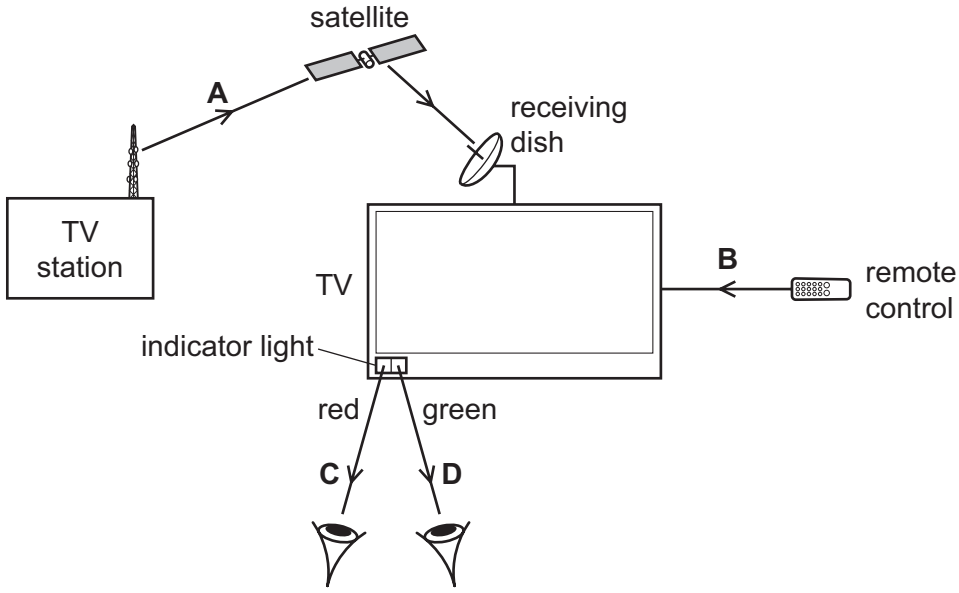

GradeMax

23 A sound wave has a wavelength of 0.024 m.

What is the frequency of this sound wave and is it audible to humans?

	frequency / Hz	audible to humans
A	140	yes
B	140	no
C	14 000	yes
D	14 000	no

24 The diagram shows a bar magnet at rest on a smooth horizontal surface. A length of soft-iron wire is held parallel to the magnet.

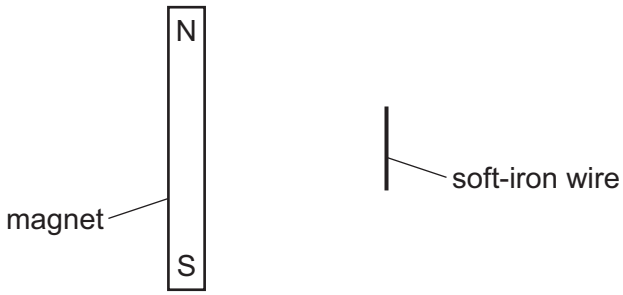

The wire is released.

What happens?

A The wire moves away from the magnet.

B The wire moves towards the magnet.

C The wire's centre stays in its present position and the wire rotates through 90° in a clockwise direction.

D The wire's centre stays in its present position and the wire rotates through 90° in an anticlockwise direction.

25 A man walks across a carpet. He becomes negatively charged by friction with the carpet.

What happens as he touches a metal object connected to the Earth?

A The man gains electrons.

B The man loses electrons.

C The man gains protons.

D The man loses protons.

© UCLES 2023

GradeMax

26 A laboratory has a standard wire of known resistance. It also has other wires, made from the same material as the standard wire, but of different lengths and diameters.

Which wire would definitely have a resistance of less than the standard wire?

	wire length	wire diameter
A	longer	larger
B	longer	smaller
C	shorter	larger
D	shorter	smaller

27 The diagram shows a circuit.

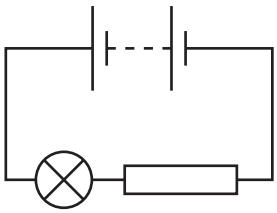

Which energy transfers occur?

A battery → lamp → surrounding air

B battery → surrounding air → battery

C lamp → surrounding air → battery

D surrounding air → lamp → battery

© UCLES 2023

[Turn over

GradeMax

28 X, Y and Z are lamps.

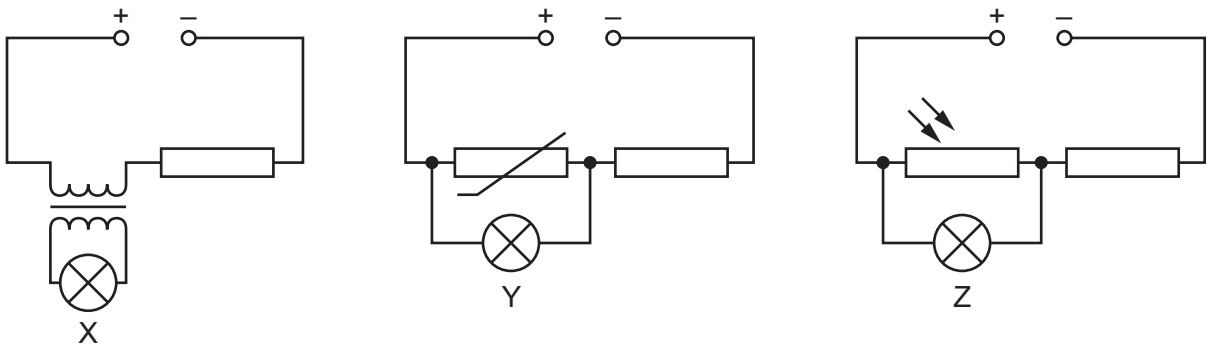

In which lamps is there a current?

	X	Y	Z
A	✓	✗	✓
B	✓	✗	✗
C	✗	✓	✓
D	✗	✓	✗

key

✓ = current in lamp

✗ = no current in lamp

29 The diagram shows a circuit.

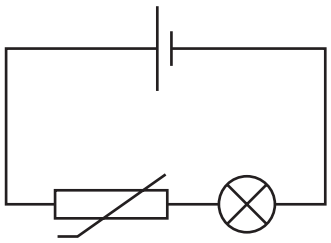

Which change causes the bulb in the circuit to become brighter?

A a decrease in light intensity

B a decrease in temperature

C an increase in light intensity

D an increase in temperature

© UCLES 2023

GradeMax

30 The current in a kettle is 10 A and the kettle is protected by a 13 A fuse.

The owner of the kettle replaces the 13 A fuse with a 3 A fuse.

What happens when the kettle is switched on?

A The fuse melts and the kettle might be damaged.

B The fuse melts and the kettle is undamaged.

C The fuse does not melt and the kettle works correctly.

D The fuse does not melt but the kettle fails to work.

31 A wire is moved down in a direction perpendicular to the magnetic field.

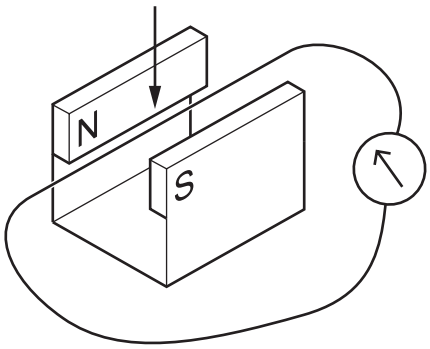

Three changes are suggested.

1 The speed of the movement of the wire is increased.

2 The magnetic field strength is decreased.

3 The direction of the magnetic field is reversed.

Which changes increase the electromotive force (e.m.f.) induced in the wire?

A 1 and 3 **B** 1 only **C** 2 and 3 **D** 3 only

© UCLES 2023

[Turn over

GradeMax

32 In an experiment, a wire is held above a compass needle as shown.

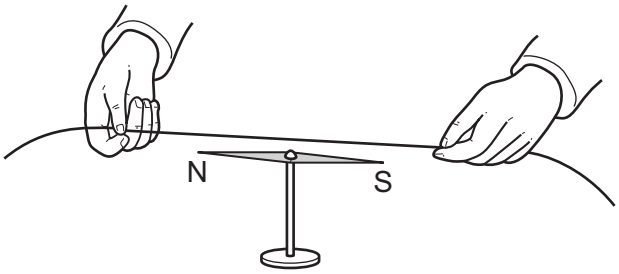

An electric current is switched on in the wire and the compass needle is deflected.

Which row explains why this happens and then describes what happens when the current is reversed?

	why this happens	what happens when the current is reversed
A	there is a magnetic field inside the wire	the compass needle deflects in the opposite direction
B	there is a magnetic field inside the wire	the compass needle remains deflected in the same direction
C	there is a magnetic field around the wire	the compass needle deflects in the opposite direction
D	there is a magnetic field around the wire	the compass needle remains deflected in the same direction

33 Over time, the strength of the magnets in an electric motor decreases.

Which row describes **two** ways to keep the motor running at its original speed?

	current in the coil	number of turns on the coil
A	decrease	decrease
B	decrease	increase
C	increase	decrease
D	increase	increase

© UCLES 2023

GradeMax

34 A rechargeable battery contains lithium.

The lithium exists as positive lithium ions.

How does an ion of lithium differ from an atom of lithium?

A The ion has fewer electrons orbiting the nucleus.

B The ion has more electrons orbiting the nucleus.

C The nucleus of the ion has less charge.

D The nucleus of the ion is more positively charged.

35 An iron nuclide is represented by the symbol shown.

$$^{56}_{26}\mathrm{Fe}$$

Which statements about a nucleus of this iron nuclide are correct?

1 The nucleus contains 56 neutrons.

2 The nucleon number is 30.

3 The proton number is 26.

A 1 and 2 **B** 1 and 3 **C** 2 and 3 **D** 3 only

36 What is an artificial source of background radiation?

A X-ray machines in hospitals

B radon gas from rocks

C cosmic rays from the Sun

D plants and other living things

37 A sample of a radioactive isotope has an initial rate of emission of 128 counts per minute and a half-life of 4 days.

How long will it take for the rate of emission to fall to 32 counts per minute?

A 2 days **B** 4 days **C** 8 days **D** 12 days

38 Approximately how long does it take for the Moon to make one complete orbit of the Earth?

A 24 hours

B 1 month

C 1 season

D 1 year

© UCLES 2023

GradeMax

39 The Sun has a mass of 2.0×10^{30} kg.

Which element accounts for most of this mass?

A carbon

B hydrogen

C oxygen

D uranium

40 The nearest star to the Sun is Proxima Centauri at a distance of 4.2 light years.

Which statements are correct?

1 Telescope images of Proxima Centauri show it as it was 4.2 years ago.

2 If a spacecraft near Proxima Centauri sent a radio message to the Earth, it would take 4.2 years to arrive.

3 Proxima Centauri is outside the Milky Way galaxy.

A 1, 2 and 3 **B** 1 and 2 only **C** 1 and 3 only **D** 2 and 3 only

Permission to reproduce items where third-party owned material protected by copyright is included has been sought and cleared where possible. Every reasonable effort has been made by the publisher (UCLES) to trace copyright holders, but if any items requiring clearance have unwittingly been included, the publisher will be pleased to make amends at the earliest possible opportunity.

To avoid the issue of disclosure of answer-related information to candidates, all copyright acknowledgements are reproduced online in the Cambridge Assessment International Education Copyright Acknowledgements Booklet. This is produced for each series of examinations and is freely available to download at www.cambridgeinternational.org after the live examination series.

Cambridge Assessment International Education is part of Cambridge Assessment. Cambridge Assessment is the brand name of the University of Cambridge Local Examinations Syndicate (UCLES), which is a department of the University of Cambridge.

© UCLES 2023