GradeMax

Cambridge Assessment International Education

Cambridge IGCSE™

CANDIDATE NAME

CENTRE NUMBER | | | | | |

CANDIDATE NUMBER | | | | |

6416158931

PHYSICS **0625/62**

Paper 6 Alternative to Practical **February/March 2023**

1 hour

You must answer on the question paper.

No additional materials are needed.

INSTRUCTIONS

- Answer **all** questions.
- Use a black or dark blue pen. You may use an HB pencil for any diagrams or graphs.
- Write your name, centre number and candidate number in the boxes at the top of the page.
- Write your answer to each question in the space provided.
- Do **not** use an erasable pen or correction fluid.
- Do **not** write on any bar codes.
- You may use a calculator.
- You should show all your working and use appropriate units.

INFORMATION

- The total mark for this paper is 40.
- The number of marks for each question or part question is shown in brackets [ ].

This document has **16** pages. Any blank pages are indicated.

DC (DE/CGW) 322310/2
© UCLES 2023

[Turn over

GradeMax

1 A student determines the diameter of a marble by two methods and calculates the density of the material from which the marble is made.

Some marbles are shown full size in Fig. 1.1.

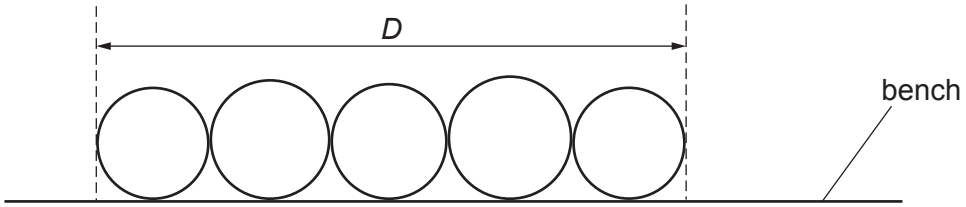

Fig. 1.1

Method 1

(a) (i) On Fig. 1.1, measure the length *D*.

D = ... cm

Using your value of *D*, calculate the average diameter d_1 of **one** marble.

d_1 = ... cm
[2]

(ii) Suggest why it is more accurate, when using a ruler, to measure *D* for **five** marbles rather than measure the diameter of a single marble.

.....

.....

.....
[1]

© UCLES 2023

GradeMax

Method 2

(b) Fig. 1.2 shows two wooden blocks and one of the marbles.

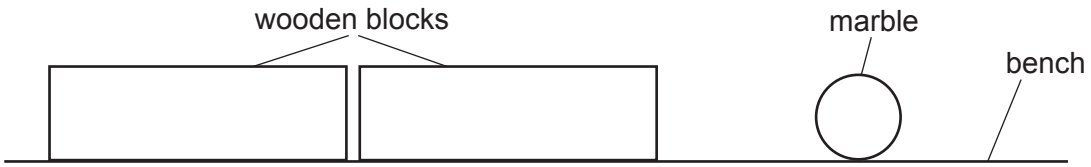

Fig. 1.2

Describe how the student uses the two blocks and the marble to determine a new accurate value for the diameter of a marble.
Draw a diagram to show the arrangement.
Describe clearly how the student ensures that the value for the diameter of a marble is as accurate as possible.

.....

.....

..... [2]

(c) **(i)** The student uses the top pan balance as shown in Fig. 1.3 to measure the mass of the five marbles.
He measures the mass M_0 of a beaker without the marbles and then measures the mass M_5 of the same beaker containing the marbles.

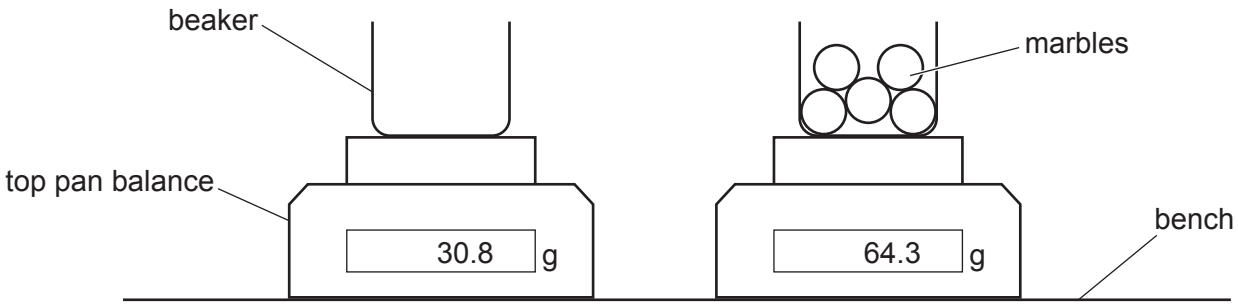

Fig. 1.3

Record the values of M_0 and M_5 as shown on the top pan balance in Fig. 1.3.

M_0 = ... g

M_5 = ... g

© UCLES 2023

[Turn over

GradeMax

Use these values to calculate the average mass m of **one** marble.

m = ... g [1]

(ii) The student pours water into a measuring cylinder.

He records the reading V_1 of the water level in the measuring cylinder.

V_1 = 26 ..... cm^3

The student places the five marbles into the water in the measuring cylinder as shown in Fig. 1.4.

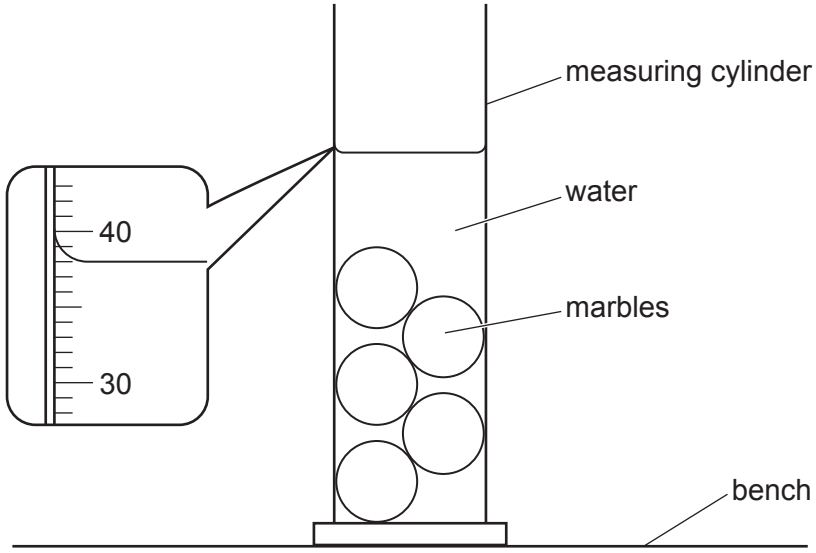

Fig. 1.4

Record the new reading V_2 of the water level in the measuring cylinder shown in Fig. 1.4.

V_2 = ... cm^3 [1]

(iii) Calculate a value for the average volume V of **one** marble. Use the values from **(c)(ii)** and the equation

$$V = \frac{V_2 - V_1}{5}.$$

V = ... cm^3 [1]

© UCLES 2023

GradeMax

(iv) Calculate a value for the density ρ of the material from which the marble is made. Use your values of m from **(c)(i)**, V from **(c)(iii)** and the equation

$$\rho = \frac{m}{V}.$$

ρ = ... g / cm^3 [1]

(d) Describe **one** possible source of inaccuracy in the method described in **(c)** and suggest **one** improvement to reduce its effect.

source of inaccuracy .....

.....

improvement .....

.....

[2]

[Total: 11]

GradeMax

2 A student investigates the cooling of hot water from different initial temperatures.

She uses the apparatus shown in Fig. 2.1.

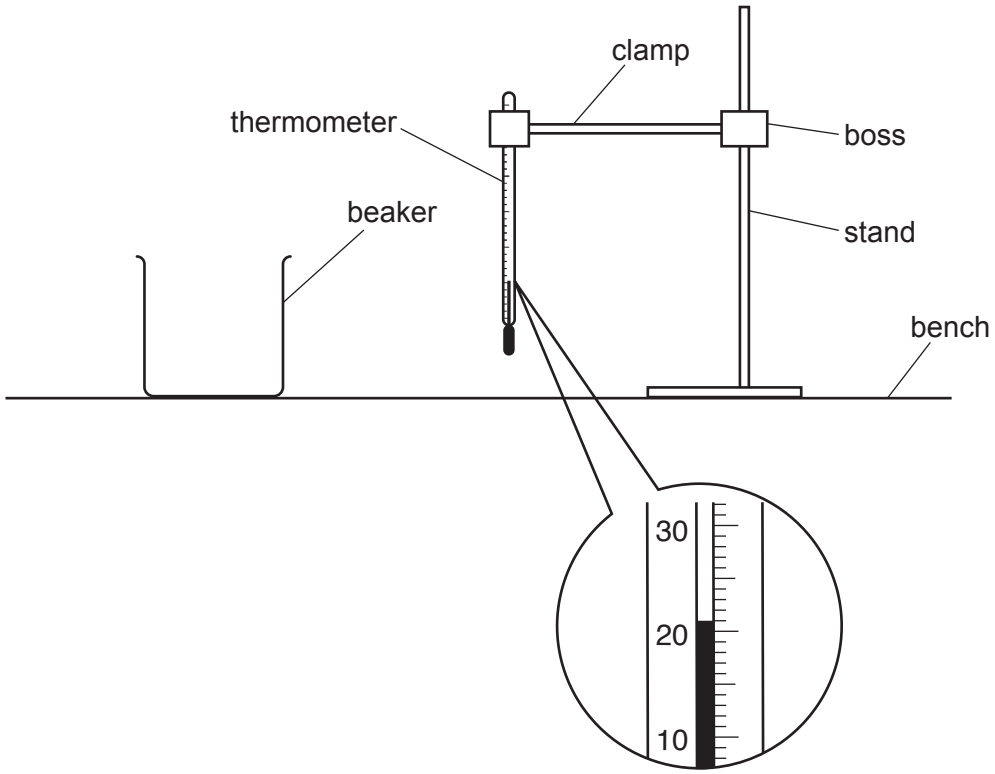

Fig. 2.1

(a) (i) The student measures the room temperature.
Record room temperature θ_R shown on the thermometer in Fig. 2.1.

θ_R = ... °C [1]

(ii) Describe **one** precaution that the student takes to ensure that this temperature reading is as accurate as possible.

.....

..... [1]

(b) Experiment A

The student pours a volume of 100 cm^3 of hot water into the beaker and records the temperature θ_A at time t = 0 s.
She records the temperature of the water in the beaker every 30 s.

Her readings for **Experiment A** are shown in Table 2.1.

© UCLES 2023

GradeMax

Experiment B

The student repeats the process. She waits until the initial temperature θ_B of the water is the same value as the temperature θ_A at 90 s in **Experiment A**.
In the first line of Table 2.1, record her initial temperature θ_B for **Experiment B**. [1]

Her readings for the remainder of **Experiment B** are shown in Table 2.1.

Table 2.1

t/s	θ_A/°C	θ_B/°C
0	92.0	
30	89.5	83.5
60	87.0	81.5
90	85.0	79.5
120	83.5	78.0
150	82.0	76.5
180	80.0	75.0

(c) Write a conclusion stating how the temperature at t = 0 s affects the rate of cooling of the water.
Justify your answer by reference to values from the results.

.....

.....

.....

..... [2]

(d) **(i)** Calculate the average cooling rate x_1 during the second half of **Experiment A**.
Use the readings from Table 2.1 and the equation

$$x_1 = \frac{\theta_{A90} - \theta_{A180}}{T}$$

where T = 90 s and θ_{A90} and θ_{A180} are the temperatures at t = 90 s and t = 180 s in **Experiment A**.
Include the unit for the cooling rate.

x_1 = ... [1]

(ii) Calculate the average cooling rate x_2 during the first half of **Experiment B**.

Use the readings from Table 2.1 and the equation

$$x_2 = \frac{\theta_{B0} - \theta_{B90}}{T}$$

where T = 90 s and θ_{B0} and θ_{B90} are the temperatures at t = 0 s and t = 90 s in **Experiment B**.

x_2 = ... [1]

(iii) A student suggests that x_1 and x_2 should be the same.
State whether your results support this suggestion.
Justify your statement by reference to your results.

statement .....

justification .....

.....

.....
[2]

(e) State **two** variables which must be controlled so that the comparison of x_1 and x_2 is valid.

1 .....

.....

2 .....

.....
[2]

[Total: 11]

© UCLES 2023

GradeMax

BLANK PAGE

GradeMax

3 A student investigates the properties of a resistance wire.

He uses the circuit shown in Fig. 3.1.

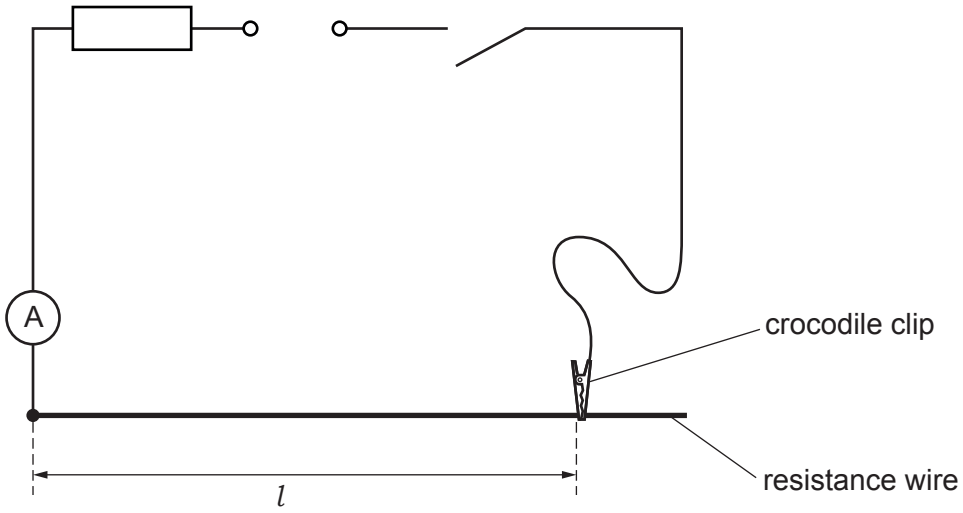

Fig. 3.1

(a) On Fig. 3.1, draw a voltmeter connected to measure the potential difference (p.d.) across length l of the resistance wire.

[1]

(b) **(i)** The student connects the crocodile clip to a length l = 20.0 cm of the resistance wire.
He measures the value of potential difference V and current I for the resistance wire.

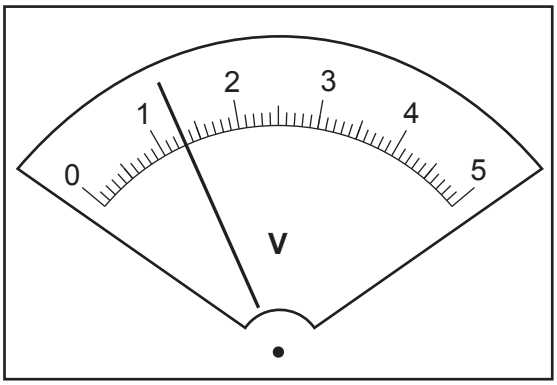

Fig. 3.2

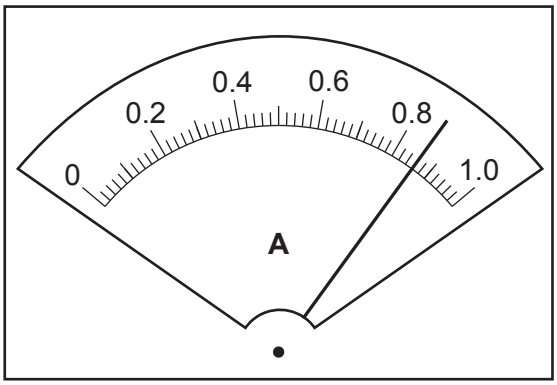

Fig. 3.3

Read, and record in the first line of Table 3.1, the values of V and I shown on the meters in Fig. 3.2 and Fig. 3.3.

The student repeats the process for lengths l = 40.0 cm, l = 60.0 cm, l = 80.0 cm and l = 100.0 cm of the resistance wire in turn.
His results are shown in Table 3.1.

© UCLES 2023

Table 3.1

l/cm	V/V	I/A	R/Ω
20.0			
40.0	1.7	0.47	3.6
60.0	2.2	0.52	4.2
80.0	2.3	0.35	6.6
100.0	2.4	0.29	8.3

[2]

(ii) For length $l = 20.0$ cm, calculate and record in Table 3.1 the resistance R of the resistance wire. Use your values of V and I from **(b)(i)** and the equation

$$R = \frac{V}{I}.$$

[1]

(c) Plot a graph of R/Ω (y-axis) against l/cm (x-axis).
Draw the straight line of best fit.

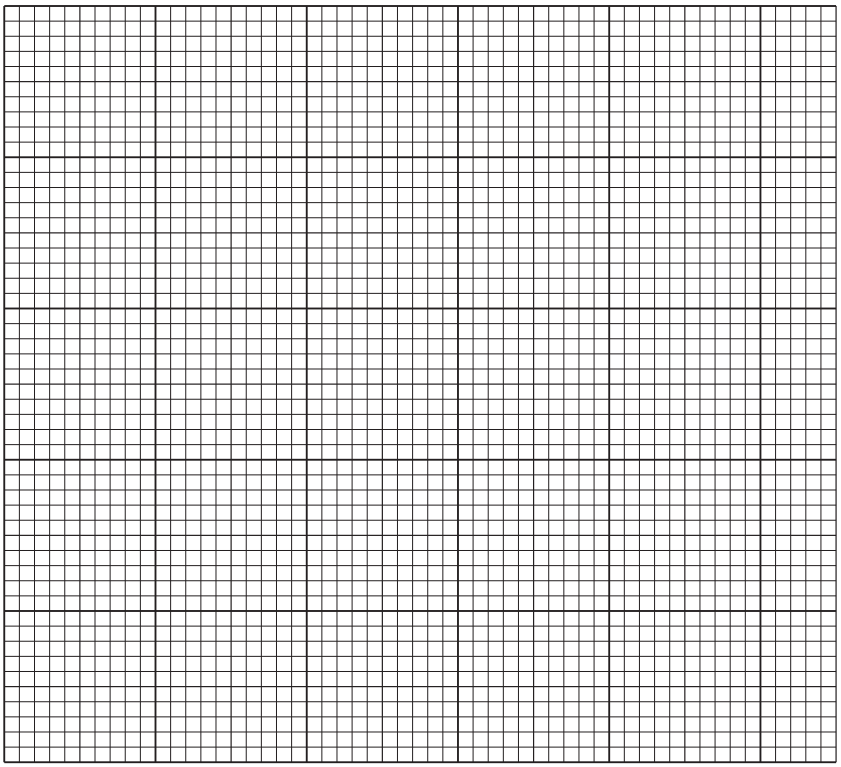

[4]

(d) (i) Determine the gradient G of the graph. Show clearly on the graph how you obtained the necessary information.

G = ... [1]

© UCLES 2023

GradeMax

(ii) The gradient G is numerically equal to the resistance per unit length R_0 of the resistance wire.
Write down a value of R_0 for this experiment.

R_0 = ... Ω / cm [1]

(e) Suggest **one** practical reason why students carrying out this experiment may not obtain the same readings as in Table 3.1. Assume that the procedure has been done carefully.

.....

.....

..... [1]

[Total: 11]

© UCLES 2023

GradeMax

BLANK PAGE

GradeMax

4 A student investigates the motion of a ball through the air.

Plan an experiment which will enable him to investigate how the range of the ball depends on the angle at which it is launched.

The range is the horizontal distance that the ball travels after leaving the end of the channel shown in Fig. 4.1 and before hitting the ground.

The apparatus available includes:

- a flexible channel, as shown in Fig. 4.1, which can be bent at different angles
- a selection of balls, each of different diameter and mass.

In your plan, you should:

- list any additional apparatus needed
- explain briefly how to do the experiment – you may add to Fig. 4.1 if it helps your explanation
- state the key variables to keep constant
- draw a table with column headings, to show how to display the readings (you are **not** required to enter any readings in the table)
- explain how to use the results to reach a conclusion.

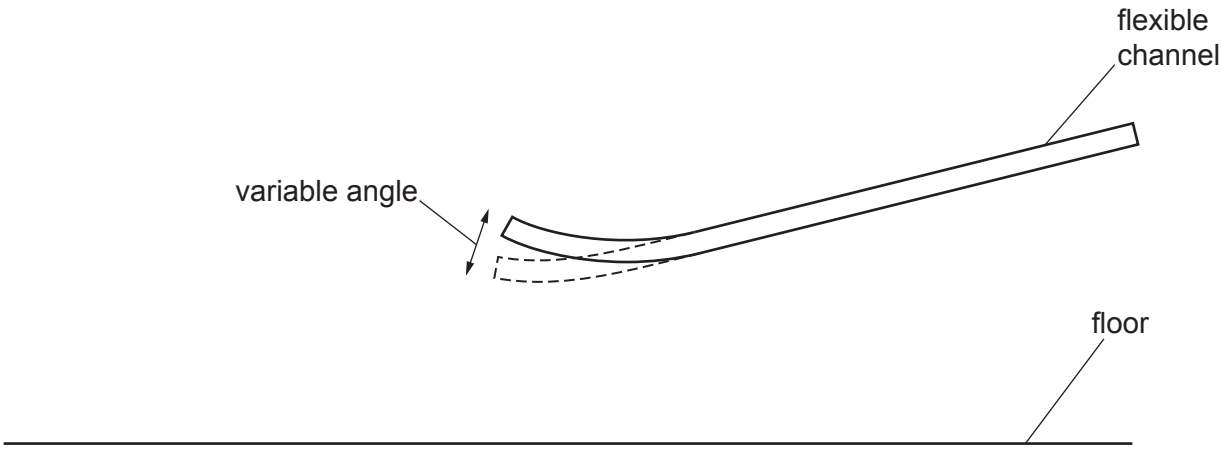

Fig. 4.1

© UCLES 2023

.....

.....

.....

.....

.....

.....

.....

.....

.....

.....

.....

.....

.....

.....

.....

.....

.....

.....

.....

..... [7]

© UCLES 2023

GradeMax

BLANK PAGE

Permission to reproduce items where third-party owned material protected by copyright is included has been sought and cleared where possible. Every reasonable effort has been made by the publisher (UCLES) to trace copyright holders, but if any items requiring clearance have unwittingly been included, the publisher will be pleased to make amends at the earliest possible opportunity.

To avoid the issue of disclosure of answer-related information to candidates, all copyright acknowledgements are reproduced online in the Cambridge Assessment International Education Copyright Acknowledgements Booklet. This is produced for each series of examinations and is freely available to download at www.cambridgeinternational.org after the live examination series.

Cambridge Assessment International Education is part of Cambridge Assessment. Cambridge Assessment is the brand name of the University of Cambridge Local Examinations Syndicate (UCLES), which is a department of the University of Cambridge.

© UCLES 2023