GradeMax

Cambridge Assessment International Education

Cambridge IGCSE™

PHYSICS **0625/12**

Paper 1 Multiple Choice (Core) **February/March 2024**

45 minutes

You must answer on the multiple choice answer sheet.

You will need: Multiple choice answer sheet
Soft clean eraser
Soft pencil (type B or HB is recommended)

INSTRUCTIONS

- There are **forty** questions on this paper. Answer **all** questions.
- For each question there are four possible answers **A**, **B**, **C** and **D**. Choose the **one** you consider correct and record your choice in soft pencil on the multiple choice answer sheet.
- Follow the instructions on the multiple choice answer sheet.
- Write in soft pencil.
- Write your name, centre number and candidate number on the multiple choice answer sheet in the spaces provided unless this has been done for you.
- Do **not** use correction fluid.
- Do **not** write on any bar codes.
- You may use a calculator.
- Take the weight of 1.0 kg to be 9.8 N (acceleration of free fall = 9.8 m / s^2).

INFORMATION

- The total mark for this paper is 40.
- Each correct answer will score one mark.
- Any rough working should be done on this question paper.

This document has **16** pages. Any blank pages are indicated.

© UCLES 2024

[Turn over

GradeMax

1 The diagram shows a pendulum that oscillates between P and Q.

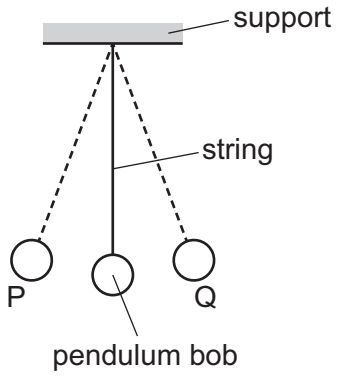

Which method is used to find the average period of oscillation for the pendulum?

A Measure the time it takes to swing from P to Q.

B Measure the time it takes to swing from P to Q to P 10 times and divide that time by 10.

C Measure the time it takes to swing from P to Q to P 10 times and multiply that time by 10.

D Measure the time it takes to swing from Q to P.

2 A car moves through a measured distance s in a known time t.

What is the correct equation used to calculate the average speed v of the car?

A $v = \frac{s}{t}$ **B** $v = s \times t$ **C** $v = \frac{t}{s}$ **D** $v = s \times t^2$

3 On Mars, the acceleration of free fall is $3.7\,\text{m/s}^2$.

What is the weight of a 2.0 kg mass on Mars?

A 0.54 N **B** 1.9 N **C** 7.4 N **D** 20 N

4 A rocket is travelling vertically upwards. Three vertical forces act on it.

The thrust acts upwards and is equal to 100 000 N.

The weight acts downwards and is equal to 80 000 N.

What is the air resistance force acting on the rocket when it is travelling upwards at a constant speed?

A 20 000 N downwards

B 20 000 N upwards

C 180 000 N downwards

D 180 000 N upwards

© UCLES 2024

GradeMax

5 An irregular plane object is suspended freely from point O.

The object is displaced and then released. It swings a few times, and comes to rest as shown.

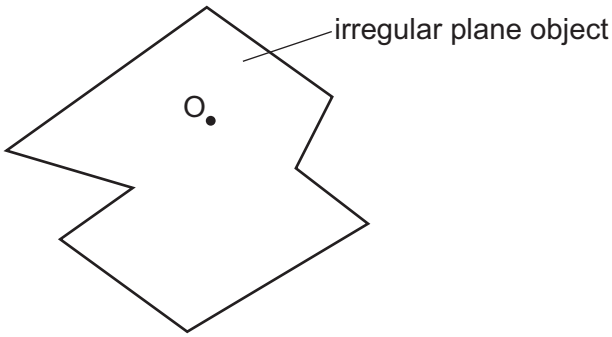

Where is the centre of gravity of the object?

A horizontally to the left of O

B horizontally to the right of O

C vertically above O

D vertically below O

6 Three situations are listed.

1 someone blowing air into a party balloon

2 a crane lifting a block of concrete

3 a pile of books at rest on a shelf

In which situations is work being done?

A 1, 2 and 3 **B** 1 and 2 only **C** 1 only **D** 2 and 3 only

7 Which row describes an advantage and a disadvantage of wind turbines?

	advantage	disadvantage
A	no fuel needed	harmful gases released
B	variable supply	fuel needed
C	no harmful gases released	variable supply
D	constant supply	noisy

© UCLES 2024

[Turn over

8 The diagram shows a rectangular metal block with dimensions 2.5 cm × 3.0 cm × 4.5 cm. The block is resting on the ground.

The block exerts a pressure of 0.23 N / cm^2 on the ground.

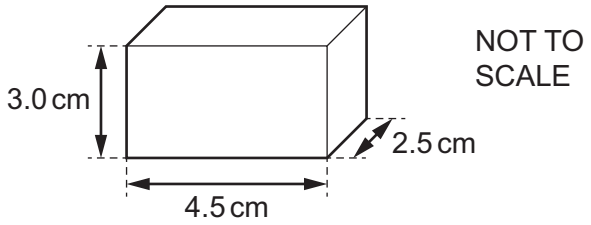

What is the weight of the metal block?

A 0.020 N **B** 1.7 N **C** 2.6 N **D** 3.1 N

9 Which row correctly describes the movement of particles in solids and liquids?

	solids	liquids
A	no movement	move around each other
B	no movement	vibration only
C	vibration only	move around each other
D	vibration only	vibration only

10 What is the boiling temperature of water at standard atmospheric pressure?

A –173 K **B** 100 K **C** 273 K **D** 373 K

11 Which row describes how the volume and mass of liquid mercury change as it is heated?

	volume	mass
A	decreases	decreases
B	decreases	stays the same
C	increases	increases
D	increases	stays the same

12 In which situation does the store of internal energy of the water increase?

A water at 0 °C freezing to form ice

B water being heated from 25 °C to 40 °C

C steam condensing on a window

D water in a puddle on a breezy day

© UCLES 2024

GradeMax

13 Which statement describes what happens to particles during the evaporation of a liquid?

A Particles become fixed in position.

B Particles escape from the surface.

C Particles move much closer together.

D Particles start to move around at random.

14 Which of the following is **not** an example of convection?

A a spoon handle becoming hot when it is placed in a hot drink

B a thermal up-draught in the atmosphere that glider pilots use

C flames and smoke rising from a fire

D warming up water in a kettle on a gas ring

© UCLES 2024

[Turn over

GradeMax

15 A hollow aluminium cube is filled with very hot water.

Side X of the cube is opposite side Y of the cube. One of these two sides is black and one is white.

A student holds the back of one hand 5 cm from side X, and then immediately holds the back of the other hand 5 cm from side Y.

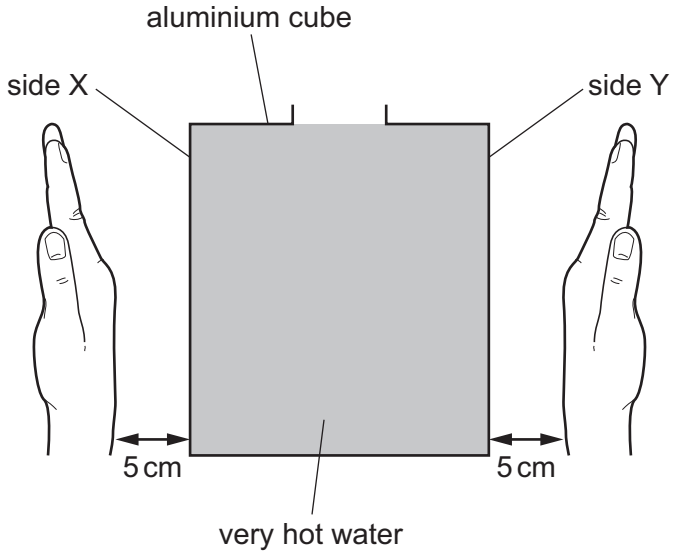

The hand held near side Y feels warmer than the hand held near side X.

Which row identifies the black side and correctly compares the rate of emission of thermal radiation from each side?

	black side	rate of emission of thermal radiation
A	X	greater for X
B	X	the same for X and Y
C	Y	greater for Y
D	Y	the same for X and Y

© UCLES 2024

GradeMax

16 The diagram shows a ray of light travelling from air into a glass block and changing direction so that it is closer to the normal.

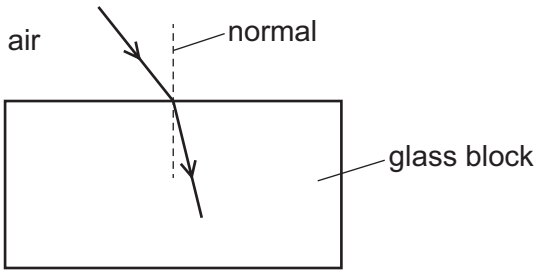

What is the name of this process and why does it happen?

	process	why it happens
A	diffraction	speed of the light decreases
B	diffraction	speed of the light increases
C	refraction	speed of the light increases
D	refraction	speed of the light decreases

17 Which row gives an example of a longitudinal wave and describes the direction of the vibrations?

	example of a longitudinal wave	direction of vibrations
A	light wave	at right angles to the direction of propagation
B	light wave	parallel to the direction of propagation
C	sound wave	at right angles to the direction of propagation
D	sound wave	parallel to the direction of propagation

18 Which statement about total internal reflection is correct?

A Total internal reflection occurs when light is incident on a glass to air boundary at an angle of incidence greater than the critical angle.

B Total internal reflection occurs when light is incident on a glass to air boundary at an angle of incidence less than the critical angle.

C Total internal reflection occurs when light is incident on an air to glass boundary at an angle of incidence greater than the critical angle.

D Total internal reflection occurs when light is incident on an air to glass boundary at an angle of incidence less than the critical angle.

© UCLES 2024

[Turn over

GradeMax

19 A ray of green light passes through a glass prism, as shown.

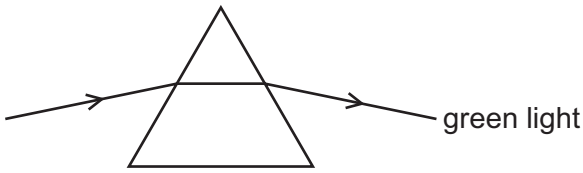

Which colours of light refract as shown in the table?

	refracts more than green	refracts less than green
A	red	blue
B	red	yellow
C	violet	blue
D	violet	yellow

20 Which electromagnetic waves are used for sterilising medical equipment?

A gamma rays

B microwaves

C radio waves

D visible light

21 Which process causes a sound wave to produce an echo?

A diffraction

B dispersion

C reflection

D refraction

22 A student stands 75 m from a wall and makes a short, loud sound by tapping two pieces of wood together.

What is the approximate time between making the sound and the student hearing the echo produced?

A 0.2 s **B** 0.5 s **C** 2 s **D** 5 s

© UCLES 2024

GradeMax

23 Which statement is **always** true?

A A magnetic material attracts a non-magnetic material.

B A magnetic material repels another magnetic material.

C A magnetic material attracts another magnetic material if one of them is magnetised.

D A non-magnetic material repels another non-magnetic material.

24 A polythene rod is charged by friction. The polythene rod becomes negatively charged.

Which statement is correct?

A The rod gains electrons.

B The rod loses electrons.

C The rod gains protons.

D The rod loses protons.

25 What is the unit of electromotive force (e.m.f.)?

A ampere

B newton

C ohm

D volt

© UCLES 2024

[Turn over

GradeMax

26 The diagram shows a circuit containing two identical lamps and three ammeters.

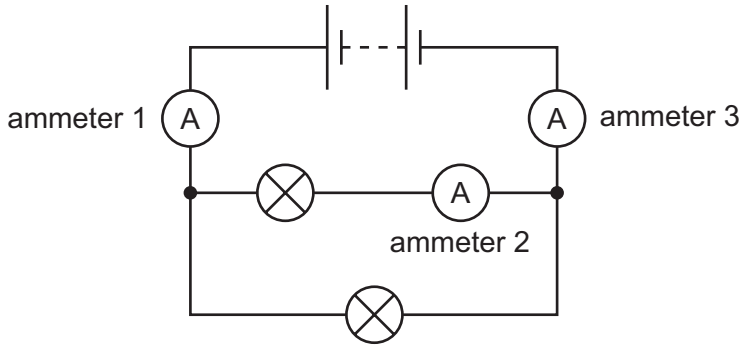

The current in ammeter 1 is 0.30 A.

Which row gives possible values for the currents in ammeters 2 and 3?

	current in ammeter 2 / A	current in ammeter 3 / A
A	0.15	0.00
B	0.15	0.30
C	0.30	0.00
D	0.30	0.30

27 Into which wire is a switch connected in order to switch a mains appliance on and off safely?

A live

B negative

C neutral

D positive

28 Which device uses the magnetic effect of an electric current?

A heater

B lamp

C relay

D thermistor

29 A transformer has 200 turns on its primary coil and is connected to a 240 V a.c. supply.

The output voltage of the transformer is 60 V a.c.

How many turns are on the secondary coil of the transformer?

A 20 **B** 50 **C** 72 **D** 800

© UCLES 2024

GradeMax

30 Which statement about an atom is correct?

A An atom has positive charge because there are only positive charges in the nucleus.

B An atom has negative charge because there are only negative charges in the nucleus.

C An atom has neutral charge because the positive charge in the nucleus equals the total negative charge of the electrons.

D An atom has neutral charge because the negative charge in the nucleus equals the total positive charge of the electrons.

31 The table gives information about four nuclei.

nucleus	proton number	nucleon number
1	26	59
2	27	59
3	27	60
4	28	60

Which nuclei are isotopes of the same element?

A 1 and 2 **B** 1 and 4 **C** 2 and 3 **D** 3 and 4

32 Which apparatus is used to measure background radiation?

A a counter, a detector and a source

B a counter and a detector only

C a counter and a source only

D a detector and a source only

33 Which row correctly identifies the nature of each radioactive emission?

	alpha (α)	beta (β)	gamma (γ)
A	helium nucleus	electromagnetic wave	electron
B	electron	helium nucleus	electromagnetic wave
C	helium nucleus	electron	electromagnetic wave
D	electromagnetic wave	electron	helium nucleus

© UCLES 2024

[Turn over

34 A nucleus spontaneously emits radiation and becomes a nucleus of a different element.

What could the emitted radiation be?

A alpha or beta

B alpha or gamma

C beta or neutron

D gamma or neutron

35 The diagram shows a lead-lined box used for storing a radioactive source.

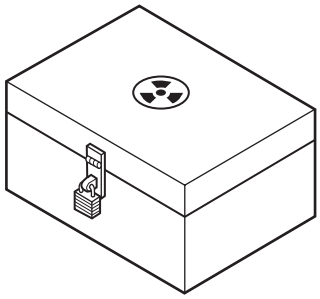

Why is the inside of the box lined with lead?

A It helps the source to stay radioactive for longer.

B It makes the box heavier.

C It makes the radioactive source more stable.

D It reduces the amount of radiation that can escape from the box.

36 A student draws a simplified diagram showing the Sun and the different movements of the Moon and the Earth.

Which arrow represents a motion taking 365 days to complete?

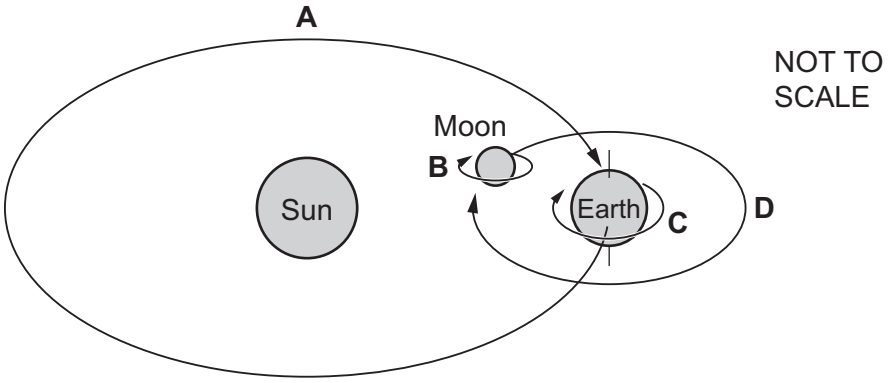

GradeMax

37 The table gives information about four of the planets in our Solar System.

Two of these planets are gaseous and two are rocky.

planet	average distance from the Sun / km
1	1.4×10^9
2	2.3×10^8
3	5.8×10^7
4	7.8×10^8

Which two planets are rocky?

A 1 and 2 **B** 1 and 4 **C** 2 and 3 **D** 3 and 4

38 Which row shows the most common elements in the Sun and the regions of the electromagnetic spectrum in which most of the Sun's energy is radiated?

	elements	regions
A	carbon and oxygen	gamma and radio waves
B	carbon and oxygen	infrared and visible
C	hydrogen and helium	gamma and radio waves
D	hydrogen and helium	infrared and visible

39 What is the meaning of a light-year?

A the distance light travels in space in one year

B the number of years it takes light to travel from the Sun to the Earth

C the speed that light travels in space

D the time it takes light to travel from the Sun to the nearest star

40 What is the approximate diameter of the Milky Way?

A 100 light-years

B 1000 light-years

C 10 000 light-years

D 100 000 light-years

© UCLES 2024

GradeMax

BLANK PAGE

© UCLES 2024

GradeMax

BLANK PAGE

© UCLES 2024

GradeMax

BLANK PAGE

Permission to reproduce items where third-party owned material protected by copyright is included has been sought and cleared where possible. Every reasonable effort has been made by the publisher (UCLES) to trace copyright holders, but if any items requiring clearance have unwittingly been included, the publisher will be pleased to make amends at the earliest possible opportunity.

To avoid the issue of disclosure of answer-related information to candidates, all copyright acknowledgements are reproduced online in the Cambridge Assessment International Education Copyright Acknowledgements Booklet. This is produced for each series of examinations and is freely available to download at www.cambridgeinternational.org after the live examination series.

Cambridge Assessment International Education is part of Cambridge Assessment. Cambridge Assessment is the brand name of the University of Cambridge Local Examinations Syndicate (UCLES), which is a department of the University of Cambridge.

© UCLES 2024