GradeMax

Cambridge Assessment International Education

Cambridge IGCSE™

CANDIDATE NAME									
CENTRE NUMBER						CANDIDATE NUMBER				

2521575846

PHYSICS **0625/32**

Paper 3 Theory (Core) **February/March 2024**

1 hour 15 minutes

You must answer on the question paper.

No additional materials are needed.

INSTRUCTIONS

- Answer **all** questions.
- Use a black or dark blue pen. You may use an HB pencil for any diagrams or graphs.
- Write your name, centre number and candidate number in the boxes at the top of the page.
- Write your answer to each question in the space provided.
- Do **not** use an erasable pen or correction fluid.
- Do **not** write on any bar codes.
- You may use a calculator.
- You should show all your working and use appropriate units.
- Take the weight of 1.0 kg to be 9.8 N (acceleration of free fall = 9.8 m / s^2).

INFORMATION

- The total mark for this paper is 80.
- The number of marks for each question or part question is shown in brackets [ ].

This document has **16** pages. Any blank pages are indicated.

© UCLES 2024

1 Fig. 1.1 shows the distance–time graph for a student. The student walks out of a classroom, stops to talk to some friends, and then walks to their next class.

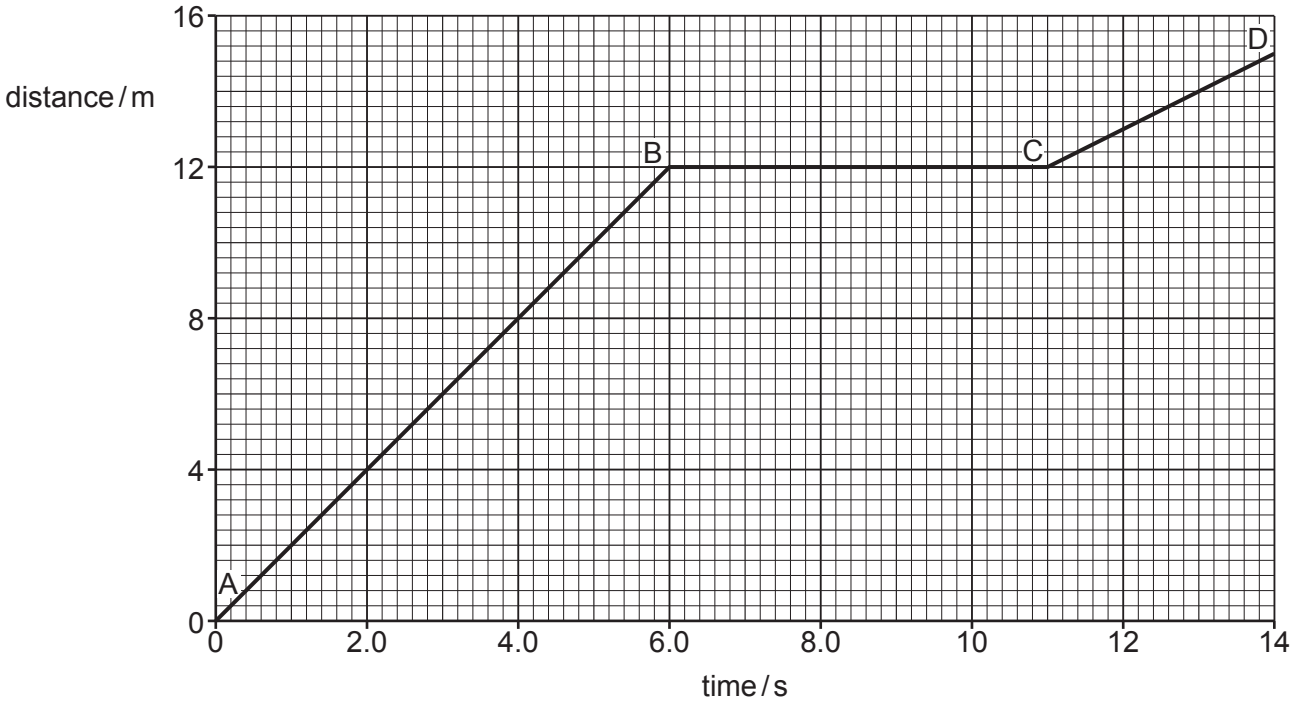

Fig. 1.1

(a) Describe the motion of the student between time = 0 and time = 6.0 s.

..... [1]

(b) Calculate the speed of the student between time = 0 and time = 6.0 s.

speed = ... m / s [3]

(c) Determine the length of time for which the student stops walking.

time = ... s [1]

(d) Compare the student's speed in section AB with the speed in section CD.

..... [1]

[Total: 6]

© UCLES 2024

2 **(a)** A student determines the volume of a piece of metal. The student pours 30 cm^3 of water into a measuring cylinder. The piece of metal is submerged in the water and the new volume reading on the measuring cylinder is 42 cm^3.

Calculate the volume of the piece of metal.

volume = ... cm^3 [1]

(b) The mass of another piece of metal is 320 g. The volume of the piece of metal is 40 cm^3.
Calculate the density of the metal. Give the correct unit.

density = ...

unit .....
[4]

(c) The student drops the piece of metal into a tank of water. Two vertical forces act on the piece of metal as it falls through the water in the tank.
On Fig. 2.1, each arrow represents a vertical force.

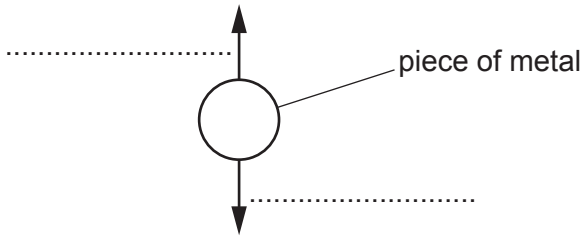

Fig. 2.1

(i) Complete the diagram in Fig. 2.1 by labelling the two forces.
[2]

(ii) The upward force is the same size as the downward force.

Describe the motion of the piece of metal as it falls through the water.

..... [1]

[Total: 8]

© UCLES 2024

3 Fig. 3.1 shows a computer on the surface of a desk.

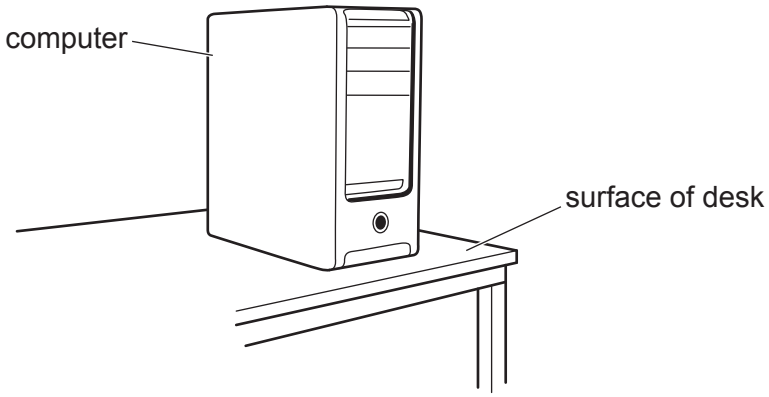

Fig. 3.1

(a) The weight of the computer is 48 N.
The area of the computer in contact with the surface of the desk is 20 cm^2.

Calculate the pressure due to the computer on the surface of the desk.

pressure = ... N / cm^2 [3]

(b) A student uses a force of 12 N to tilt the computer as shown in Fig. 3.2.

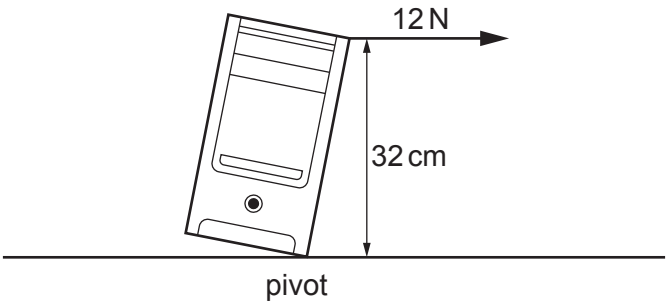

Fig. 3.2

Calculate the moment of the 12 N force about the pivot.

moment = ... N cm [3]

[Total: 6]

© UCLES 2024

4 Fig. 4.1 shows a student using a battery-powered device.

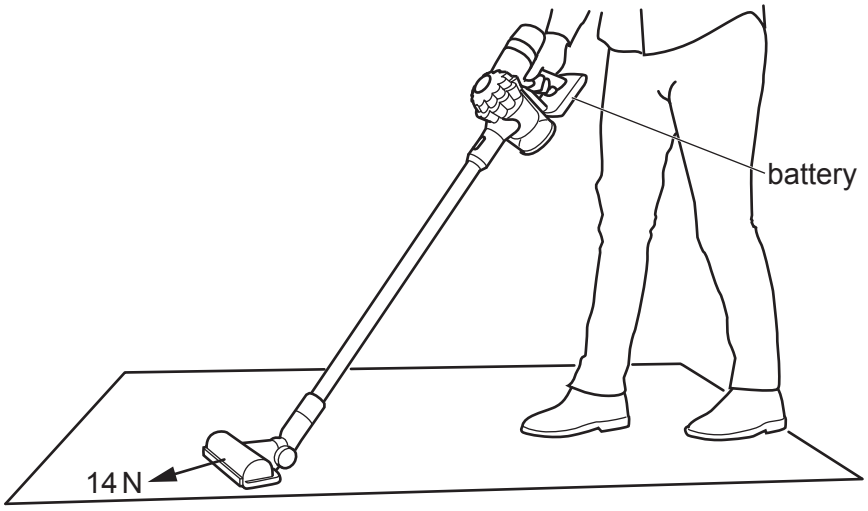

Fig. 4.1

(a) State the energy store in the battery.

..... [1]

(b) The student pushes the device along the floor at a constant speed with a horizontal force of 14 N. The student pushes the device for a distance of 4.5 m.

Calculate the mechanical work done by the force pushing the device.

work done = ... J [3]

(c) The student uses the device for a time of 30 s. The energy input to the device is 5400 J.

Calculate the power input to the device.

power input = ... W [3]

[Total: 7]

GradeMax

5 Fig. 5.1 shows a metal container used for storing petrol.
There is some petrol gas above the liquid petrol inside the metal container.

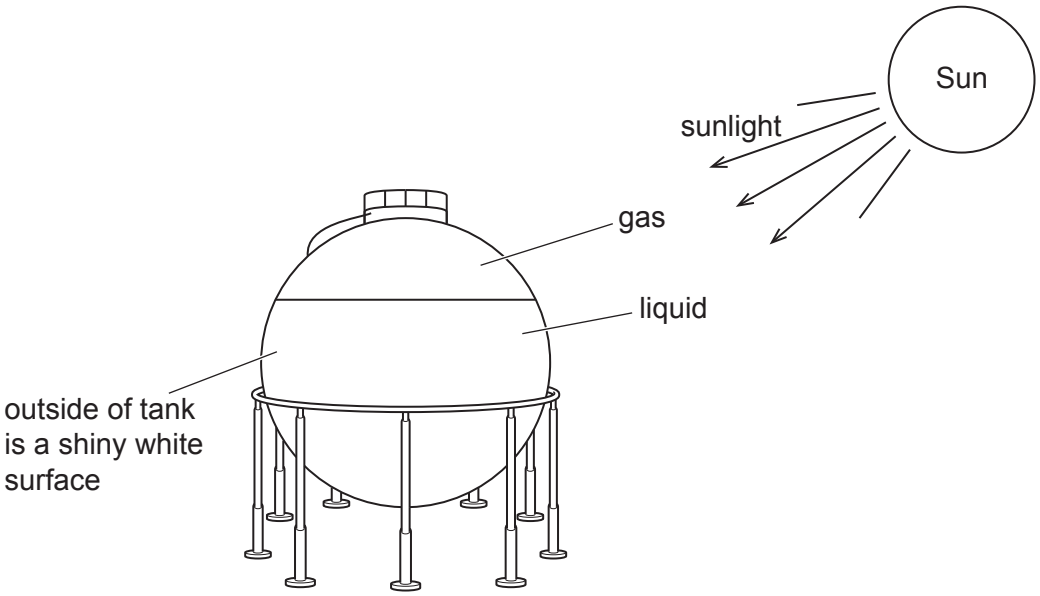

Fig. 5.1 (not to scale)

(a) Describe the arrangement and motion of the particles in the **liquid** petrol stored in the container.
Use your ideas from the kinetic particle model of matter.

.....

.....

.....

..... [2]

(b) The temperature of the petrol **gas** inside the metal container increases.

State and explain any change in the pressure of the petrol gas on the metal container.

.....

.....

.....

..... [3]

(c) Describe how thermal energy travels from the Sun to the petrol inside the metal container.

.....

..... [2]

[Total: 7]

© UCLES 2024

GradeMax

6 Fig. 6.1 represents a transverse wave.

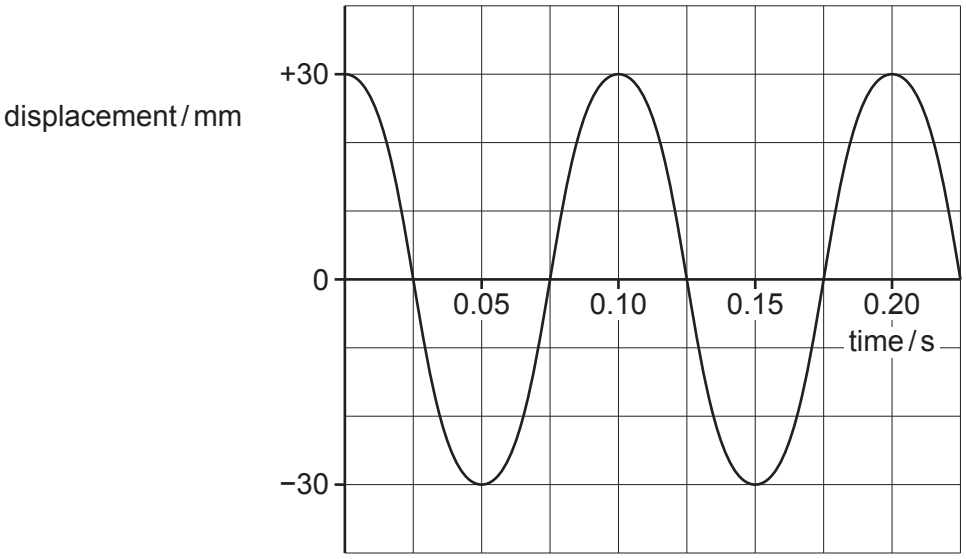

Fig. 6.1

(a) (i) Determine the amplitude of the wave in Fig. 6.1.

amplitude = ... mm [1]

(ii) Determine the frequency of the wave in Fig. 6.1.

frequency = ... Hz [2]

(b) (i) State the name of **one** type of transverse wave.

..... [1]

(ii) Describe the vibrations in a transverse wave.

.....

..... [2]

[Total: 6]

© UCLES 2024

[Turn over

7 Fig. 7.1 represents an object placed close to a thin converging lens. The scale for the grid is shown.

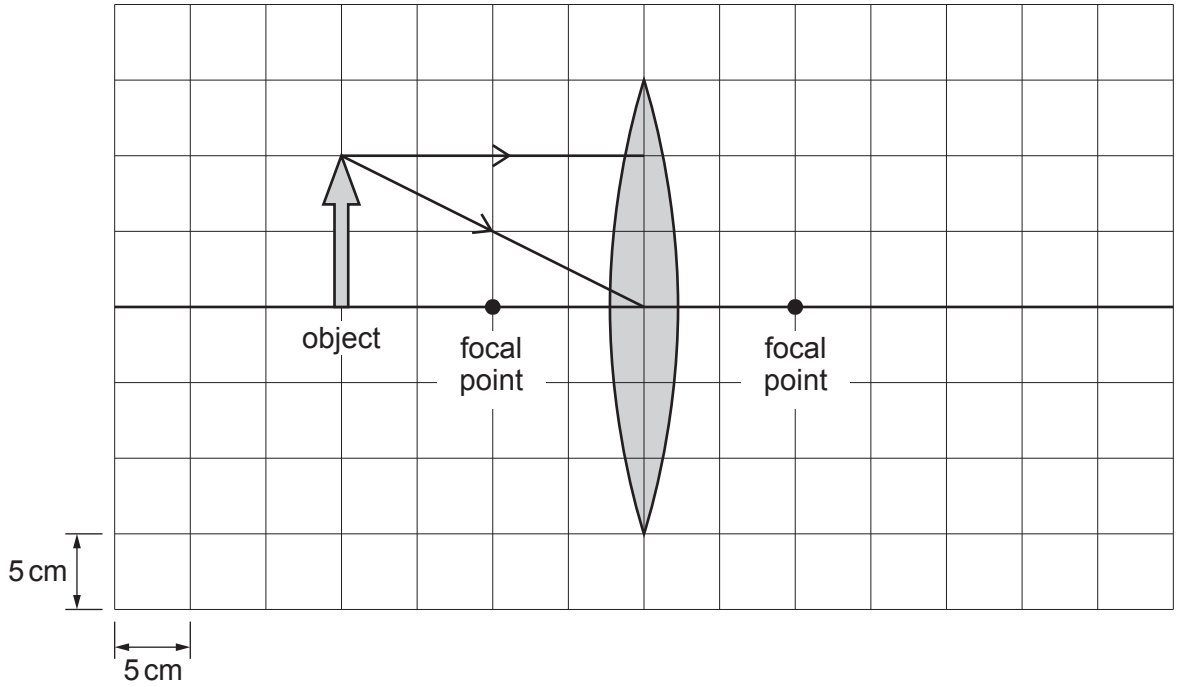

Fig. 7.1

(a) (i) Determine the focal length of the converging lens. Use the information in Fig. 7.1.

focal length = ... cm [2]

(ii) On Fig. 7.1, determine the position of the image formed by the lens, by continuing the path of each ray beyond the lens. Use an arrow to indicate the position of the image. [3]

(b) Fig. 7.2 shows the regions of the electromagnetic spectrum.

radio waves	microwaves	infrared light	visible light	ultraviolet light	.....	gamma rays

Fig. 7.2

(i) In Fig. 7.2, one region is unlabelled.
State the name of the unlabelled region.

..... [1]

(ii) Describe **one** use of ultraviolet light.

..... [1]

(iii) Describe **one** harmful effect on people due to excessive exposure to ultraviolet light.

..... [1]

[Total: 8]

© UCLES 2024

8 **(a)** Fig. 8.1 shows a permanent bar magnet.



Fig. 8.1

Describe an experiment to identify the **pattern** and **directions** of the magnetic field lines around the bar magnet.
You may draw on Fig. 8.1 as part of your answer.

.....

.....

.....

.....

.....

..... [4]

(b) State the name of a material that is suitable for a permanent magnet.

..... [1]

(c) State **one** use of a permanent magnet.

..... [1]

[Total: 6]

GradeMax

9 A student connects the electrical circuit shown in Fig. 9.1.

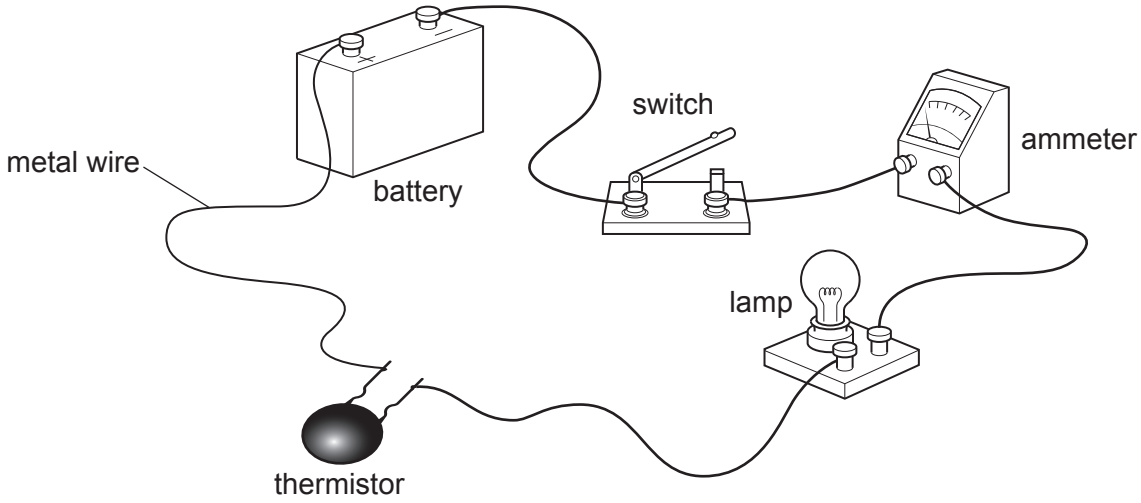

Fig. 9.1

(a) Fig. 9.2 shows part of the circuit diagram for the circuit in Fig. 9.1.

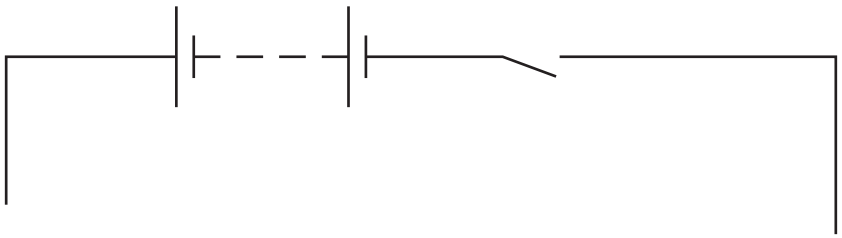

Fig. 9.2

Complete the circuit diagram in Fig. 9.2 to represent the circuit in Fig. 9.1. Use standard electrical symbols.

[4]

© UCLES 2024

(b) The potential difference across the lamp is 5.4 V and the current in the lamp is 0.20 A.

(i) Calculate the resistance of the lamp.

resistance = ... Ω [3]

(ii) The lamp is switched on for 30 s. Calculate the energy transferred in the lamp during this time.

energy transferred = ... J [3]

(c) The student increases the temperature of the thermistor.

State and explain what happens to the current in the circuit.

.....

..... [2]

[Total: 12]

10 **(a)** Fig. 10.1 represents an atom of carbon.

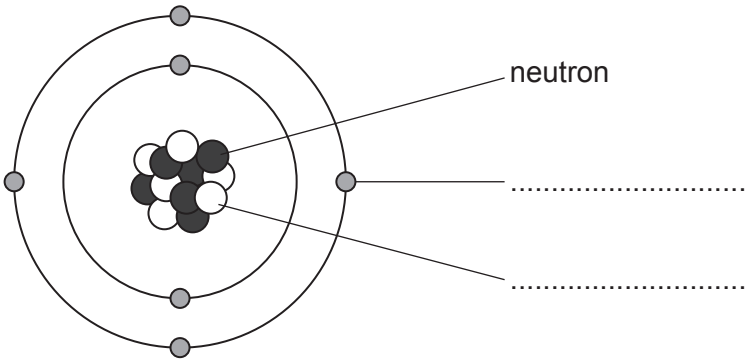

Fig. 10.1 (not to scale)

Complete the labels for the particles in Fig. 10.1.
On each dotted line, write the name of the particle.

[2]

(b) An atom of lithium has the nuclide notation:

$$^{7}_{3}\mathrm{Li}$$

Draw a clearly labelled diagram to represent one atom of lithium.

[3]

(c) An isotope of carbon has a half-life of 5700 years. A sample contains 120 mg of this isotope.

Calculate the time taken for this isotope of carbon to decay from 120 mg to 15 mg.

time taken = ... years [2]

[Total: 7]

11 Fig. 11.1 represents the four planets nearest to the Sun.

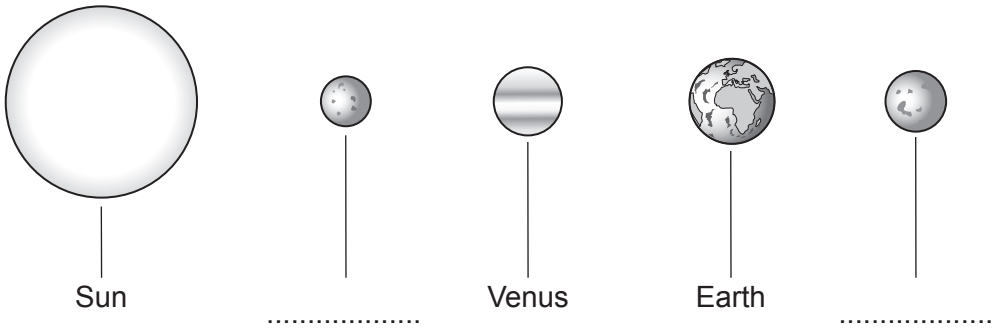

Fig. 11.1 (not to scale)

(a) Two of the planets in Fig. 11.1 are not labelled. On each dotted line, write the name of the planet.

[2]

(b) The distance of Venus from the Sun is 1.1×10^{11} m. The speed of light is 3.0×10^{8} m/s.

Calculate the time it takes light to travel from the Sun to Venus.

time taken = ... s [3]

(c) The mass of the Earth is greater than the mass of Venus.

The gravitational field strength on the surface of the Earth is 9.8 N/kg.

Suggest a value for the gravitational field strength on the surface of Venus.

Give a reason for your answer.

gravitational field strength on surface of Venus = ... N/kg

reason .....

[2]

[Total: 7]

© UCLES 2024

GradeMax

BLANK PAGE

© UCLES 2024

GradeMax

BLANK PAGE

© UCLES 2024

GradeMax

BLANK PAGE

Permission to reproduce items where third-party owned material protected by copyright is included has been sought and cleared where possible. Every reasonable effort has been made by the publisher (UCLES) to trace copyright holders, but if any items requiring clearance have unwittingly been included, the publisher will be pleased to make amends at the earliest possible opportunity.

To avoid the issue of disclosure of answer-related information to candidates, all copyright acknowledgements are reproduced online in the Cambridge Assessment International Education Copyright Acknowledgements Booklet. This is produced for each series of examinations and is freely available to download at www.cambridgeinternational.org after the live examination series.

Cambridge Assessment International Education is part of Cambridge Assessment. Cambridge Assessment is the brand name of the University of Cambridge Local Examinations Syndicate (UCLES), which is a department of the University of Cambridge.

© UCLES 2024