GradeMax

Cambridge Assessment International Education

Cambridge IGCSE™

CANDIDATE NAME									
CENTRE NUMBER						CANDIDATE NUMBER				

2457811612

PHYSICS **0625/42**

Paper 4 Theory (Extended) **February/March 2024**

1 hour 15 minutes

You must answer on the question paper.

No additional materials are needed.

INSTRUCTIONS

- Answer **all** questions.
- Use a black or dark blue pen. You may use an HB pencil for any diagrams or graphs.
- Write your name, centre number and candidate number in the boxes at the top of the page.
- Write your answer to each question in the space provided.
- Do **not** use an erasable pen or correction fluid.
- Do **not** write on any bar codes.
- You may use a calculator.
- You should show all your working and use appropriate units.
- Take the weight of 1.0 kg to be 9.8 N (acceleration of free fall = 9.8 m / s^2).

INFORMATION

- The total mark for this paper is 80.
- The number of marks for each question or part question is shown in brackets [ ].

This document has **20** pages. Any blank pages are indicated.

DC (PB/SG) 331682/3
© UCLES 2024

[Turn over

1 **(a)** Fig. 1.1. is a speed–time graph for the first 5 minutes of a bus journey.

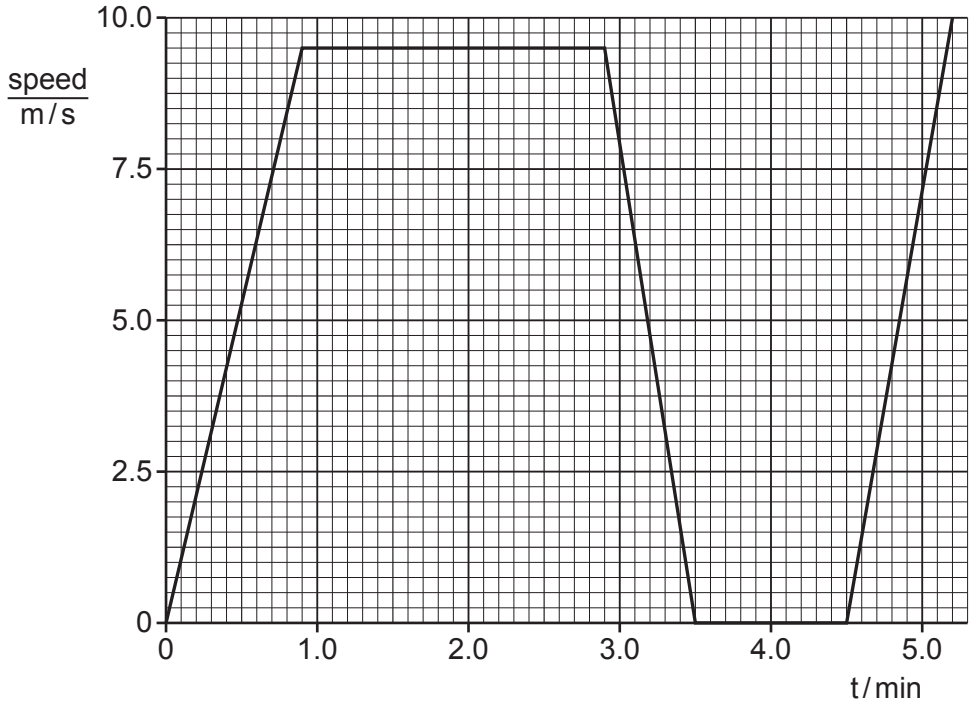

Fig. 1.1

Describe the motion between:

1. t = 0.90 min and t = 2.9 min .....

2. t = 2.9 min and t = 3.5 min .....

3. t = 3.5 min and t = 4.5 min .....

[3]

© UCLES 2024

GradeMax

(b) Another bus travels at a speed of 8.9 m / s. The brakes apply a constant force and the bus stops in a distance of 23 m. This bus has a mass of 18 000 kg.

(i) Calculate the kinetic energy of the bus before the brakes are applied.

kinetic energy = ... [2]

(ii) Calculate the force applied to stop the bus.

force = ... [3]

[Total: 8]

© UCLES 2024

[Turn over

2 **(a)** Define impulse.

.....

..... [1]

(b) Fig. 2.1 shows a rocket and its exhaust gases.

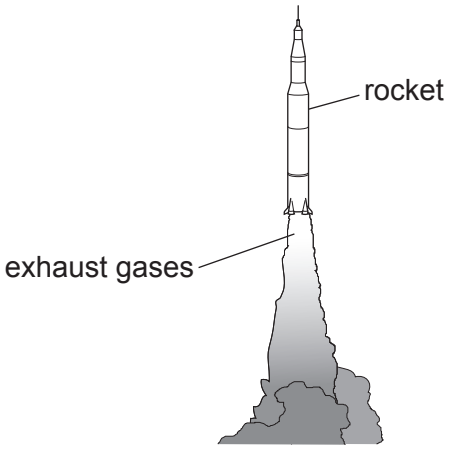

Fig. 2.1

The exhaust gases are emitted from the rocket with a velocity of 1400 m / s and at a rate of 2800 kg / s.

(i) Show that the force exerted on the rocket by the exhaust gases is 3900 kN.

State the equation you use.

[2]

(ii) Calculate the maximum mass that this force can lift from the ground. Ignore air resistance.

maximum mass = ... [3]

[Total: 6]

© UCLES 2024

3 **(a)** A car has a weight of 13000 N. The car is supported by 4 tyres. The area of each tyre in contact with the road is 0.016 m^2.

(i) Calculate the pressure on the road due to the weight of the car.

pressure = ... [2]

(ii) Explain, in terms of particles, why the air pressure in the tyres increases when the car travels along the road.

.....

.....

.....

.....

..... [4]

(b) A gas cylinder contains helium gas at a pressure of 2.0×10^6 Pa. A volume of 0.026 m^3 of the compressed gas is released from the cylinder into balloons. Each balloon contains 0.015 m^3 of helium at atmospheric pressure (1.0×10^5 Pa). The temperature remains constant.

Calculate the maximum number of balloons that can be filled.

maximum number of balloons = ... [3]

[Total: 9]

© UCLES 2024

GradeMax

4 **(a)** Define specific heat capacity.

.....

.....

..... [2]

(b) A volume of 0.0024 m^3 of oil is heated in a pan for 7.0 min. The temperature of the oil increases from 20 °C to 180 °C.

The density of the oil is 910 kg / m^3. The specific heat capacity of the oil is 2000 J / (kg °C).

(i) Calculate the mass of oil in the pan.

mass = ... [2]

(ii) Calculate the energy required to increase the temperature of the oil.

energy = ... [2]

(iii) Calculate the power required to supply the energy calculated in **(b)(ii)**.

power = ... [2]

[Total: 8]

© UCLES 2024

GradeMax

BLANK PAGE

GradeMax

5 **(a)** **(i)** Table 5.1 shows applications of regions of the electromagnetic spectrum.

Complete the second column of the table with the region of the electromagnetic spectrum used for each application.

Choose from the regions in this list:

gamma rays **infrared** **microwaves** **radio waves** **ultraviolet**

Each region may be used once, more than once or not at all.

Table 5.1

application	region of electromagnetic spectrum
cancer treatment	gamma rays
Bluetooth data connection	
optical fibres	
security marking	
sterilising food	
wireless internet	

[3]

(ii) State the approximate speed of radio waves in air.

speed = ... m/s [1]

(b) Fig. 5.1 shows successive crests of a wave after a plane wave has passed through a gap.

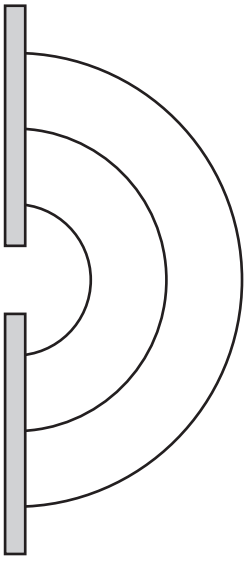

Fig. 5.1

(i) On Fig. 5.1 draw **three** successive crests before the wave reaches the gap. [2]

© UCLES 2024

(ii) Fig. 5.2 shows a much wider gap. A plane wave of the same wavelength as in **(b)(i)** is incident on the gap from the left side of the barrier.



Fig. 5.2

On Fig. 5.2, draw **three** successive crests of the wave after the wave has passed through the gap. [2]

[Total: 8]

© UCLES 2024

GradeMax

6 Fig. 6.1 shows a full-scale diagram of an object O and its image I produced by a converging lens. The lens and its position on the principal axis are not shown.



Fig. 6.1

(a) On Fig. 6.1, draw:

- a single ray to locate the position of the centre of the converging lens
- a line to represent the position of the lens and label the line L.

[2]

(b) Determine the focal length of the lens by drawing another ray on Fig. 6.1.

focal length = ... [2]

(c) The object is moved 2.0 cm closer to the lens.

State **two** changes to the characteristics of the image.

1 .....

2 .....

[2]

[Total: 6]

© UCLES 2024

7 **(a)** Draw the circuit symbol for a potential divider.

[1]

(b) Fig. 7.1 shows a circuit.

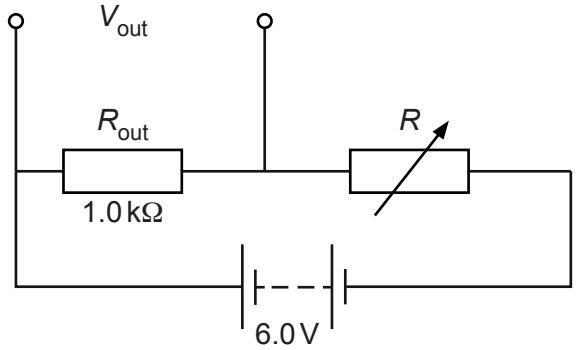

Fig. 7.1

(i) Calculate the value of V_{out} when the value of R is 3.0 kΩ.

V_{out} = ... [2]

(ii) The value of R is adjusted until the current in the circuit is 1.7 mA.

Calculate the charge that flows through the circuit in 300 s.

charge = ... [2]

[Total: 5]

GradeMax

8 **(a)** Fig. 8.1 shows a wire carrying a large current.

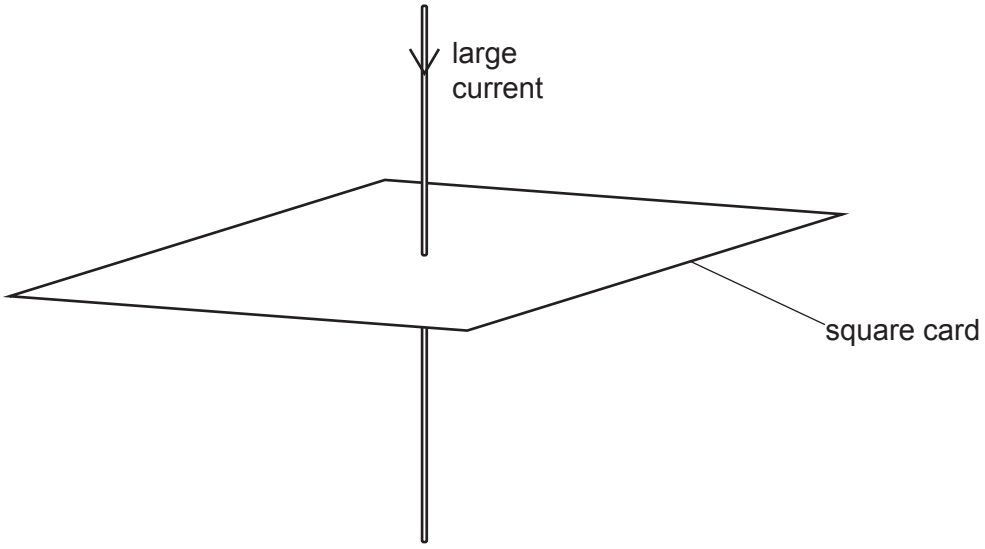

Fig. 8.1

(i) Fig. 8.2 shows the square card viewed from above.

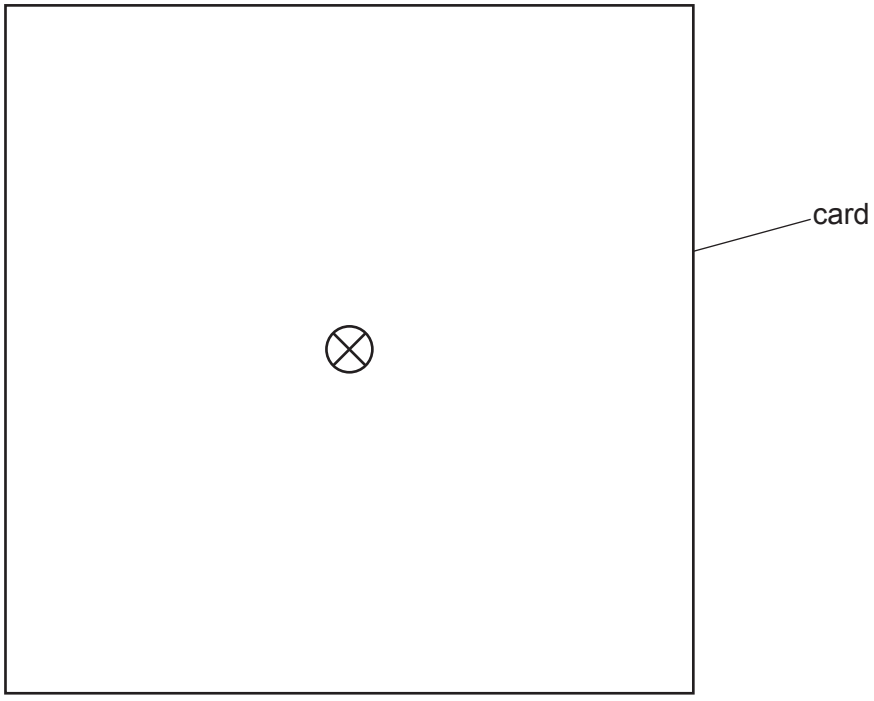

Fig. 8.2

On Fig. 8.2, draw **three** magnetic field lines that indicate the direction of the magnetic field and how its strength varies with distance from the wire. [3]

(ii) The current in the wire increases and the direction of the current is reversed.

State how these changes affect the magnetic field.

.....

..... [2]

© UCLES 2024

(b) Electricity is transmitted at high voltage.

Explain why a high voltage increases the efficiency of transmission even with thinner wires.

.....

.....

.....

..... [3]

[Total: 8]

9 **(a)** An experiment directs alpha particles at a very thin sheet of gold foil.

(i) Most of the alpha particles pass through the thin foil in a straight line.

State the conclusion about atoms from this observation.

.....

..... [1]

(ii) Some of the alpha particles are deflected through angles less than 90° and a few are deflected through 180°.

State and explain **two** conclusions about the nuclei of atoms from this observation.

conclusion 1 .....

explanation 1 .....

.....

conclusion 2 .....

explanation 2 .....

.....

[4]

(b) A source contains a radioactive isotope of strontium. This isotope decays by emission of β-particles. The half-life of this isotope is 29 years.

(i) State the change in the nucleus which occurs when a β-particle is emitted.

..... [1]

(ii) The initial mass of this isotope of strontium in the source is 25 μg.

Calculate the mass of the strontium isotope that decays in 87 years.

mass = ... μg [3]

[Total: 9]

© UCLES 2024

GradeMax

BLANK PAGE

10 **(a)** Fig. 10.1 represents different positions A–H of the Moon as it rotates around the Earth.

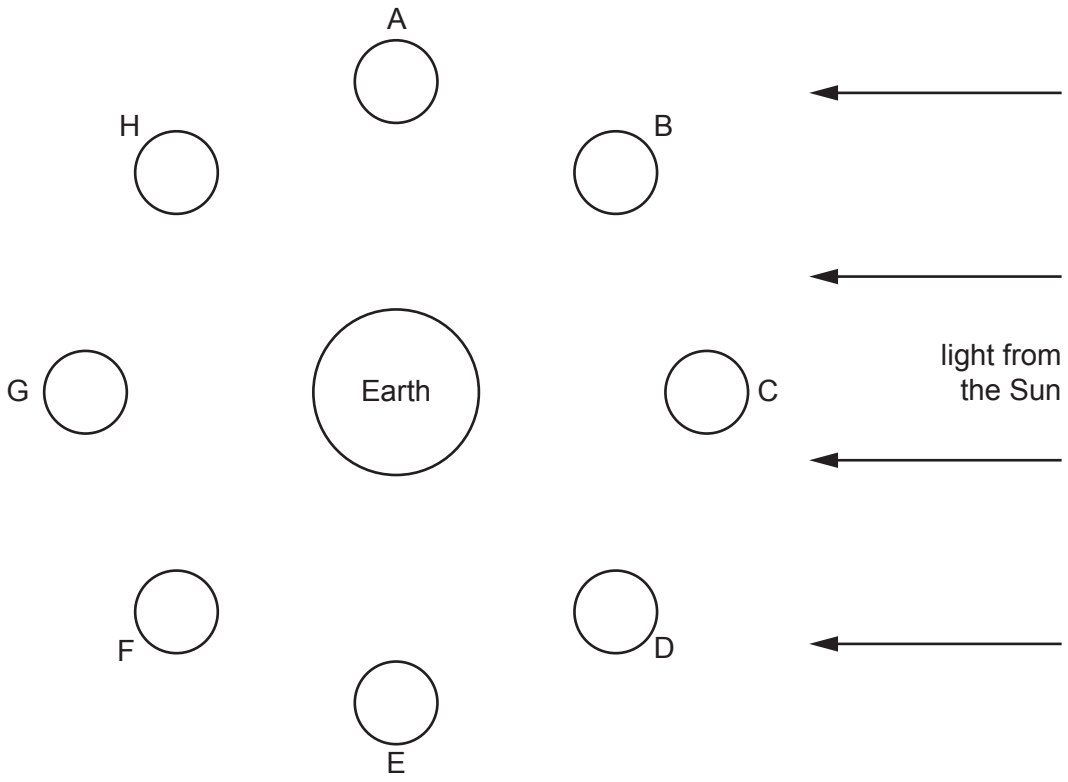

Fig. 10.1

(i) State a position of the Moon where an observer on Earth sees:

1. there is a quarter Moon  .....

2. there is a full Moon  .....

[2]

(ii) State the approximate time taken for the Moon to orbit the Earth.

time = ... [1]

© UCLES 2024

(b) The average distance of the Earth from the Sun is 1.5×10^8 km.

(i) Calculate the average orbital speed of the Earth in km / h.

average orbital speed = ... km / h [3]

(ii) The speed of light in a vacuum is 3.0×10^8 m / s. Calculate the time taken for light from the Sun to reach the Earth.

time = ... [2]

[Total: 8]

© UCLES 2024

11 **(a)** State the condition required for a protostar to become a stable star.

.....

.....

..... [1]

(b) **(i)** Define the Hubble constant.

.....

.....

..... [2]

(ii) The current estimate for the Hubble constant is 2.2×10^{-18} per second.

State the equation which gives an estimate for the age of the Universe.

..... [1]

(iii) Calculate an estimate for the age of the Universe.

estimate of age = ... s [1]

[Total: 5]

© UCLES 2024

GradeMax

BLANK PAGE

© UCLES 2024

GradeMax

BLANK PAGE

Permission to reproduce items where third-party owned material protected by copyright is included has been sought and cleared where possible. Every reasonable effort has been made by the publisher (UCLES) to trace copyright holders, but if any items requiring clearance have unwittingly been included, the publisher will be pleased to make amends at the earliest possible opportunity.

To avoid the issue of disclosure of answer-related information to candidates, all copyright acknowledgements are reproduced online in the Cambridge Assessment International Education Copyright Acknowledgements Booklet. This is produced for each series of examinations and is freely available to download at www.cambridgeinternational.org after the live examination series.

Cambridge Assessment International Education is part of Cambridge Assessment. Cambridge Assessment is the brand name of the University of Cambridge Local Examinations Syndicate (UCLES), which is a department of the University of Cambridge.

© UCLES 2024