GradeMax

Cambridge Assessment International Education

Cambridge IGCSE™

CANDIDATE NAME									
CENTRE NUMBER						CANDIDATE NUMBER				

T903696778

PHYSICS **0625/52**

Paper 5 Practical Test **February/March 2024**

1 hour 15 minutes

You must answer on the question paper.

You will need: The materials and apparatus listed in the confidential instructions

INSTRUCTIONS

- Answer **all** questions.
- Use a black or dark blue pen. You may use an HB pencil for any diagrams or graphs.
- Write your name, centre number and candidate number in the boxes at the top of the page.
- Write your answer to each question in the space provided.
- Do **not** use an erasable pen or correction fluid.
- Do **not** write on any bar codes.
- You may use a calculator.
- You should show all your working and use appropriate units.

INFORMATION

- The total mark for this paper is 40.
- The number of marks for each question or part question is shown in brackets [ ].

For Examiner's Use	
1	
2	
3	
4	
Total	

This document has **12** pages. Any blank pages are indicated.

DC (PB/CB) 331041/2
© UCLES 2024

[Turn over

GradeMax

1 In this experiment, you will use a balancing method to determine the mass of a metre ruler.

Refer to Fig. 1.1.

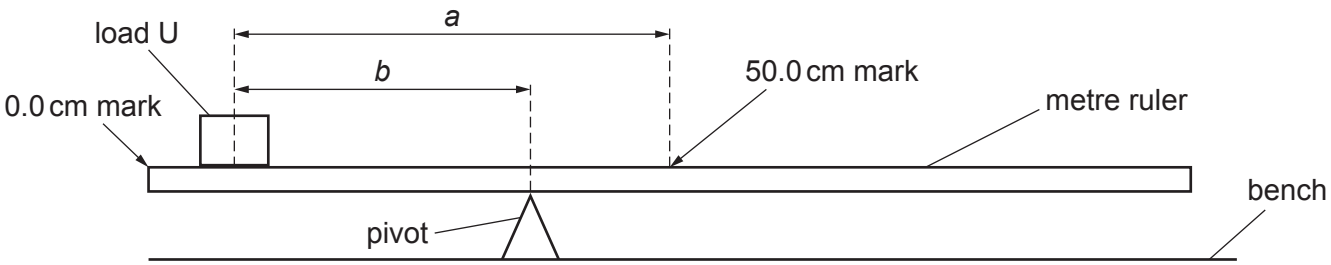

Fig. 1.1

(a) Place the metre ruler on the pivot. Place load U on the metre ruler with its centre at the 5.0 cm mark. Keep load U at the 5.0 cm mark and adjust the position of the metre ruler on the pivot until the metre ruler is as near to being balanced as possible.

The distance *a* between the centre of load U and the 50.0 cm mark on the metre ruler is recorded in Table 1.1.

In Table 1.1, record the position of the pivot.

Calculate and record in Table 1.1, the distance *b* between the centre of load U and the pivot. Use the formula *b* = (position of pivot – position of load U).

Repeat the procedure for positions of load U at the 10.0 cm, 15.0 cm, 20.0 cm and 25.0 cm marks.

Table 1.1

position of load U / cm	*a* / cm	position of pivot / cm	*b* / cm
5.0	45.0		
10.0	40.0		
15.0	35.0		
20.0	30.0		
25.0	25.0		

[2]

© UCLES 2024

(b) (i) Plot a graph of a / cm (y-axis) against b / cm (x-axis).
You do **not** need to start your axes at the origin (0,0).

Draw the best-fit, straight line.

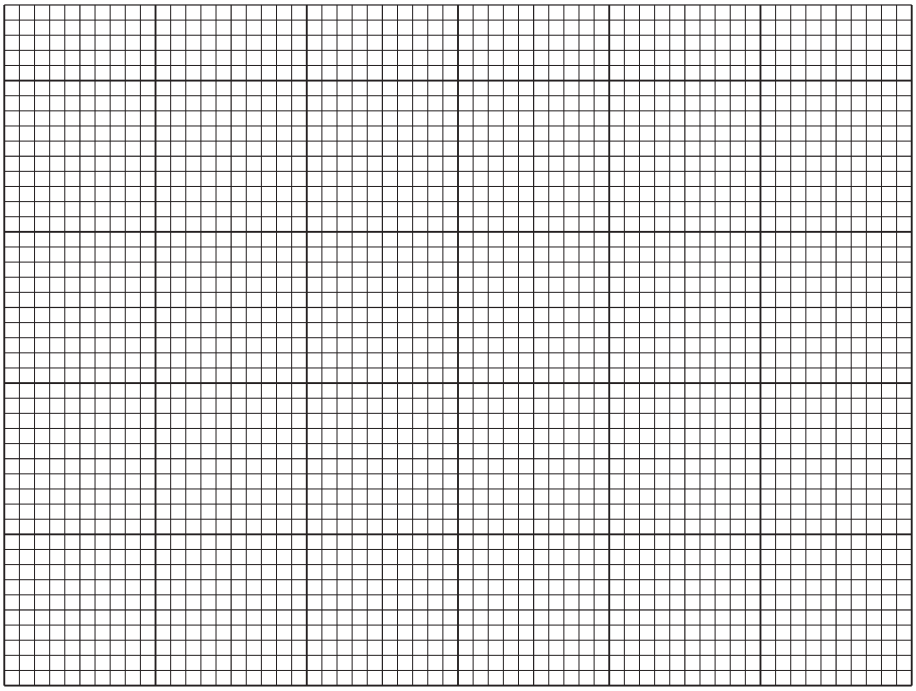

[4]

(ii) Determine the gradient G of the graph. Show clearly **on the graph** how you obtained the necessary information.

G = ... [1]

(c) Calculate the mass M of the metre ruler. Use the equation $M = \frac{k}{G - 1}$, where k = 25 g.

Give an appropriate unit.

M = ... [1]

© UCLES 2024

GradeMax

(d) Explain how you accurately place the centre of load U on the correct mark of the metre ruler each time. You may draw a diagram.

.....

.....

..... [2]

(e) The accuracy of the result obtained by this procedure depends on the metre ruler, without a load, balancing with the pivot at the 50.0 cm mark.
A student finds that this does not happen. He adds a small piece of modelling clay to one end of the metre ruler to correct it.
Suggest if this is a suitable change for this experiment. Explain your answer.

.....

.....

..... [1]

[Total: 11]

© UCLES 2024

GradeMax

2 In this experiment, you will investigate circuits containing different combinations of three resistors connected between terminals P and Q.

Circuit A has been set up for you. It is shown in Fig. 2.1.
The protective resistor must remain in place throughout the experiment.

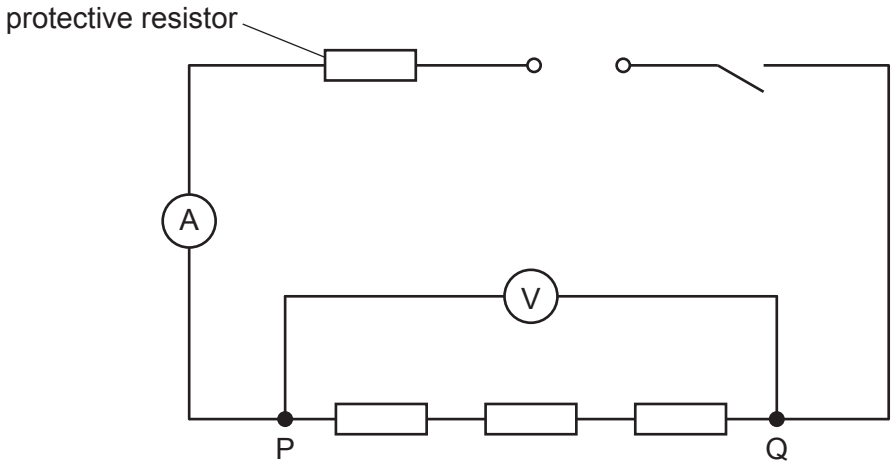

Fig. 2.1

Circuit A

(a) (i) Close the switch.

Measure and record in Table 2.1:
- the potential difference (p.d.) V across terminals P and Q
- the current I in the circuit.

[3]

Open the switch.

Table 2.1

	V/	I/	R/
Circuit A			
Circuit B			
Circuit C			

(ii) Calculate and record in Table 2.1 a resistance R. Use your values of V and I and the equation $R = \frac{V}{I}$.

[1]

(iii) Add units to the column headings in Table 2.1. [1]

© UCLES 2024

[Turn over

Circuit B

(b) Connect the resistors between terminals P and Q as shown in Fig. 2.2.

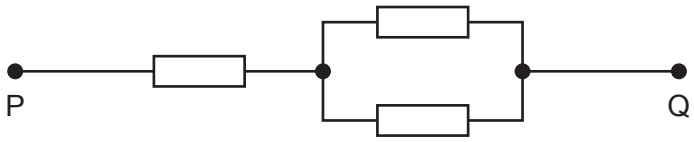

Fig. 2.2

Repeat the procedures in **(a)(i)** and **(a)(ii)**. [1]

Circuit C

(c) Connect the resistors between terminals P and Q as shown in Fig. 2.3.

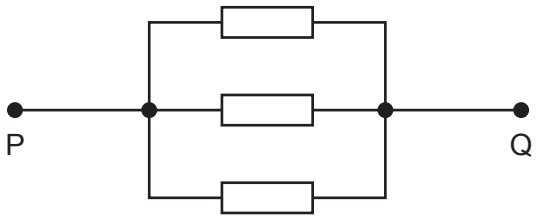

Fig. 2.3

Repeat the procedures in **(a)(i)** and **(a)(ii)**. [1]

(d) (i) Calculate a resistance R_A. Use the value of R from Circuit A and the equation

$$R_A = \frac{R}{3}$$

R_A = ...

Calculate a resistance R_B. Use the value of R from Circuit B and the equation

$$R_B = \frac{R}{1.5}$$

R_B = ...

Calculate a resistance R_C. Use the value of R from Circuit C and the equation

$$R_C = 3R$$

R_C = ...
[2]

© UCLES 2024

(ii) A student suggests that R_A, R_B and R_C should all be equal.
State whether your results support this suggestion. Justify your statement with reference to values from your results.

statement .....

justification .....

.....
[2]

[Total: 11]

GradeMax

3 In this experiment, you will determine the focal length of a converging lens by two methods.

Refer to Fig. 3.1.

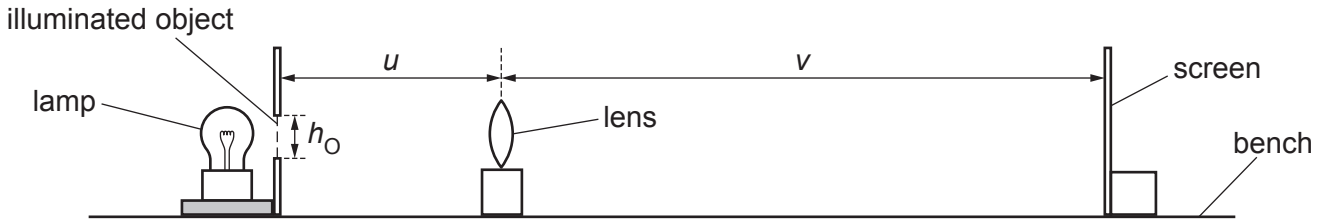

Fig. 3.1

(a) Set up the apparatus as shown in Fig. 3.1.

Set the distance u between the illuminated object and the lens to 20.0 cm.
Switch on the lamp.

Place the screen near the lens. Move the screen until a sharp image of the illuminated object is seen on the screen.

(i) Describe a technique for obtaining an image that is as sharp as possible.

.....

.....

..... [1]

(ii) Measure v, the distance from the lens to the screen as indicated in Fig. 3.1.

v = ... cm

Measure h_O, the height of the illuminated object, indicated in Fig. 3.1.

h_O = ... cm

Measure h_I, the height of the image on the screen.

h_I = ... cm
[2]

Switch off the lamp.

© UCLES 2024

GradeMax

(iii) Calculate a value M for the magnification, using the equation $M = \frac{h_I}{h_O}$.

M = ... [1]

(b) Calculate a value f_1 for the focal length of the lens. Use your values from **(a)(ii)** and **(a)(iii)** and the equation $f_1 = \frac{v}{(M + 1)}$.

Give an appropriate unit.

f_1 = ... [2]

(c) Describe **one** difficulty that is experienced when using a ruler to measure the height of the image. Suggest an improvement to the apparatus to overcome this.
You are **not** required to do an experiment with this improved apparatus.

difficulty .....

.....

improvement .....

.....
[2]

(d) Adjust the position of the lens so that u = 40.0 cm.
Switch on the lamp.

Place the screen near the lens. Move the screen until a sharp image of the illuminated object is seen on the screen.

Measure the distance v between the lens and the screen as indicated in Fig. 3.1.

v = ... cm [1]

Switch off the lamp.

(e) Calculate a second value f_2 for the focal length of the lens. Use your values from **(d)** and the equation $f_2 = \frac{uv}{(u + v)}$.

f_2 = ... [1]

(f) Suggest which value of focal length, f_1 or f_2, might be more accurate. Explain your answer.

.....

..... [1]

[Total: 11]

© UCLES 2024

[Turn over

4 A student investigates the effect of insulation on the cooling of a liquid.

Plan an experiment which will enable her to investigate how changing the thickness of insulation surrounding a beaker affects the rate of cooling of hot water in the beaker.

You are **not** required to do the experiment.

The apparatus available includes:

- a glass beaker
- a supply of hot water
- a lid to fit the beaker
- strips of insulation which can be cut to size.

In your plan:

- list any additional apparatus needed
- explain briefly how to do the experiment, including the measurements to take so that the rate of cooling can be determined
- state the key variables to keep constant
- draw a table, or tables, with column headings, to show how to display the readings (you are **not** required to enter any readings in the table)
- explain how to use the readings to reach a conclusion.

You may draw a diagram if it helps to explain your plan.

© UCLES 2024

GradeMax

.....

.....

.....

.....

.....

.....

.....

.....

.....

.....

.....

.....

.....

.....

.....

.....

.....

.....

.....

..... [7]

© UCLES 2024

GradeMax

BLANK PAGE

Permission to reproduce items where third-party owned material protected by copyright is included has been sought and cleared where possible. Every reasonable effort has been made by the publisher (UCLES) to trace copyright holders, but if any items requiring clearance have unwittingly been included, the publisher will be pleased to make amends at the earliest possible opportunity.

To avoid the issue of disclosure of answer-related information to candidates, all copyright acknowledgements are reproduced online in the Cambridge Assessment International Education Copyright Acknowledgements Booklet. This is produced for each series of examinations and is freely available to download at www.cambridgeinternational.org after the live examination series.

Cambridge Assessment International Education is part of Cambridge Assessment. Cambridge Assessment is the brand name of the University of Cambridge Local Examinations Syndicate (UCLES), which is a department of the University of Cambridge.

© UCLES 2024