GradeMax

Cambridge Assessment International Education

Cambridge IGCSE™

CANDIDATE NAME									
CENTRE NUMBER						CANDIDATE NUMBER				

1144084645

PHYSICS **0625/62**

Paper 6 Alternative to Practical **February/March 2024**

1 hour

You must answer on the question paper.

No additional materials are needed.

INSTRUCTIONS

- Answer **all** questions.
- Use a black or dark blue pen. You may use an HB pencil for any diagrams or graphs.
- Write your name, centre number and candidate number in the boxes at the top of the page.
- Write your answer to each question in the space provided.
- Do **not** use an erasable pen or correction fluid.
- Do **not** write on any bar codes.
- You may use a calculator.
- You should show all your working and use appropriate units.

INFORMATION

- The total mark for this paper is 40.
- The number of marks for each question or part question is shown in brackets [ ].

This document has **16** pages. Any blank pages are indicated.

DC (PQ/JG) 331367/1
© UCLES 2024

[Turn over

GradeMax

1 A student determines the mass of a metre ruler by a balancing method.

He is using the apparatus shown in Fig. 1.1.

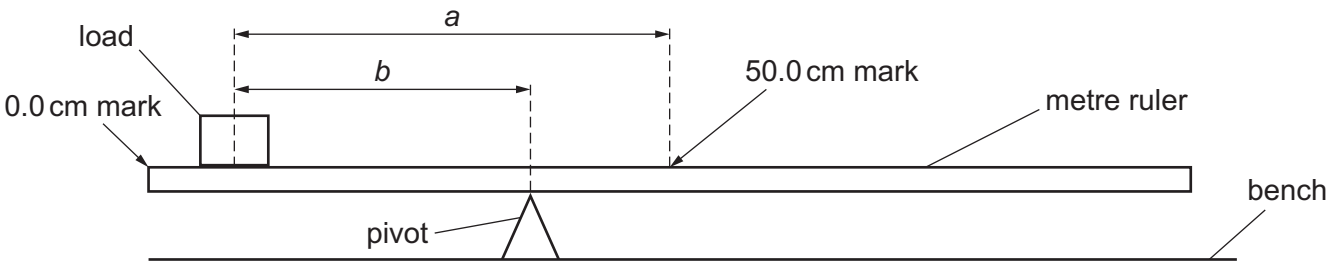

Fig. 1.1

(a) The student places a circular load on the metre ruler shown in Fig. 1.2.

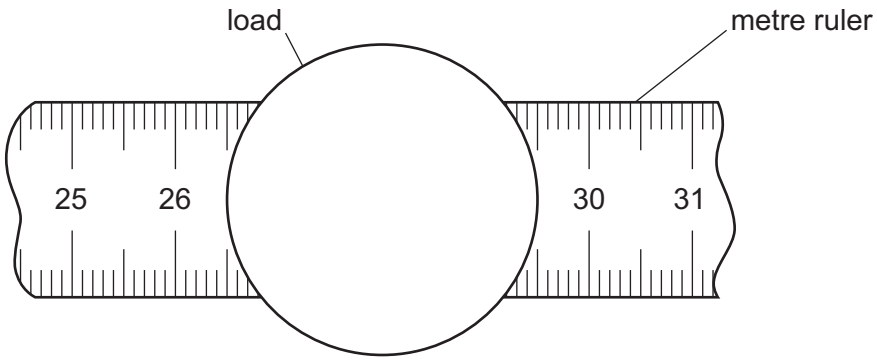

Fig. 1.2 (not to scale)

Determine the distance *d* of the centre of the load from the zero end of the ruler, as shown in Fig. 1.2. Fig. 1.2 is **not** to scale.

d = ... cm [1]

© UCLES 2024

(b) (i) The student adjusts the position of the metre ruler on the pivot until the metre ruler is as near as possible to being balanced.

Describe a technique for ensuring that the ruler is as near as possible to being balanced.

.....

.....

..... [1]

(ii) The student finds that the ruler is as near as possible to being balanced when the pivot is at the 47.6 cm mark.
Calculate the distance *a* of the centre of the load from the 50.0 cm mark, as shown in Fig. 1.1.
Use your value of *d* from **(a)** and the equation $a = (50.0\,\text{cm} - d)$.

a = ... cm

Calculate the distance *b* of the centre of the load from the pivot, as shown in Fig. 1.1.
Use your value of *d* from **(a)** and the equation *b* = (position of pivot – *d*).

b = ... cm
[2]

© UCLES 2024

(c) The student moves the load so that its centre is above the 5.0 cm mark and balances the metre ruler.
He repeats this procedure for the load at the 10.0 cm mark, 15.0 cm mark, 20.0 cm mark and 25.0 cm mark.
His results are shown in Table 1.1.

Table 1.1

position of load / cm	*a* / cm	*b* / cm
5.0	45.0	40.5
10.0	40.0	35.2
15.0	35.0	31.5
20.0	30.0	26.0
25.0	25.0	22.5

(i) Plot a graph of *a* / cm, (*y*-axis) against *b* / cm, (*x*-axis). Use the values in Table 1.1.
You do **not** need to start your axes at the origin (0,0).

Draw the best-fit straight line.

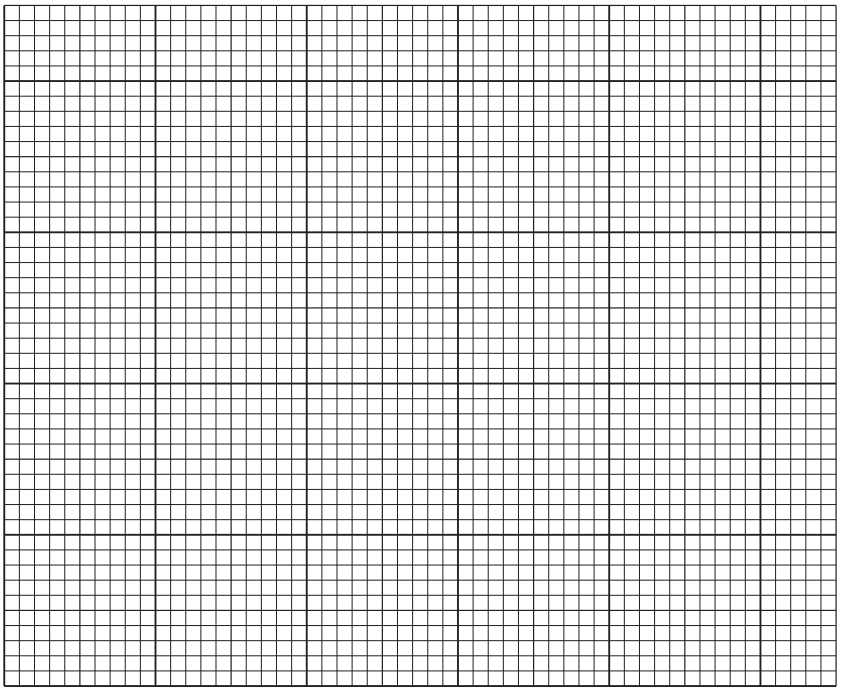

[4]

(ii) Determine the gradient *G* of the graph. Show clearly **on the graph** how you obtained the necessary information.

G = ... [1]

© UCLES 2024

(d) Calculate the mass M of the metre ruler using the equation $M = \frac{k}{(G-1)}$,

where $k = 25\,\text{g}$.

Give an appropriate unit.

$M =$ ..... [1]

(e) The accuracy of the result obtained by this procedure depends on the metre ruler, without a load, balancing with the pivot at the 50.0 cm mark.
A student finds that this does not happen. She adds a small piece of modelling clay to one end of the metre ruler to correct it.
Suggest if this is a suitable change for this experiment. Explain your answer.

.....

.....

..... [1]

[Total: 11]

© UCLES 2024

GradeMax

2 A student investigates a circuit containing different combinations of three resistors.

She first uses Circuit A, shown in Fig. 2.1.

Circuit A

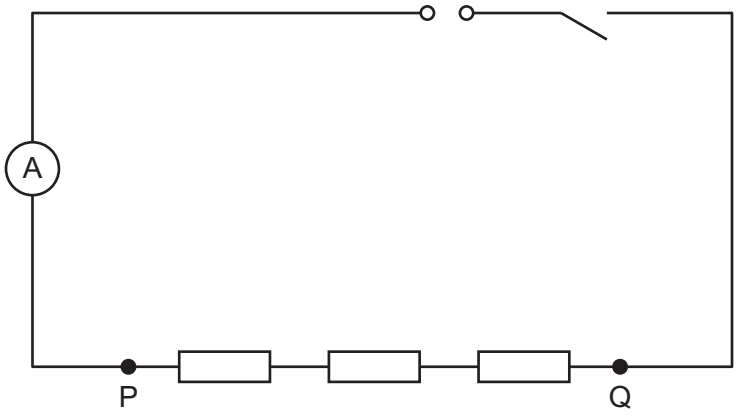

Fig. 2.1

(a) On Fig. 2.1, draw a voltmeter connected to measure the potential difference (p.d.) *V* for terminals P and Q. [1]

(b) The student measures the potential difference *V* for terminals P and Q and measures the current *I* in the circuit. The meters are shown in Fig. 2.2 and Fig. 2.3.

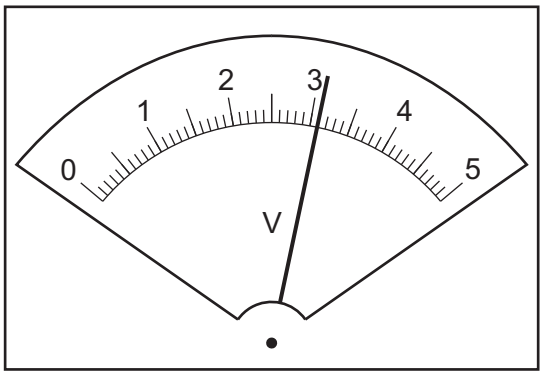

Fig. 2.2

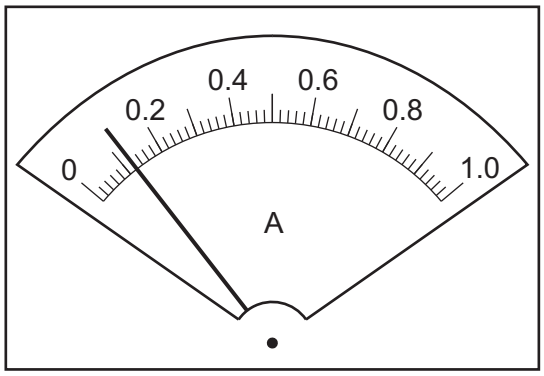

Fig. 2.3

Read and record, in the first line of Table 2.1, the values of *V* and *I* shown on the meters in Fig. 2.2 and Fig. 2.3. [2]

Table 2.1

	V/	*I*/	*R*/
Circuit A			
Circuit B	2.9	0.22	
Circuit C	2.6	0.86	

© UCLES 2024

(c)

Circuit B

The student connects the resistors between terminals P and Q as shown in Fig. 2.4.
She measures and records, in Table 2.1, the values of V and I for this circuit.

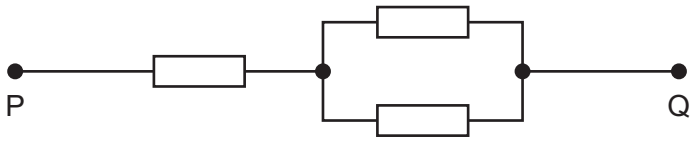

Fig. 2.4

Circuit C

The student connects the resistors between terminals P and Q as shown in Fig. 2.5.
She measures and records, in Table 2.1, the values of V and I for this circuit.

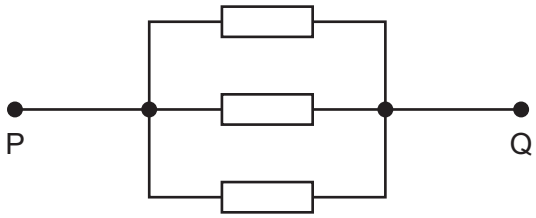

Fig. 2.5

(i) Calculate and record in Table 2.1 a resistance R for each circuit. Use the values of V and I from Table 2.1 and the equation $R = \frac{V}{I}$. [2]

(ii) Add units to the column headings in Table 2.1. [1]

© UCLES 2024

GradeMax

(d) **(i)** Calculate a resistance R_A. Use the value of R from Circuit A and the equation

$$R_A = \frac{R}{3}$$

R_A = ...

Calculate a resistance R_B. Use the value of R from Circuit B and the equation

$$R_B = \frac{R}{1.5}$$

R_B = ...

Calculate a resistance R_C. Use the value of R from Circuit C and the equation

$$R_C = 3R$$

R_C = ...

[1]

(ii) A student suggests that R_A, R_B and R_C should all be equal.
State whether your results support this suggestion. Justify your statement with reference to values from your results.

statement .....

justification .....

.....

[2]

(e) A student investigates the resistors in Circuit A using a variable resistor to change the current in the circuit.

(i) In the space below, draw the symbol for a variable resistor.

[1]

(ii) Suggest **one** advantage of using a variable resistor to change the current in the circuit.

.....

..... [1]

[Total: 11]

© UCLES 2024

GradeMax

3 A student determines the focal length of a converging lens by two methods.

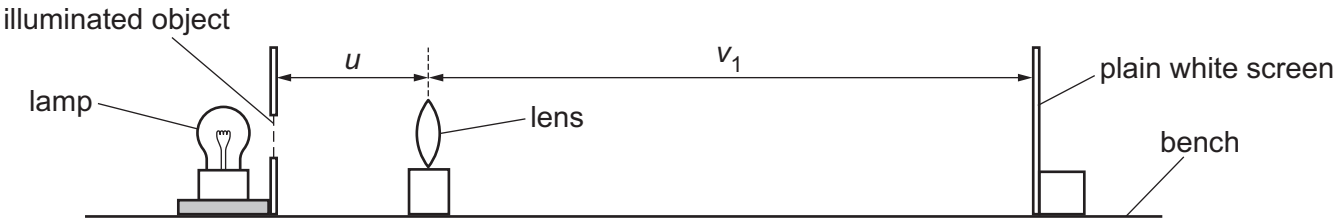

Fig. 3.1

(a) The student sets up the apparatus as shown in Fig. 3.1.

Suggest **one** precaution that must be taken when setting up the apparatus to ensure accurate measurements.

.....

..... [1]

(b) The student sets the distance u between the illuminated object and the lens to 20.0 cm.

He places the screen near the lens and moves the screen until a sharp image of the illuminated object is seen on the screen.

(i) Describe a technique for obtaining an image that is as sharp as possible.

.....

.....

..... [1]

(ii) Measure v_1, the distance from the lens to the screen on Fig. 3.1.

v_1 = ... cm

Fig. 3.1 is drawn to 1/10th scale.
Calculate V_1, the actual distance from the lens to the screen.

V_1 = ... cm
[2]

© UCLES 2024

[Turn over

GradeMax

(c) The shapes of the illuminated object and the image seen on the screen are shown full size in Fig. 3.2 and Fig. 3.3.

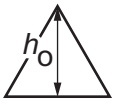

Fig. 3.2

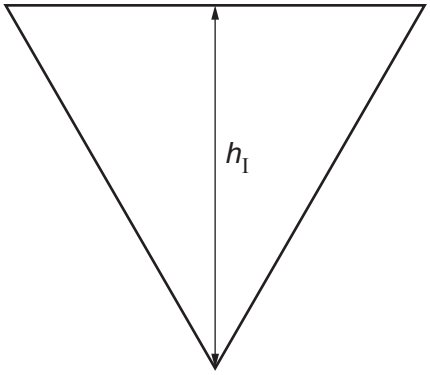

Fig. 3.3

(i) Measure h_O, the height of the illuminated object, as shown in Fig. 3.2.

h_O = ... cm

Measure h_I, the height of the image on the screen, as shown in Fig. 3.3.

h_I = ... cm
[1]

(ii) Calculate a value M for the magnification, using the equation $M = \frac{h_I}{h_O}$.

M = ... [1]

(d) Calculate a value f_1 for the focal length of the lens. Use your values from **(b)(ii)** and **(c)(ii)** and the equation $f_1 = \frac{V_1}{(M + 1)}$.

f_1 = ... [1]

(e) Describe **one** difficulty that is experienced when using a ruler to measure the height of the image **in this experiment**. Suggest an improvement to the apparatus to overcome this.

difficulty .....

.....

improvement .....

.....
[2]

© UCLES 2024

(f) The student adjusts the position of the lens so that u = 40.0 cm and obtains a new value V_2 for the distance between the lens and the screen.

V_2 = 25.1 cm

Calculate a second value f_2 for the focal length of the lens, using the equation

$$f_2 = \frac{uV_2}{(u + V_2)} .$$

f_2 = ... [1]

(g) Suggest which value of focal length, f_1 or f_2, might be more accurate. Explain your answer.

.....

..... [1]

[Total: 11]

© UCLES 2024

GradeMax

4 A student investigates the effect of insulation on the cooling of a liquid.

Plan an experiment which will enable her to investigate how changing the thickness of insulation surrounding a beaker affects the rate of cooling of hot water in the beaker.

The apparatus available includes:

- a glass beaker
- a supply of hot water
- a lid to fit the beaker
- strips of insulation which can be cut to size.

In your plan:

- list any additional apparatus needed
- explain briefly how to do the experiment, including the measurements to take so that the rate of cooling can be determined
- state the key variables to keep constant
- draw a table, or tables, with column headings, to show how to display the readings (you are **not** required to enter any readings in the table)
- explain how to use the readings to reach a conclusion.

You may draw a diagram if it helps to explain your plan.

© UCLES 2024

GradeMax

.....

.....

.....

.....

.....

.....

.....

.....

.....

.....

.....

.....

.....

.....

.....

.....

.....

.....

.....

.....

.....

..... [7]

© UCLES 2024

GradeMax

BLANK PAGE

© UCLES 2024

GradeMax

BLANK PAGE

© UCLES 2024

GradeMax

BLANK PAGE

Permission to reproduce items where third-party owned material protected by copyright is included has been sought and cleared where possible. Every reasonable effort has been made by the publisher (UCLES) to trace copyright holders, but if any items requiring clearance have unwittingly been included, the publisher will be pleased to make amends at the earliest possible opportunity.

To avoid the issue of disclosure of answer-related information to candidates, all copyright acknowledgements are reproduced online in the Cambridge Assessment International Education Copyright Acknowledgements Booklet. This is produced for each series of examinations and is freely available to download at www.cambridgeinternational.org after the live examination series.

Cambridge Assessment International Education is part of Cambridge Assessment. Cambridge Assessment is the brand name of the University of Cambridge Local Examinations Syndicate (UCLES), which is a department of the University of Cambridge.

© UCLES 2024