GradeMax

* 0000800000001 *

Cambridge Assessment International Education

Cambridge IGCSE™

CANDIDATE NAME

CENTRE NUMBER

CANDIDATE NUMBER

1589380058

PHYSICS **0625/32**

Paper 3 Theory (Core) **February/March 2025**

1 hour 15 minutes

You must answer on the question paper.

No additional materials are needed.

INSTRUCTIONS

- Answer **all** questions.
- Use a black or dark blue pen. You may use an HB pencil for any diagrams or graphs.
- Write your name, centre number and candidate number in the boxes at the top of the page.
- Write your answer to each question in the space provided.
- Do **not** use an erasable pen or correction fluid.
- Do **not** write on any bar codes.
- You may use a calculator.
- You should show all your working and use appropriate units.
- Take the weight of 1.0 kg to be 9.8 N (acceleration of free fall = 9.8 m / s^2).

INFORMATION

- The total mark for this paper is 80.
- The number of marks for each question or part question is shown in brackets [ ].

This document has **16** pages.

DC (PB/CT) 345554/2

© UCLES 2025

[Turn over

GradeMax

1 Fig. 1.1 shows the speed-time graph for a ball falling through the air.

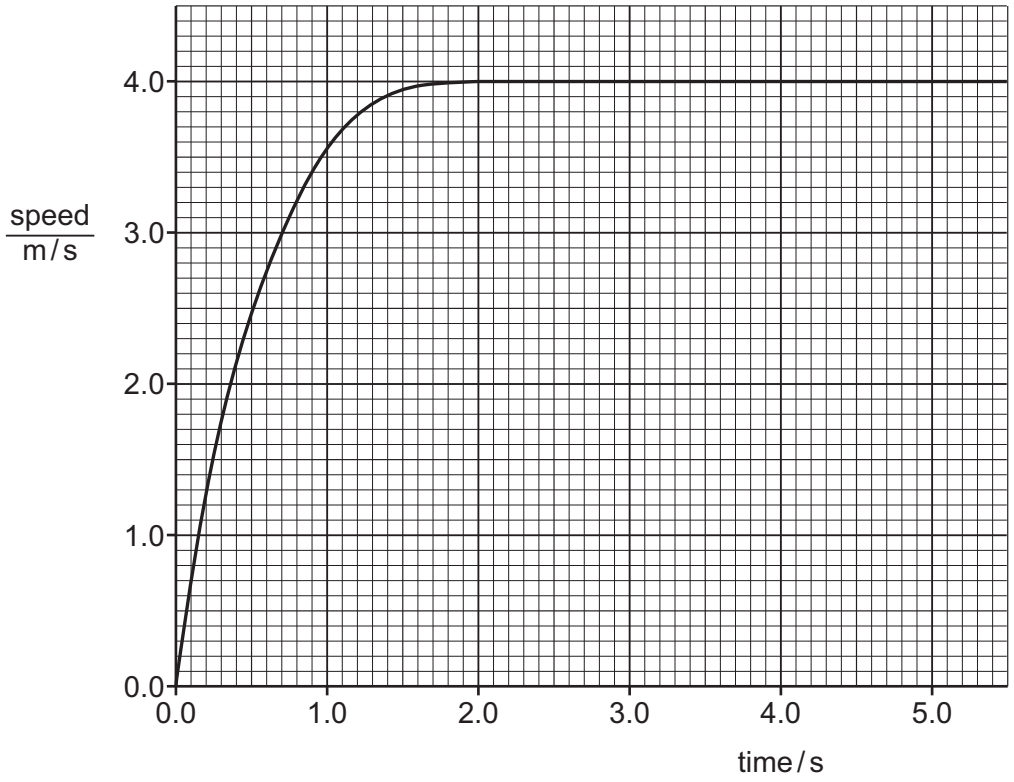

Fig. 1.1

(a) Determine the speed of the ball at time = 1.0 s.

speed = ... m/s [1]

(b) Describe the speed of the ball between time = 2.0 s and time = 5.0 s.

..... [1]

(c) Calculate the distance moved by the ball between time = 2.0 s and time = 5.0 s.

distance = ... m [3]

DO NOT WRITE IN THIS MARGIN
DO NOT WRITE IN THIS MARGIN
DO NOT WRITE IN THIS MARGIN
DO NOT WRITE IN THIS MARGIN
DO NOT WRITE IN THIS MARGIN

GradeMax

(d) Fig. 1.2 shows the two vertical forces acting on the ball at time = 3.0 s.

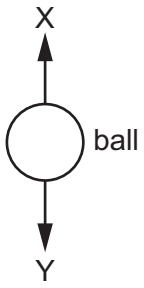

Fig. 1.2

Give the term used to describe each force.

upward force X is ……

downward force Y is ……

[2]

[Total: 7]

DO NOT WRITE IN THIS MARGIN
DO NOT WRITE IN THIS MARGIN
DO NOT WRITE IN THIS MARGIN
DO NOT WRITE IN THIS MARGIN
DO NOT WRITE IN THIS MARGIN

GradeMax

2 **(a)** A student determines the density of a liquid, by using the equipment shown in Fig. 2.1.

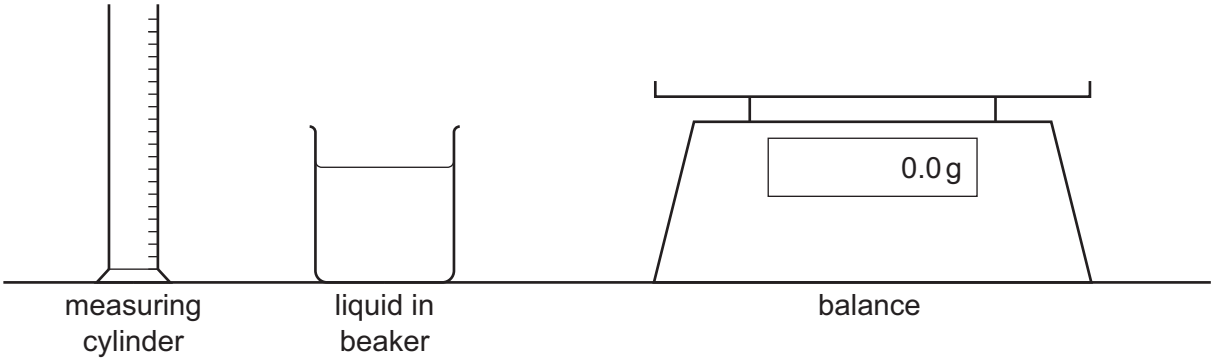

Fig. 2.1

Describe how the student uses the equipment to determine the density of the liquid.

.....

.....

.....

.....

.....

..... [3]

(b) Fig. 2.2 shows a metal block.

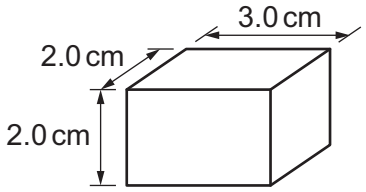

Fig. 2.2

The density of the metal is $8.0\,g/cm^3$.

Calculate the mass of the metal block.

mass = ... g [4]

[Total: 7]

© UCLES 2025

DO NOT WRITE IN THIS MARGIN
DO NOT WRITE IN THIS MARGIN
DO NOT WRITE IN THIS MARGIN
DO NOT WRITE IN THIS MARGIN
DO NOT WRITE IN THIS MARGIN

GradeMax

DO NOT WRITE IN THIS MARGIN
DO NOT WRITE IN THIS MARGIN
DO NOT WRITE IN THIS MARGIN
DO NOT WRITE IN THIS MARGIN
DO NOT WRITE IN THIS MARGIN

3 Fig. 3.1 shows a cross-section through the centre of a solid cone and a cross-section through the centre of a solid cuboid. The cone and the cuboid are placed on the ground as shown in Fig. 3.1.
The solid cone is more stable than the solid cuboid.
The symbol × indicates the position of the centre of gravity of each object.

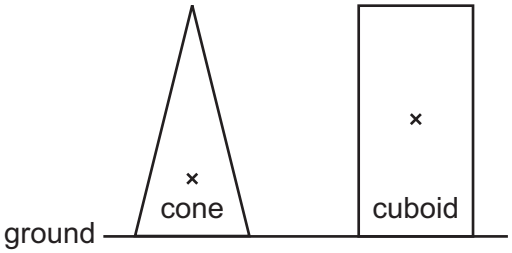

Fig. 3.1

(a) Explain why the solid cone in Fig. 3.1 is more stable than the solid cuboid.

.....

..... [1]

(b) The weight of the solid cuboid is 48 N. The area of the solid cuboid in contact with the ground is 32 cm^2.

Calculate the pressure exerted by the solid cuboid on the ground.

pressure on ground = ... N / cm^2 [3]

(c) A horizontal force of 15 N tilts the solid cone, as shown in Fig. 3.2.

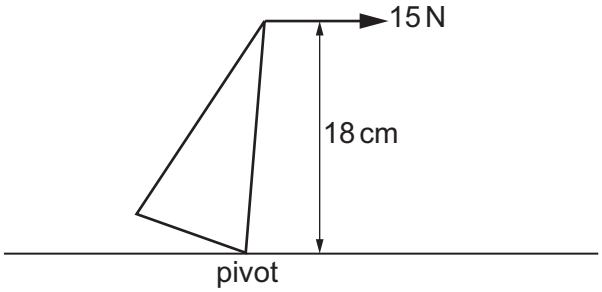

Fig. 3.2

Calculate the moment of the 15 N force about the pivot.

moment = ... N cm [3]

[Total: 7]

GradeMax

4 A power station uses biofuels to generate electrical power.

(a) Describe how the power station generates electrical power from the chemical energy stored in biofuels.

.....

.....

.....

.....

.....

..... [4]

(b) State **one** advantage and **one** disadvantage, apart from cost, of generating electrical power using biofuels compared with generating electrical power using fossil fuels.

advantage .....

disadvantage .....

[2]

[Total: 6]

DO NOT WRITE IN THIS MARGIN
DO NOT WRITE IN THIS MARGIN
DO NOT WRITE IN THIS MARGIN
DO NOT WRITE IN THIS MARGIN
DO NOT WRITE IN THIS MARGIN

GradeMax

DO NOT WRITE IN THIS MARGIN
DO NOT WRITE IN THIS MARGIN
DO NOT WRITE IN THIS MARGIN
DO NOT WRITE IN THIS MARGIN
DO NOT WRITE IN THIS MARGIN

5 An electric motor lifts a load, as shown in Fig. 5.1.

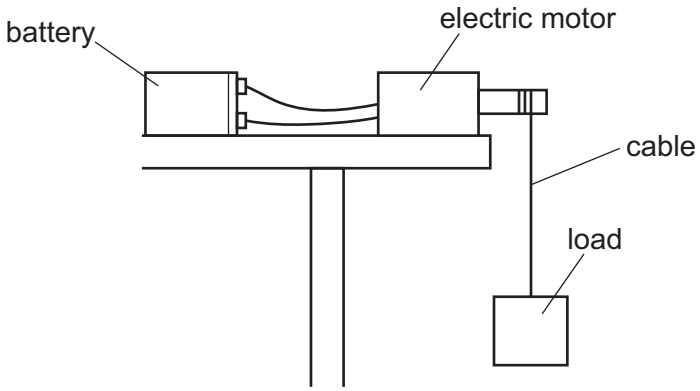

Fig. 5.1

(a) After lifting the load, the motor is switched off. Fig. 5.2 represents the transfer of energy from the battery to the load in Fig. 5.1.

In Fig. 5.2, add the names of the energy stores.

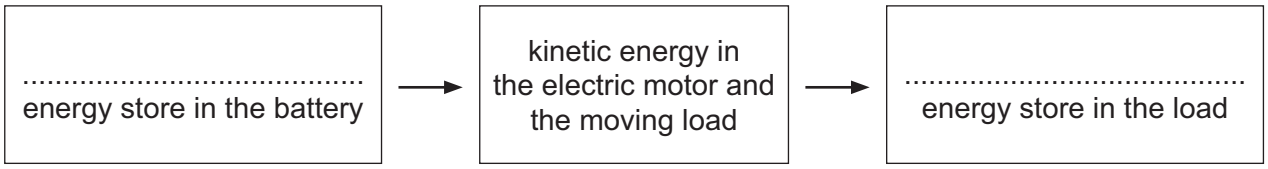

Fig. 5.2

[2]

(b) The weight of the load is 8.0 N. The motor lifts the load through a vertical distance of 0.60 m.

Calculate the work done on the load.

work done on load = ... J [3]

(c) The current in the motor is 0.40 A. The potential difference across the motor is 6.0 V.

Calculate the power of the electric motor.

power of electric motor = ... W [3]

[Total: 8]

GradeMax

6 A student warms some water in a metal container using an electric heater, as shown in Fig. 6.1.

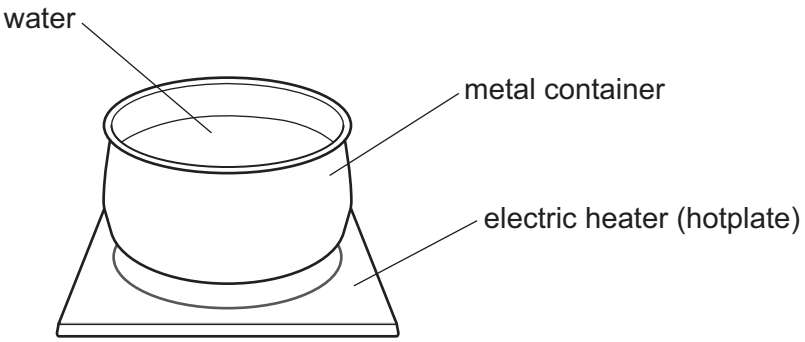

Fig. 6.1

(a) Describe the arrangement, separation and motion of the particles in liquid water.

.....

.....

.....

..... [3]

(b) State how thermal energy moves through the metal container from the heater to the water.

..... [1]

(c) Describe how thermal energy spreads throughout the water.

.....

.....

.....

..... [3]

(d) The water is heated until it is boiling. The air pressure in the room is standard atmospheric pressure.

State the temperature at which the water boils.

temperature = ...°C [1]

[Total: 8]

DO NOT WRITE IN THIS MARGIN
DO NOT WRITE IN THIS MARGIN
DO NOT WRITE IN THIS MARGIN
DO NOT WRITE IN THIS MARGIN
DO NOT WRITE IN THIS MARGIN

7 **(a)** Fig. 7.1 represents a ray of red light entering one side of a glass block.

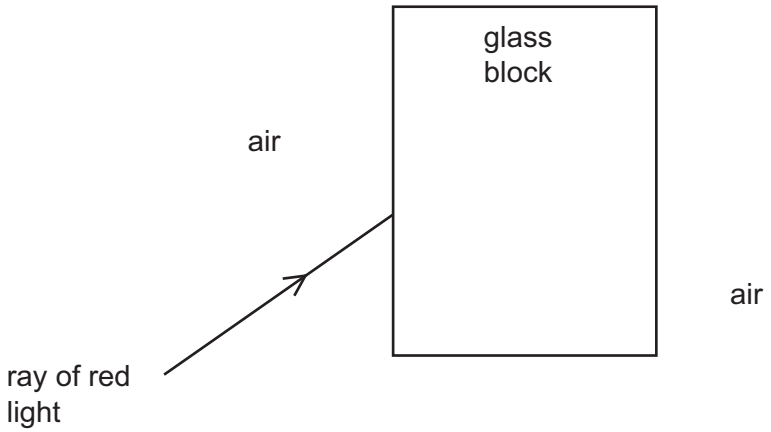

Fig. 7.1

On Fig. 7.1 draw the path of the ray of red light through the glass block and into the air. [2]

(b) Fig. 7.2 represents the dispersion of white light by a glass prism.

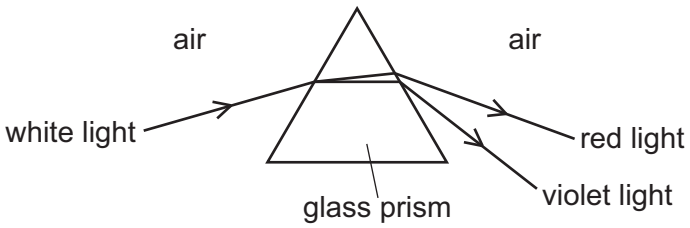

Fig. 7.2

Two of the colours of the visible spectrum are shown in Fig. 7.2.

State the other five colours of the visible spectrum in the correct order.

red

.....

.....

.....

.....

.....

violet

[1]

DO NOT WRITE IN THIS MARGIN
DO NOT WRITE IN THIS MARGIN
DO NOT WRITE IN THIS MARGIN
DO NOT WRITE IN THIS MARGIN
DO NOT WRITE IN THIS MARGIN

GradeMax

(c) Fig. 7.3 represents the regions of the electromagnetic spectrum.

radio waves	microwaves	infrared waves	visible light		X-rays	gamma rays

Fig. 7.3

(i) In Fig. 7.3, one region is unlabelled.
State the name of the unlabelled region.

..... [1]

(ii) Describe **one** use of gamma rays.

..... [1]

(iii) Describe **one** harmful effect on people of excessive exposure to gamma rays.

..... [1]

[Total: 6]

DO NOT WRITE IN THIS MARGIN
DO NOT WRITE IN THIS MARGIN
DO NOT WRITE IN THIS MARGIN
DO NOT WRITE IN THIS MARGIN
DO NOT WRITE IN THIS MARGIN

GradeMax

DO NOT WRITE IN THIS MARGIN
DO NOT WRITE IN THIS MARGIN
DO NOT WRITE IN THIS MARGIN
DO NOT WRITE IN THIS MARGIN
DO NOT WRITE IN THIS MARGIN

8 A student strikes a tuning fork on a wooden block. The tuning fork is held close to the students' ear as shown in Fig. 8.1.



Fig. 8.1

(a) Describe how the tuning fork produces sound.

..... [1]

(b) State the normal frequency range of sounds that humans can hear. Give the unit.

from ..... to ..... [2]

(c) Two students determine a value for the speed of sound in air. Fig. 8.2 illustrates the method they use.

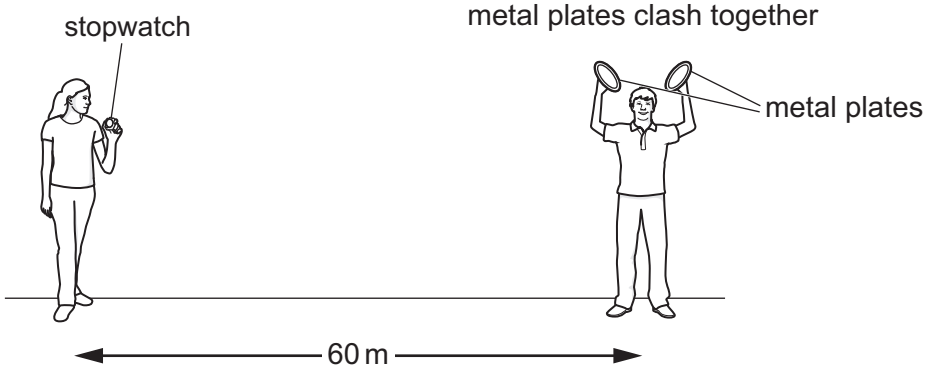

Fig. 8.2 (Not to scale)

The girl starts the stopwatch when she sees the metal plates clash together. She stops the stopwatch when she hears the sound of the clashing metal plates. The students use the time on the stopwatch to calculate the speed of sound.

The value for the speed of sound obtained by the students is different from the true value for the speed of sound in air.
Explain why the students' value is different.

.....

.....

..... [1]

[Total: 4]

GradeMax

9 A student set up the electrical circuit that is shown in Fig. 9.1.

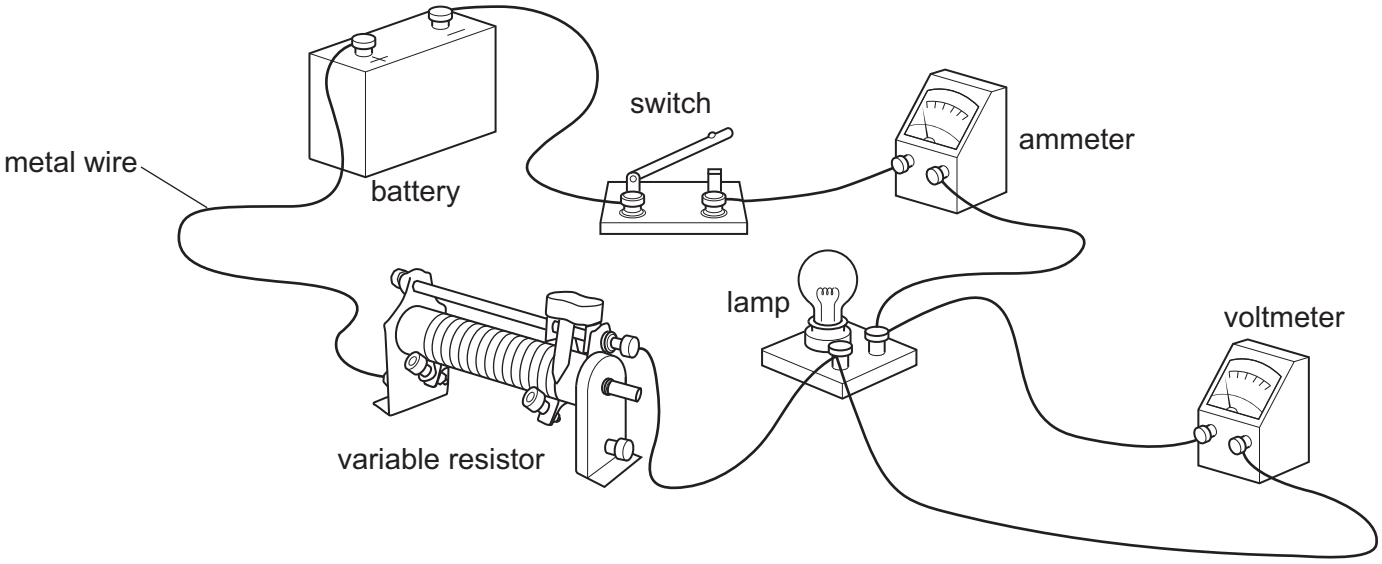

Fig. 9.1

(a) Fig. 9.2 shows part of the circuit diagram for the circuit in Fig. 9.1.

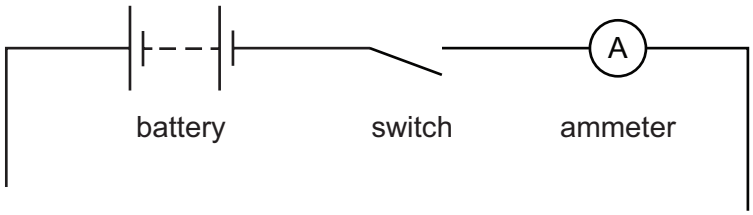

Fig. 9.2

Complete the circuit diagram in Fig. 9.2 to represent the circuit in Fig. 9.1. Use standard circuit symbols. [4]

DO NOT WRITE IN THIS MARGIN
DO NOT WRITE IN THIS MARGIN
DO NOT WRITE IN THIS MARGIN
DO NOT WRITE IN THIS MARGIN
DO NOT WRITE IN THIS MARGIN

DO NOT WRITE IN THIS MARGIN
DO NOT WRITE IN THIS MARGIN
DO NOT WRITE IN THIS MARGIN
DO NOT WRITE IN THIS MARGIN
DO NOT WRITE IN THIS MARGIN

(b) The potential difference (p.d.) across the lamp is 11 V and the current in the lamp is 0.44 A.

Calculate the resistance of the lamp.

resistance = ... Ω [3]

(c) The student moves the sliding contact from position A to position B, as shown in Fig. 9.3.

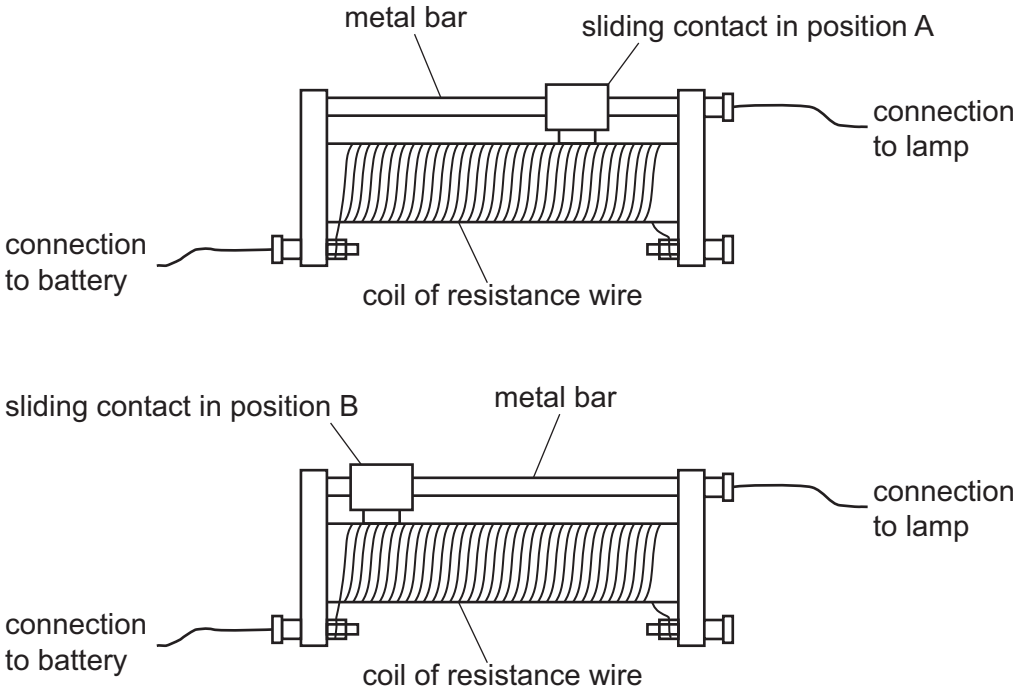

Fig. 9.3

State and explain any effect on the current in the circuit when the sliding contact is moved from position A to position B.

.....

.....

.....

..... [2]

[Total: 9]

GradeMax

10 Fig. 10.1 shows the apparatus used by a student to demonstrate electromagnetic induction.

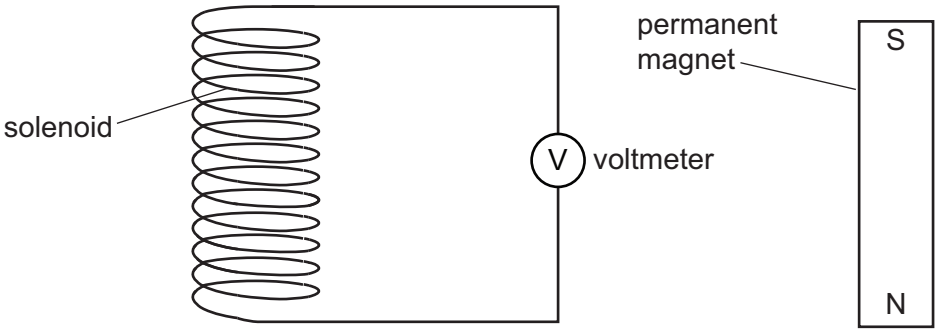

Fig. 10.1

(a) Describe how the student uses the apparatus to demonstrate electromagnetic induction.

.....

.....

..... [2]

(b) State **two** separate changes the student must make to the apparatus to increase the electromotive force (e.m.f.) induced in the coil.

1 .....

2 .....

[2]

(c) Fig. 10.2 represents a transformer.

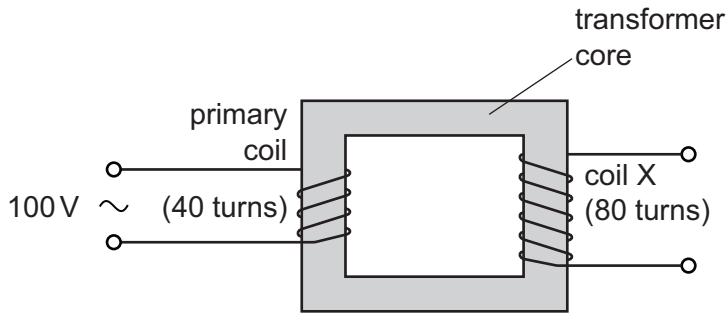

Fig. 10.2

(i) State a suitable material for the transformer core.

..... [1]

(ii) State the term used to describe coil X in Fig. 10.2.

..... [1]

(iii) State the term used to describe the type of transformer represented in Fig. 10.2.

..... [1]

[Total: 7]

DO NOT WRITE IN THIS MARGIN
DO NOT WRITE IN THIS MARGIN
DO NOT WRITE IN THIS MARGIN
DO NOT WRITE IN THIS MARGIN
DO NOT WRITE IN THIS MARGIN

GradeMax

DO NOT WRITE IN THIS MARGIN
DO NOT WRITE IN THIS MARGIN
DO NOT WRITE IN THIS MARGIN
DO NOT WRITE IN THIS MARGIN
DO NOT WRITE IN THIS MARGIN

11 **(a)** Table 11.1 gives information about the particles in an atom.

Table 11.1

name of particle	relative charge	location in the atom
proton	+1	in the nucleus
neutron		
electron		orbiting the nucleus

Complete the table by writing the correct information in the three empty spaces. [3]

(b) State the relative charge on an alpha particle.

..... [1]

(c) Compare the penetrating abilities of alpha particles, beta particles and gamma rays.

.....

.....

.....

..... [2]

[Total: 6]

GradeMax

12 Fig. 12.1 represents the Earth's orbit of the Sun.

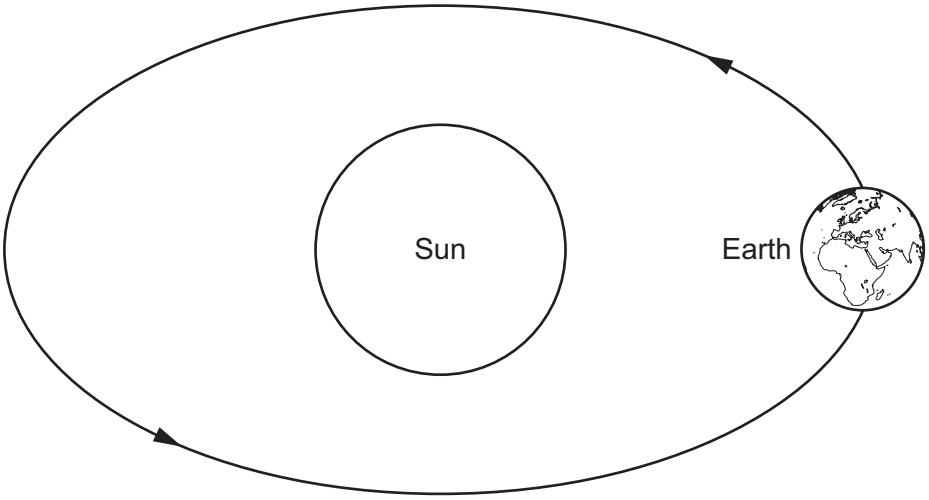

Fig. 12.1 (Not to scale)

(a) State the term used to describe the force that keeps the Earth in orbit around the Sun.

..... [1]

(b) Explain why the Earth has an annual cycle of seasons.

.....

.....

..... [1]

(c) The distance of the Earth from the Sun is 1.48×10^{11} m. The speed of light is 3.0×10^{8} m/s.

Calculate the time it takes light from the Sun to reach the Earth.

time taken to reach Earth = ... s [3]

[Total: 5]

Permission to reproduce items where third-party owned material protected by copyright is included has been sought and cleared where possible. Every reasonable effort has been made by the publisher (UCLES) to trace copyright holders, but if any items requiring clearance have unwittingly been included, the publisher will be pleased to make amends at the earliest possible opportunity.

To avoid the issue of disclosure of answer-related information to candidates, all copyright acknowledgements are reproduced online in the Cambridge Assessment International Education Copyright Acknowledgements Booklet. This is produced for each series of examinations and is freely available to download at www.cambridgeinternational.org after the live examination series.

Cambridge Assessment International Education is part of Cambridge Assessment. Cambridge Assessment is the brand name of the University of Cambridge Local Examinations Syndicate (UCLES), which is a department of the University of Cambridge.

© UCLES 2025

DO NOT WRITE IN THIS MARGIN
DO NOT WRITE IN THIS MARGIN
DO NOT WRITE IN THIS MARGIN
DO NOT WRITE IN THIS MARGIN
DO NOT WRITE IN THIS MARGIN