GradeMax

* 0000800000001 *

Cambridge Assessment International Education

Cambridge IGCSE™

CANDIDATE NAME

CENTRE NUMBER

CANDIDATE NUMBER

* 5 2 1 0 4 5 6 3 4 2 *

PHYSICS **0625/42**

Paper 4 Theory (Extended) **February/March 2025**

1 hour 15 minutes

You must answer on the question paper.

No additional materials are needed.

INSTRUCTIONS

- Answer **all** questions.
- Use a black or dark blue pen. You may use an HB pencil for any diagrams or graphs.
- Write your name, centre number and candidate number in the boxes at the top of the page.
- Write your answer to each question in the space provided.
- Do **not** use an erasable pen or correction fluid.
- Do **not** write on any bar codes.
- You may use a calculator.
- You should show all your working and use appropriate units.
- Take the weight of 1.0 kg to be 9.8 N (acceleration of free fall = 9.8 m / s^2).

INFORMATION

- The total mark for this paper is 80.
- The number of marks for each question or part question is shown in brackets [ ].

This document has **20** pages. Any blank pages are indicated.

DC (WW/JG) 345555/3

© UCLES 2025

[Turn over

GradeMax

1 Fig. 1.1 shows a force–extension graph for a spring.

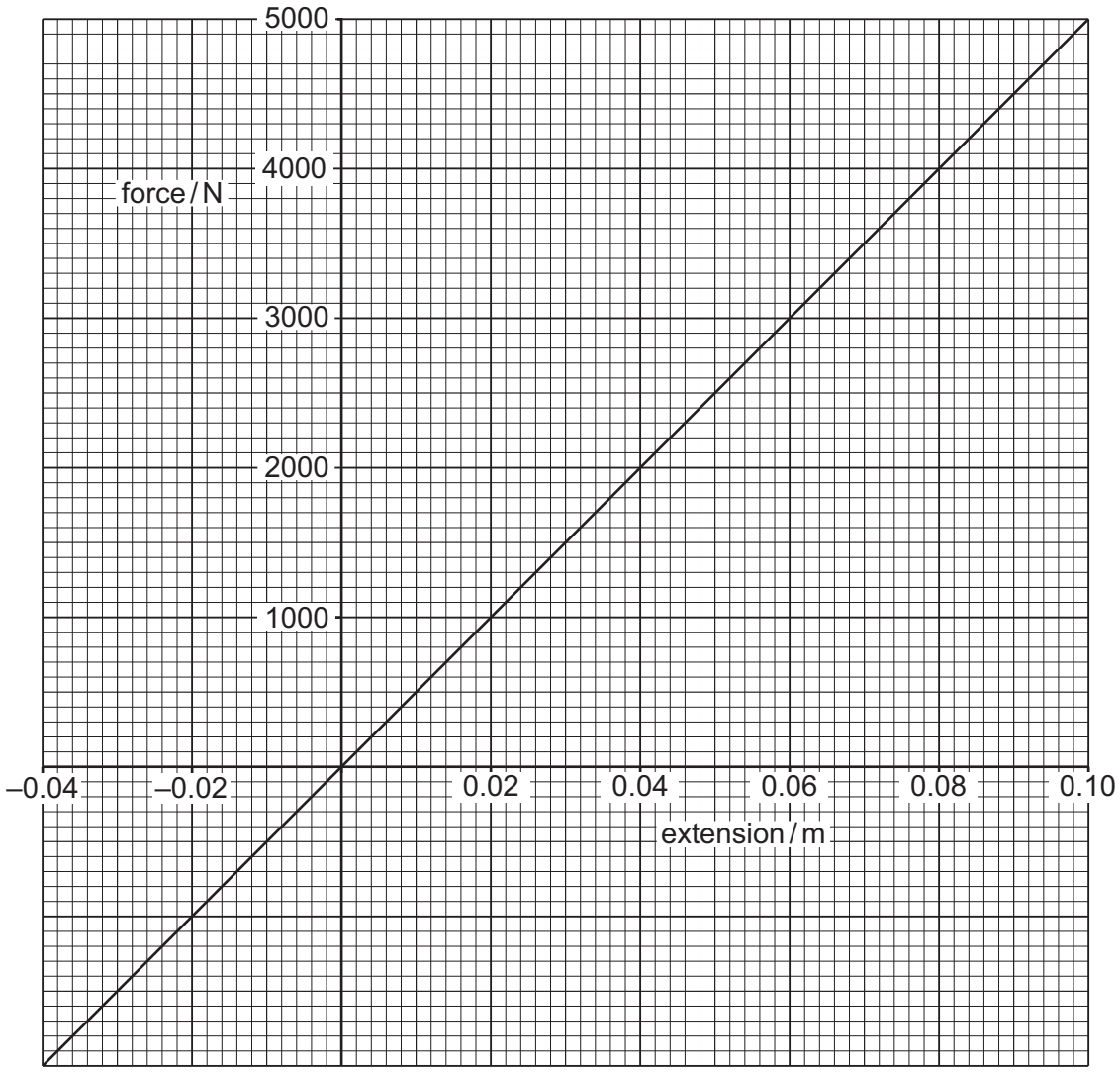

Fig. 1.1

(a) Calculate the spring constant k of the spring.

k = ... [2]

(b) A student states that the spring has **not** reached the limit of proportionality when a force of 4500 N is applied to it.

State how the graph shows that this statement is true.

.....

..... [1]

DO NOT WRITE IN THIS MARGIN
DO NOT WRITE IN THIS MARGIN
DO NOT WRITE IN THIS MARGIN
DO NOT WRITE IN THIS MARGIN
DO NOT WRITE IN THIS MARGIN

GradeMax

(c) Springs can be compressed by forces. The spring described by Fig. 1.1 is compressed by a force F and has an extension of –0.025 m.

Determine F.

F = ... [2]

(d) State whether force is a scalar quantity or a vector quantity. Explain your answer.

.....

..... [1]

[Total: 6]

DO NOT WRITE IN THIS MARGIN
DO NOT WRITE IN THIS MARGIN
DO NOT WRITE IN THIS MARGIN
DO NOT WRITE IN THIS MARGIN
DO NOT WRITE IN THIS MARGIN

GradeMax

2 Trolley A and trolley B are on a horizontal, frictionless bench. Trolley A moves to the right with a constant velocity $u = 0.44\,\text{m/s}$. Trolley B is stationary.

Fig. 2.1 shows trolley A before it collides with trolley B.

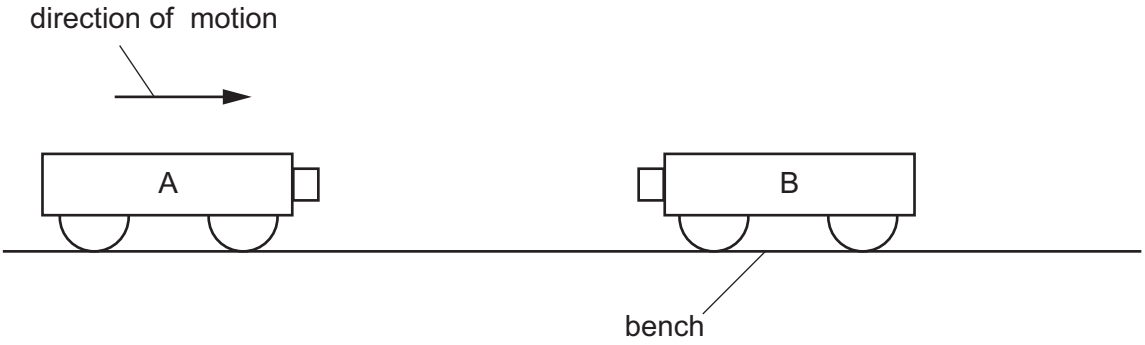

Fig. 2.1 (not drawn to scale)

(a) State the momentum of trolley B before the collision. Explain your answer.

statement .....

explanation .....

.....

[1]

(b) After the collision, the two trolleys are joined together and travel with a constant velocity $v = 0.18\,\text{m/s}$ to the right. The mass of trolley A is 0.75 kg.

Calculate the mass of trolley B.

mass of trolley B = ... [3]

DO NOT WRITE IN THIS MARGIN
DO NOT WRITE IN THIS MARGIN
DO NOT WRITE IN THIS MARGIN
DO NOT WRITE IN THIS MARGIN
DO NOT WRITE IN THIS MARGIN

GradeMax

(c) (i) The trolleys move onto a rough surface which exerts a constant force F on the trolleys and brings them to rest in 2.6 s.

Calculate F.

F = ... [2]

(ii) A different rough surface exerts a smaller resistive force on the trolleys. State how this affects the time taken to bring the trolleys to rest. Explain your answer.

statement .....

explanation .....

.....

[1]

[Total: 7]

DO NOT WRITE IN THIS MARGIN
DO NOT WRITE IN THIS MARGIN
DO NOT WRITE IN THIS MARGIN
DO NOT WRITE IN THIS MARGIN
DO NOT WRITE IN THIS MARGIN

GradeMax

3 Fig. 3.1 shows a mains electric heater used to heat a small room.

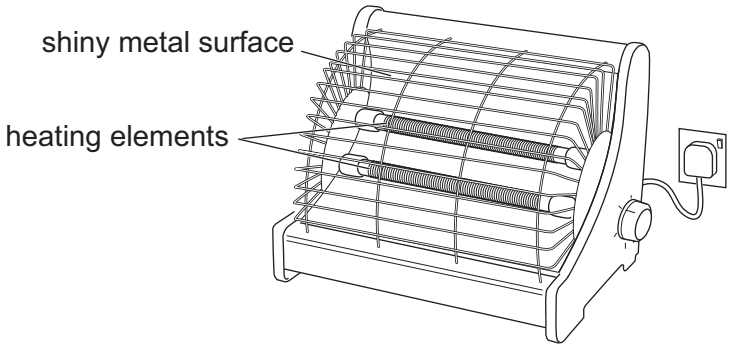

Fig. 3.1

(a) State the region of the electromagnetic spectrum which radiates thermal energy from the heater.

..... [1]

(b) Explain why the shiny metal surface behind the heating elements increases the thermal energy radiated into the room.

.....

.....

..... [2]

(c) The metal outer casing of the heater is earthed. State why this is an important safety feature.

.....

..... [1]

DO NOT WRITE IN THIS MARGIN
DO NOT WRITE IN THIS MARGIN
DO NOT WRITE IN THIS MARGIN
DO NOT WRITE IN THIS MARGIN
DO NOT WRITE IN THIS MARGIN

GradeMax

DO NOT WRITE IN THIS MARGIN
DO NOT WRITE IN THIS MARGIN
DO NOT WRITE IN THIS MARGIN
DO NOT WRITE IN THIS MARGIN
DO NOT WRITE IN THIS MARGIN

(d) The mains voltage is 230 V. The two identical heating elements are connected in parallel. Each heating element has a resistance of 89 Ω.

(i) Calculate the current in **one** heating element.

current = ... [2]

(ii) Show that the electrical power of the heater is approximately 1200 W. State any equation you use in words or symbols.

[2]

(iii) The heater is 95% efficient at converting electrical work done to thermal energy.

Calculate the thermal energy emitted by the heater in **(d)(ii)** in 60 s. Give your answer to **two** significant figures.

thermal energy = ... [3]

[Total: 11]

GradeMax

4 A train has a maximum speed of 200 km / h. It accelerates from rest with constant acceleration of 0.70 m / s^2.

(a) (i) Define acceleration.

.....

..... [1]

(ii) Show that the maximum speed of the train is approximately 56 m / s.

[2]

(iii) Calculate the time taken for the train to reach its maximum speed.

time = ... [2]

(b) (i) The train has a total mass of 440 000 kg. Calculate the force which causes the acceleration of the train.

force = ... [2]

(ii) The train travels into a headwind. The force of this headwind opposes the motion of the train. State and explain the effect of this force on the motion of the train.

statement .....

explanation .....

.....

[1]

[Total: 8]

DO NOT WRITE IN THIS MARGIN
DO NOT WRITE IN THIS MARGIN
DO NOT WRITE IN THIS MARGIN
DO NOT WRITE IN THIS MARGIN
DO NOT WRITE IN THIS MARGIN

GradeMax

DO NOT WRITE IN THIS MARGIN
DO NOT WRITE IN THIS MARGIN
DO NOT WRITE IN THIS MARGIN
DO NOT WRITE IN THIS MARGIN
DO NOT WRITE IN THIS MARGIN

5 A light-dependent resistor (LDR) has a low resistance in high light intensity and a high resistance in the dark.

(a) Sketch a graph of resistance (*y*-axis) against light intensity (*x*-axis) for an LDR.

[2]

(b) Fig. 5.1 shows part of the electric circuit used to turn on a light when it is dark.

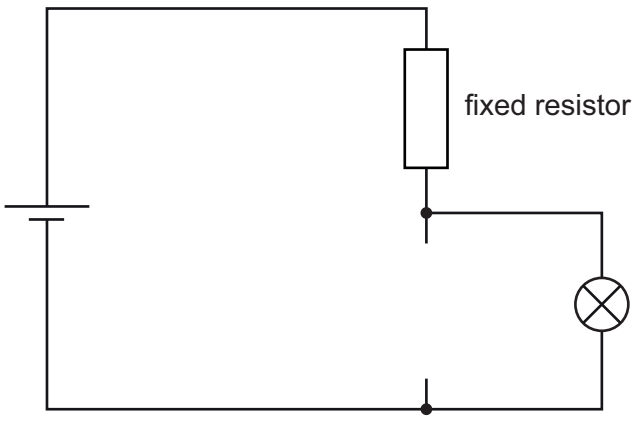

Fig. 5.1

(i) Complete the circuit in Fig. 5.1 with the symbol for a light-dependent resistor (LDR). [1]

(ii) Explain why the lamp is off in the light and the lamp is on in the dark. Use ideas about potential difference (p.d.) in your answer.

.....

.....

.....

..... [3]

[Total: 6]

GradeMax

6 Fig. 6.1 shows an object O which is 5.0 cm away from the centre of a thin, converging lens L. The focal length of L is 3.0 cm. Fig. 6.1 is drawn to full scale.

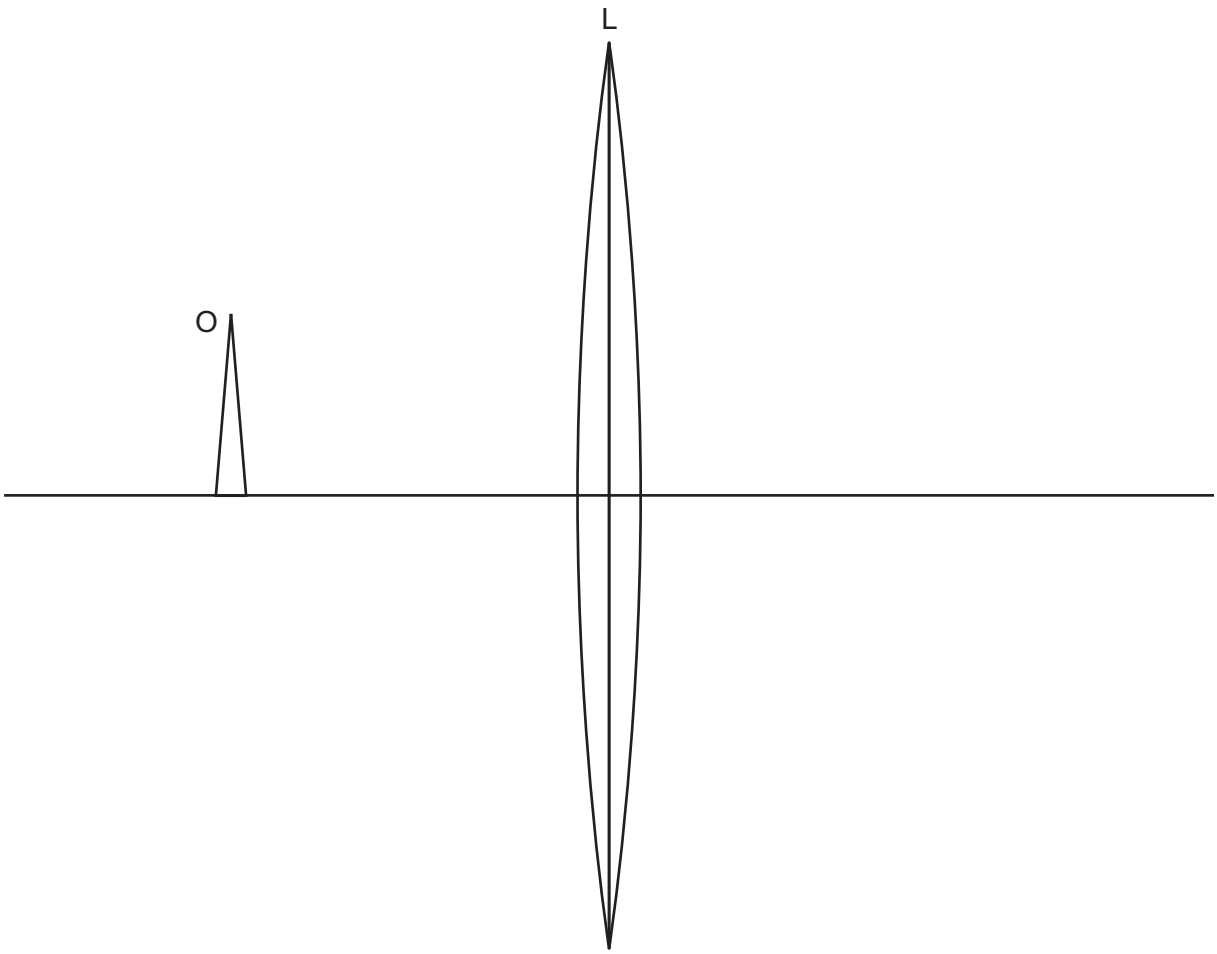

Fig. 6.1

(a) (i) On Fig. 6.1, label the principal axis with a P. [1]

(ii) On Fig. 6.1, place a letter X at a focal point. [1]

(iii) On Fig. 6.1, draw two rays from O to locate the tip of the image produced by the lens. [2]

DO NOT WRITE IN THIS MARGIN
DO NOT WRITE IN THIS MARGIN
DO NOT WRITE IN THIS MARGIN
DO NOT WRITE IN THIS MARGIN
DO NOT WRITE IN THIS MARGIN

GradeMax

(iv) In Table 6.1, place a tick in the right-hand column next to **all** the terms that describe the image in **(a)(iii)**.

Table 6.1

diminished	
enlarged	
inverted	
real	
same size	
upright	
virtual	

[3]

(b) The object moves closer to L. The new distance between L and the object is less than the focal length of L.

Describe how the new image is different from the image in **(a)(iv)**.

.....

.....

..... [2]

[Total: 9]

DO NOT WRITE IN THIS MARGIN
DO NOT WRITE IN THIS MARGIN
DO NOT WRITE IN THIS MARGIN
DO NOT WRITE IN THIS MARGIN
DO NOT WRITE IN THIS MARGIN

GradeMax

7 **(a)** Fig. 7.1 is a scale drawing of light waves approaching a narrow slit.

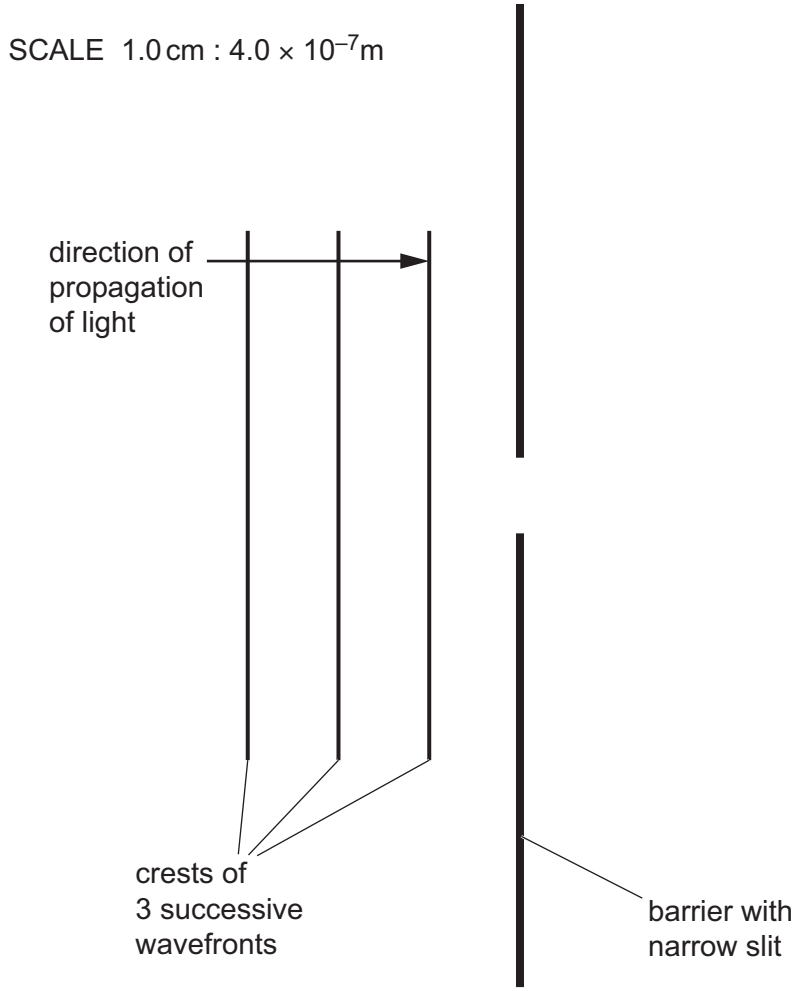

Fig. 7.1

(i) Name the wave effect produced by the narrow slit.

..... [1]

(ii) Using Fig. 7.1, determine the wavelength of the light. Give your answer to **two** significant figures.

wavelength = ... [2]

(iii) On Fig. 7.1, draw **three** wavefronts that have passed through the narrow slit. [3]

DO NOT WRITE IN THIS MARGIN
DO NOT WRITE IN THIS MARGIN
DO NOT WRITE IN THIS MARGIN
DO NOT WRITE IN THIS MARGIN
DO NOT WRITE IN THIS MARGIN

GradeMax

(b) A foghorn emits a sound with frequency 380 Hz. The sound is heard by a ship 2.5 km away from the foghorn. The speed of sound in air is 330 m / s.

(i) Show that the wavelength of the sound is approximately 0.9 m.
State any equation you use in words or symbols.

[2]

(ii) Calculate the time it takes for sound to travel to the ship from the foghorn.

time = ... [2]

[Total: 10]

DO NOT WRITE IN THIS MARGIN
DO NOT WRITE IN THIS MARGIN
DO NOT WRITE IN THIS MARGIN
DO NOT WRITE IN THIS MARGIN
DO NOT WRITE IN THIS MARGIN

GradeMax

8 Fig. 8.1 shows a metal rod suspended in the magnetic field produced by a pair of permanent magnets. The metal rod is connected to a cell and there is a current in the metal rod.

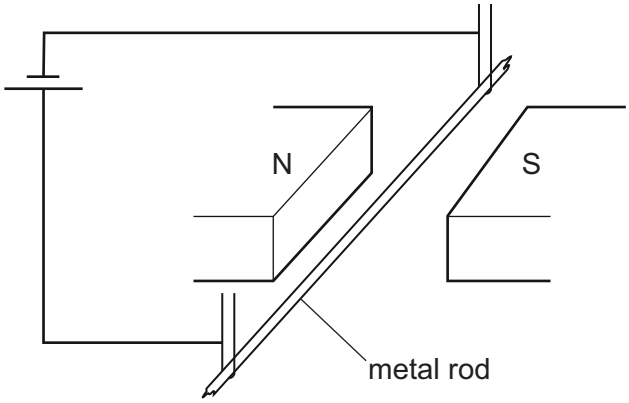

Fig. 8.1

(a) State the direction of the force on the metal rod due to the current.

Explain your answer.

direction of force .....

explanation .....

.....

.....

[3]

(b) The connections to the cell are reversed.

State how this change affects the force on the metal rod.

..... [1]

DO NOT WRITE IN THIS MARGIN
DO NOT WRITE IN THIS MARGIN
DO NOT WRITE IN THIS MARGIN
DO NOT WRITE IN THIS MARGIN
DO NOT WRITE IN THIS MARGIN

GradeMax

(c) Two magnets and a cell are used to make a simple electric motor as shown in Fig. 8.2.

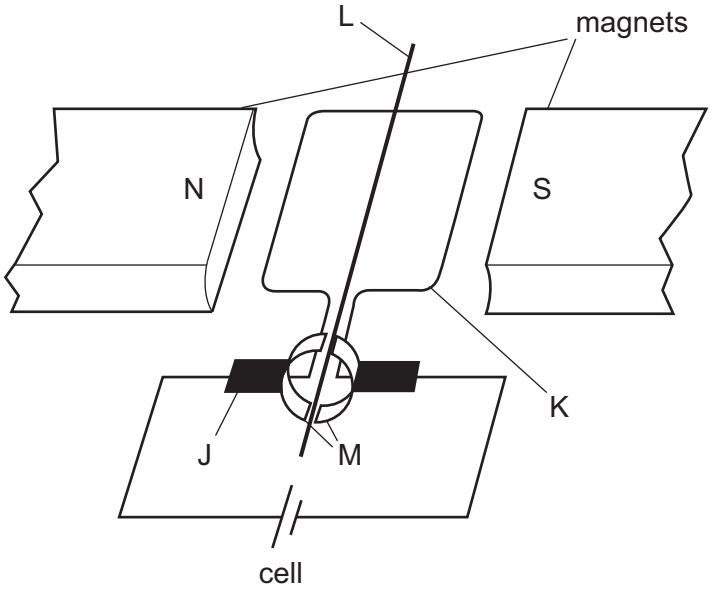

Fig. 8.2

Describe the function of parts J, K, L and M.

J .....

.....

K .....

.....

L .....

.....

M .....

.....

[4]

[Total: 8]

DO NOT WRITE IN THIS MARGIN
DO NOT WRITE IN THIS MARGIN
DO NOT WRITE IN THIS MARGIN
DO NOT WRITE IN THIS MARGIN
DO NOT WRITE IN THIS MARGIN

GradeMax

9 Strontium-90 is a radioactive isotope of strontium. The nuclide notation for strontium-90 is:

$$^{90}_{38}Sr$$

(a) (i) Explain what isotopes are.

.....

..... [1]

(ii) Complete Table 9.1 for strontium-90.

Table 9.1

particle	number in one atom	location
	38	outside nucleus
neutron		
	38	inside nucleus

[2]

DO NOT WRITE IN THIS MARGIN
DO NOT WRITE IN THIS MARGIN
DO NOT WRITE IN THIS MARGIN
DO NOT WRITE IN THIS MARGIN
DO NOT WRITE IN THIS MARGIN

GradeMax

DO NOT WRITE IN THIS MARGIN
DO NOT WRITE IN THIS MARGIN
DO NOT WRITE IN THIS MARGIN
DO NOT WRITE IN THIS MARGIN
DO NOT WRITE IN THIS MARGIN

(b) Strontium-90 is used to measure the thickness of metal sheets in industry.
Strontium-90 decays by emitting beta (β) particles which pass through a metal sheet to a detector.

(i) One metal sheet is 0.75 mm thick. Suggest why strontium-90 is a suitable radioactive source to measure the thickness of the metal sheets.

.....

.....

..... [2]

(ii) The half-life of strontium-90 is approximately 27 years. Fig. 9.1 shows the shape of a decay curve.

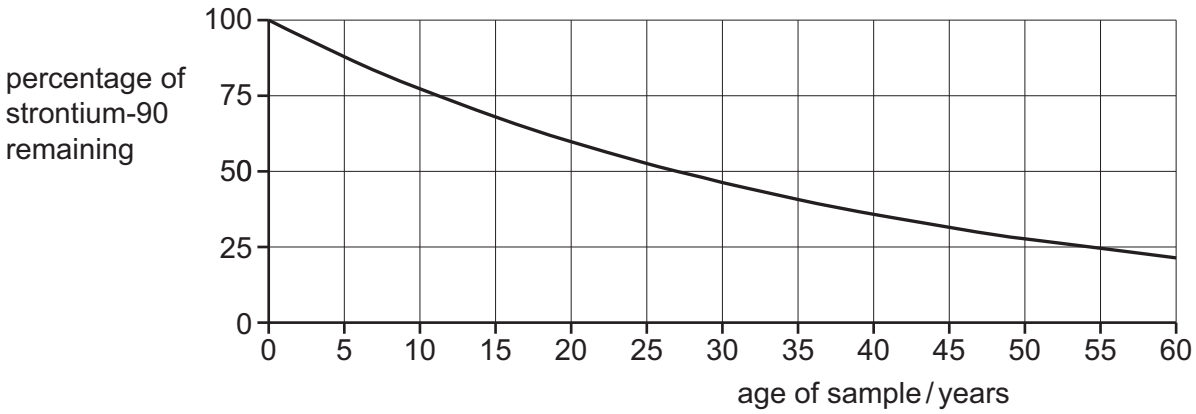

Fig. 9.1

The strontium-90 source is replaced with a new source after 15 years. Using Fig. 9.1, suggest why a strontium-90 source that is more than 15 years old needs to be replaced with a new source.

.....

..... [2]

[Total: 7]

GradeMax

10 Fig. 10.1 shows the path of the Earth as it orbits the Sun. X is a position on the Earth where scientists observe the apparent motion of the Sun throughout the year.

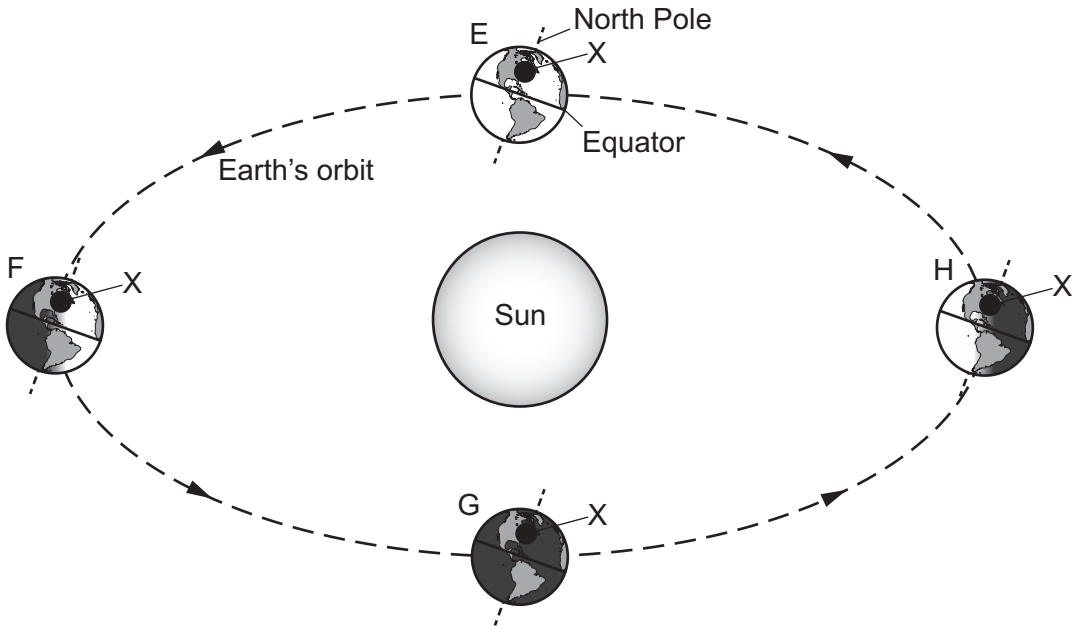

Fig. 10.1

(a) Determine how many days it takes the Earth to move around its orbit from F to G. Explain your answer.

number of days = ...

explanation .....

.....

[2]

(b) Fig. 10.1 shows four positions E, F, G and H of the Earth in its orbit of the Sun.

(i) Identify the position of the Earth when it is summer at X. ..... [1]

(ii) Identify the position of the Earth when it is winter at X. ..... [1]

DO NOT WRITE IN THIS MARGIN
DO NOT WRITE IN THIS MARGIN
DO NOT WRITE IN THIS MARGIN
DO NOT WRITE IN THIS MARGIN
DO NOT WRITE IN THIS MARGIN

* 0000800000019 *

DO NOT WRITE IN THIS MARGIN
DO NOT WRITE IN THIS MARGIN
DO NOT WRITE IN THIS MARGIN
DO NOT WRITE IN THIS MARGIN
DO NOT WRITE IN THIS MARGIN

(c) The orbital speed of the Earth around the Sun is approximately 3.0×10^4 m/s.

Calculate the average radius of the Earth's orbit.

radius = ... [3]

(d) Earth is a planet in the Solar System. State **one other** type of naturally occurring object that is present in the Solar System.

..... [1]

[Total: 8]

GradeMax

BLANK PAGE

DO NOT WRITE IN THIS MARGIN
DO NOT WRITE IN THIS MARGIN
DO NOT WRITE IN THIS MARGIN
DO NOT WRITE IN THIS MARGIN
DO NOT WRITE IN THIS MARGIN

Permission to reproduce items where third-party owned material protected by copyright is included has been sought and cleared where possible. Every reasonable effort has been made by the publisher (UCLES) to trace copyright holders, but if any items requiring clearance have unwittingly been included, the publisher will be pleased to make amends at the earliest possible opportunity.

To avoid the issue of disclosure of answer-related information to candidates, all copyright acknowledgements are reproduced online in the Cambridge Assessment International Education Copyright Acknowledgements Booklet. This is produced for each series of examinations and is freely available to download at www.cambridgeinternational.org after the live examination series.

Cambridge Assessment International Education is part of Cambridge Assessment. Cambridge Assessment is the brand name of the University of Cambridge Local Examinations Syndicate (UCLES), which is a department of the University of Cambridge.

© UCLES 2025