GradeMax

* 0000800000001 *

Cambridge Assessment International Education

Cambridge IGCSE™

CANDIDATE NAME

CENTRE NUMBER

CANDIDATE NUMBER

* 0 3 9 5 2 1 4 3 3 5 *

PHYSICS **0625/52**

Paper 5 Practical Test **February/March 2025**

1 hour 15 minutes

You must answer on the question paper.

You will need: The materials and apparatus listed in the confidential instructions

INSTRUCTIONS

- Answer **all** questions.
- Use a black or dark blue pen. You may use an HB pencil for any diagrams or graphs.
- Write your name, centre number and candidate number in the boxes at the top of the page.
- Write your answer to each question in the space provided.
- Do **not** use an erasable pen or correction fluid.
- Do **not** write on any bar codes.
- You may use a calculator.
- You should show all your working and use appropriate units.

INFORMATION

- The total mark for this paper is 40.
- The number of marks for each question or part question is shown in brackets [ ].

For Examiner's Use	
1	
2	
3	
4	
Total	

This document has **12** pages.

DC (PB/CT) 345552/2
© UCLES 2025

[Turn over

GradeMax

1 In this experiment, you will investigate the behaviour of a spring and use it to determine the mass of an object.

A stand and spring have been set up for you.

Refer to Fig. 1.1.

(a) Suspend a mass m = 100 g from the spring as shown in Fig. 1.1.

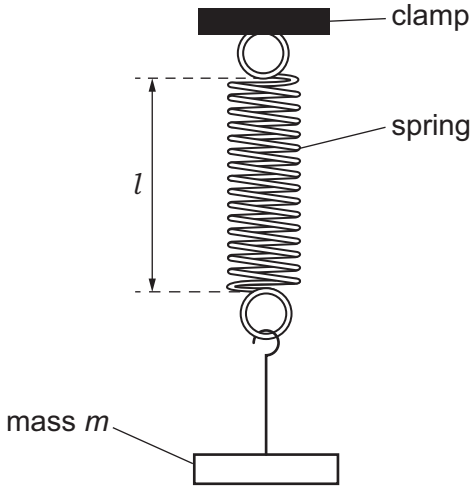

Fig. 1.1

Measure, and record in Table 1.1, the stretched length l of the spring, as indicated in Fig. 1.1.

Repeat this step for values of m = 200 g, m = 300 g, m = 400 g and m = 500 g.

Remove the mass m from the spring.

Table 1.1

m / g	l / cm
100	
200	
300	
400	
500	

[2]

DO NOT WRITE IN THIS MARGIN
DO NOT WRITE IN THIS MARGIN
DO NOT WRITE IN THIS MARGIN
DO NOT WRITE IN THIS MARGIN
DO NOT WRITE IN THIS MARGIN

(b) Describe a technique you used when measuring the length of the spring, to ensure an accurate reading. You may draw a diagram.

.....

.....

..... [1]

(c) Plot a graph of l/cm (y-axis) against m/g (x-axis).
Start the axes from the origin (0, 0).

Draw a best-fit straight line. The line might not go through the origin.

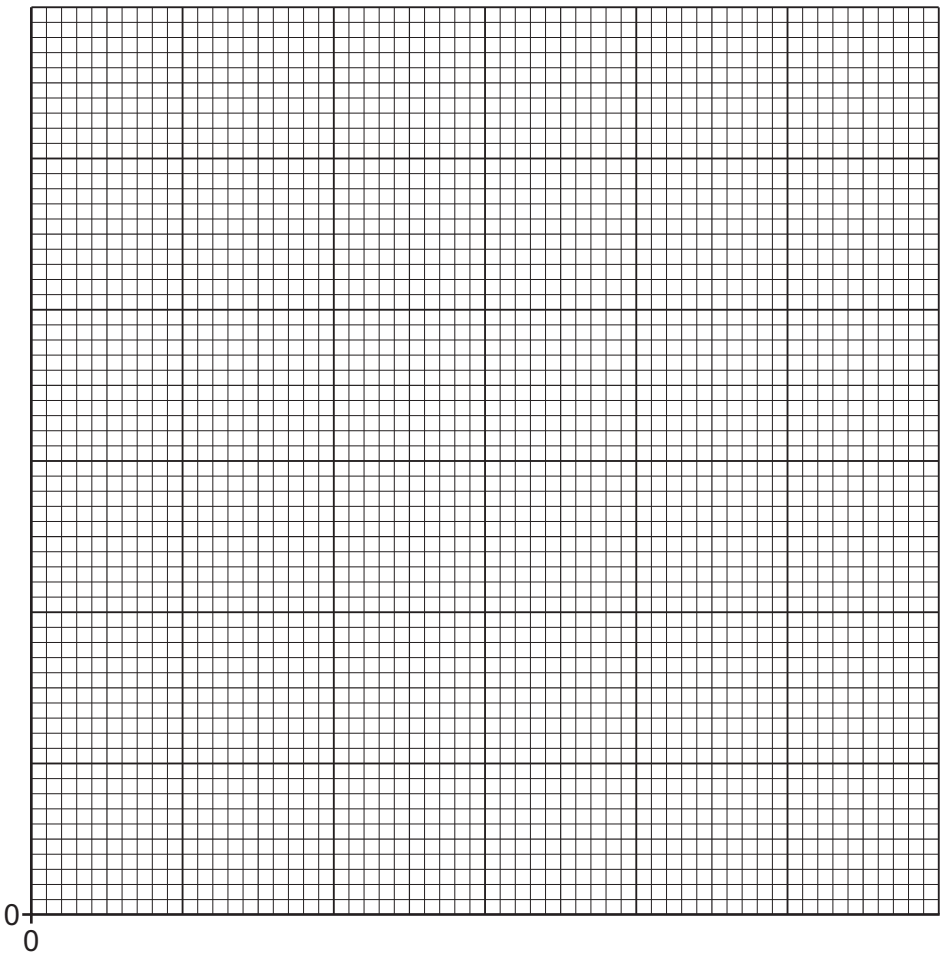

[4]

(d) Use the graph to determine the length l_0 of the spring with no load on it.

l_0 = ... cm [1]

DO NOT WRITE IN THIS MARGIN
DO NOT WRITE IN THIS MARGIN
DO NOT WRITE IN THIS MARGIN
DO NOT WRITE IN THIS MARGIN
DO NOT WRITE IN THIS MARGIN

GradeMax

(e) Suspend object **X** from the spring and measure the stretched length l_X of the spring.

l_X = ... cm

Use the graph and your value of l_X, to determine the mass m_X of object **X**.
Show clearly on the graph how you obtained your answer.

m_X = ... g
[2]

(f) Two students measure the mass of another object using the same method and apparatus.
One student records the mass as 132.6 g. The other student records the mass as 130 g.

State and explain which answer has the more suitable number of significant figures for this experiment.

statement .....

explanation .....

.....
[1]

[Total: 11]

DO NOT WRITE IN THIS MARGIN
DO NOT WRITE IN THIS MARGIN
DO NOT WRITE IN THIS MARGIN
DO NOT WRITE IN THIS MARGIN
DO NOT WRITE IN THIS MARGIN

GradeMax

2 In this experiment, you will investigate the effect of insulation on the cooling of water.

Refer to Fig. 2.1.

Beaker A is covered with material that is a thermal insulator.

Beaker B is identical to beaker A but has no insulation.

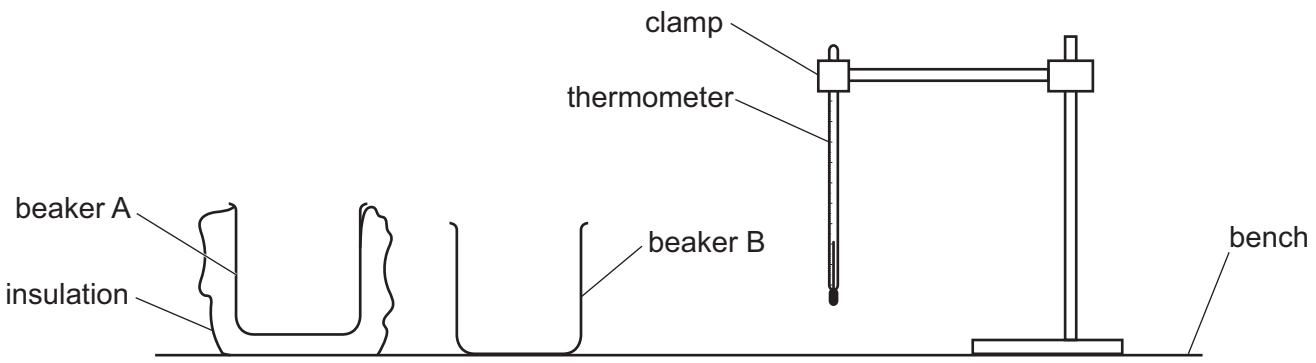

Fig. 2.1

(a)
- Pour 200 cm^3 of hot water into beaker A.
- Place the thermometer in the water.
- In the first row of Table 2.1, record the temperature θ of the water at time t = 0 and immediately start the stop-watch.
- Record, in Table 2.1, the temperature θ of the water at times t = 30 s, t = 60 s, t = 90 s, t = 120 s, t = 150 s and t = 180 s.

[1]

Remove the thermometer from the beaker.

(b) Repeat the procedure in **(a)** for beaker B. [2]

Table 2.1

	beaker A with insulation	beaker B without insulation
t / s	θ / °C	θ / °C
0		
30		
60		
90		
120		
150		
180		

DO NOT WRITE IN THIS MARGIN
DO NOT WRITE IN THIS MARGIN
DO NOT WRITE IN THIS MARGIN
DO NOT WRITE IN THIS MARGIN
DO NOT WRITE IN THIS MARGIN

GradeMax

(c) Write a conclusion stating whether the insulation affects the rate of cooling of the water. Justify your answer by referring to values from your results.

.....

.....

.....

..... [2]

(d) **(i)** Calculate the average cooling rate x_1 during the first half of the experiment for the water in beaker B. Use your readings for beaker B from Table 2.1 and the equation:

$$x_1 = \frac{\theta_0 - \theta_{90}}{T},$$

where T = 90 s and θ_0 and θ_{90} are the temperatures of the water in beaker B at times t = 0 and t = 90 s.

Include the unit.

x_1 = ... [1]

(ii) Calculate the average cooling rate x_2 during the second half of the experiment for the water in beaker B. Use your readings for beaker B from Table 2.1 and the equation:

$$x_2 = \frac{\theta_{90} - \theta_{180}}{T}$$

where T = 90 s and θ_{90} and θ_{180} are the temperatures of the water in beaker B at times t = 90 s and t = 180 s.

Include the unit.

x_2 = ... [1]

(e) A student suggests that, for this type of experiment, the temperature of the water in each beaker at time t = 0 must be the same for the comparison to be fair.

Use your answers from **(d)(i)** and **(d)(ii)** to explain whether this is necessary.

.....

.....

..... [2]

DO NOT WRITE IN THIS MARGIN
DO NOT WRITE IN THIS MARGIN
DO NOT WRITE IN THIS MARGIN
DO NOT WRITE IN THIS MARGIN
DO NOT WRITE IN THIS MARGIN

GradeMax

(f) **(i)** A student wants to eliminate, from the comparison, any thermal energy lost from the surface of the water.

Suggest a change to the equipment which will do that.

You are **not** required to carry out this additional experiment.

.....

..... [1]

(ii) Suggest what effect this change will have on the cooling rates of the water in beaker A and beaker B.

.....

..... [1]

[Total: 11]

DO NOT WRITE IN THIS MARGIN
DO NOT WRITE IN THIS MARGIN
DO NOT WRITE IN THIS MARGIN
DO NOT WRITE IN THIS MARGIN
DO NOT WRITE IN THIS MARGIN

GradeMax

3 In this experiment, you will investigate the refraction of light by a transparent block.

Use the separate ray-trace sheet provided.
You may refer to Fig. 3.1 for guidance.

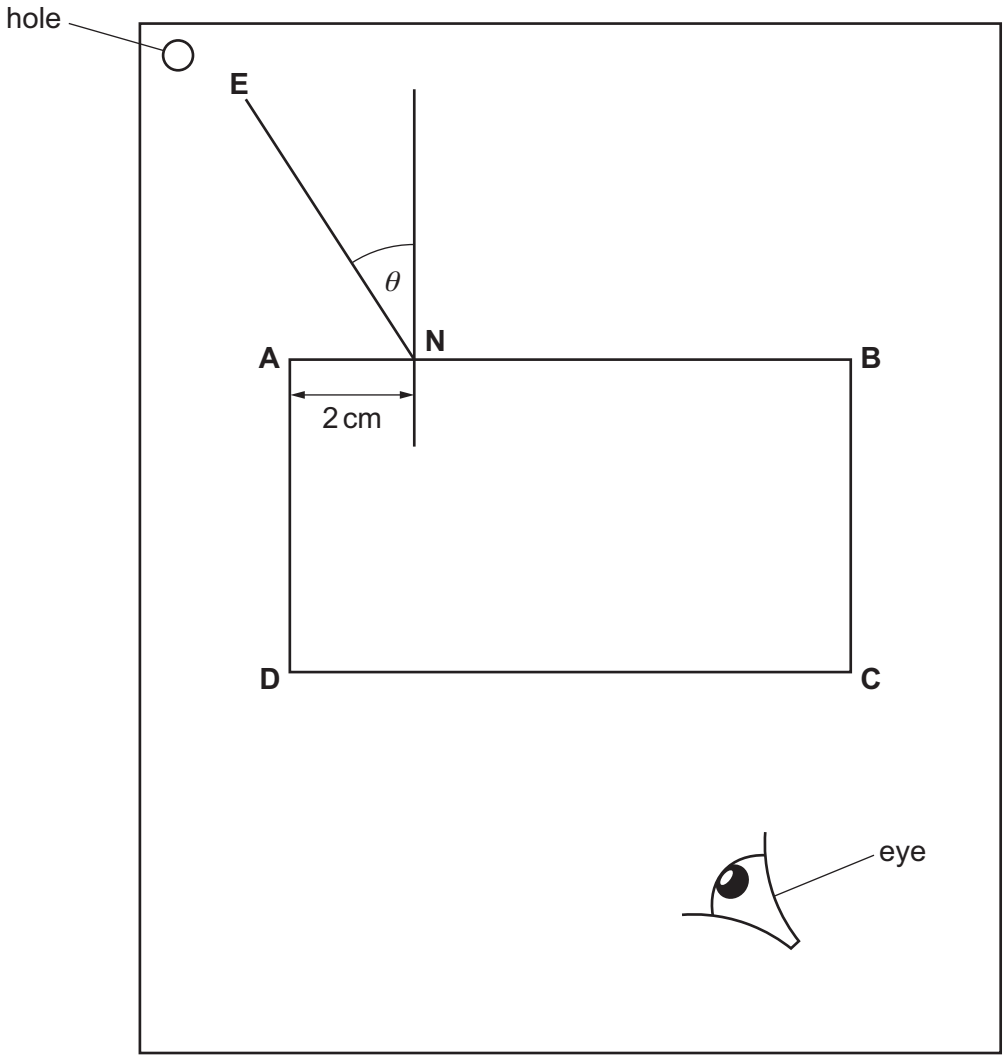

Fig. 3.1

(a) Place the transparent block approximately in the centre of the ray-trace sheet.
Carefully draw round the block and label the corners **A**, **B**, **C** and **D** as indicated by Fig. 3.1.
Remove the block from the ray-trace sheet.

Draw a normal to line **AB** at a point **N**, 2 cm from **A**.

Draw a line **EN**, as indicated by Fig. 3.1, 8 cm long and at an angle $\theta = 40°$ to the normal.

[2]

DO NOT WRITE IN THIS MARGIN
DO NOT WRITE IN THIS MARGIN
DO NOT WRITE IN THIS MARGIN
DO NOT WRITE IN THIS MARGIN
DO NOT WRITE IN THIS MARGIN

GradeMax

(b) Replace the block in exactly the same position as in **(a)**.

Place two pins P_1 and P_2 on line **EN**, a suitable distance apart for accurate ray tracing.
Mark with crosses and label the positions of P_1 and P_2.

View the images of P_1 and P_2 through the block, from the direction indicated by the eye in Fig. 3.1. Place two pins P_3 and P_4 so that pins P_3 and P_4 and the images of P_1 and P_2 all appear exactly one behind the other.
Mark with crosses and label the positions of P_3 and P_4.

Remove the block and pins from the ray-trace sheet.

Draw a line through P_3 and P_4. Extend this line to meet line **CD**.
Label the point at which this line meets **CD** with the letter **F**. Label the lower end of this line with the letter **G**.

Extend line **EN** to approximately 5 cm below line **CD**.
Label the point at which this line crosses **CD** with the letter **H**. Label the lower end of this line with the letter **J**.

[2]

(c) **(i)** Measure the acute angle α between lines **CD** and **GF**.
An acute angle is an angle less than 90°.

α = ...°

Measure the acute angle β between lines **CD** and **JH**.

β = ...°

[1]

(ii) A student suggests that angle α should be equal to angle β.

State whether your results support this suggestion. Justify your answer by reference to values from your results.

statement .....

justification .....

.....

[2]

(d) Draw a new line **EN**, as indicated by Fig. 3.1, 8 cm long and at an angle θ = 20° to the normal.

Repeat the steps in **(b)**.

[2]

DO NOT WRITE IN THIS MARGIN
DO NOT WRITE IN THIS MARGIN
DO NOT WRITE IN THIS MARGIN
DO NOT WRITE IN THIS MARGIN
DO NOT WRITE IN THIS MARGIN

GradeMax

(e) Describe **one** technique to use in this type of experiment to ensure accurate results.

.....

..... [1]

(f) Suggest **one** reason why different students, all doing this experiment carefully, may not obtain identical results.

.....

..... [1]

[Total: 11]

Write your name, centre number and candidate number on your ray-trace sheet.
Tie your ray-trace sheet into this booklet between pages 8 and 9.

DO NOT WRITE IN THIS MARGIN
DO NOT WRITE IN THIS MARGIN
DO NOT WRITE IN THIS MARGIN
DO NOT WRITE IN THIS MARGIN
DO NOT WRITE IN THIS MARGIN

GradeMax

DO NOT WRITE IN THIS MARGIN
DO NOT WRITE IN THIS MARGIN
DO NOT WRITE IN THIS MARGIN
DO NOT WRITE IN THIS MARGIN
DO NOT WRITE IN THIS MARGIN

4 A student investigates the resistance of a wire.

Plan an experiment which enables the student to investigate how the length of a wire affects the resistance of the wire.

Resistance R is calculated from the equation: $R = \frac{V}{I}$

where V is the potential difference (p.d.) across the wire and I is the current in the wire.

You are **not** required to do the experiment.

The apparatus available includes:

- a selection of wires
- a variable power supply
- an ammeter
- a voltmeter.

In your plan:

- list any additional apparatus needed
- complete Fig. 4.1 to show a voltmeter connected to measure the potential difference across the wire
- explain briefly how to do the experiment, including the measurements to take so that the resistance can be determined
- state the key variables to keep constant
- draw a table, or tables, with column headings, to show how to display the readings (you are **not** required to enter any readings in the table)
- explain how to use the readings to reach a conclusion.

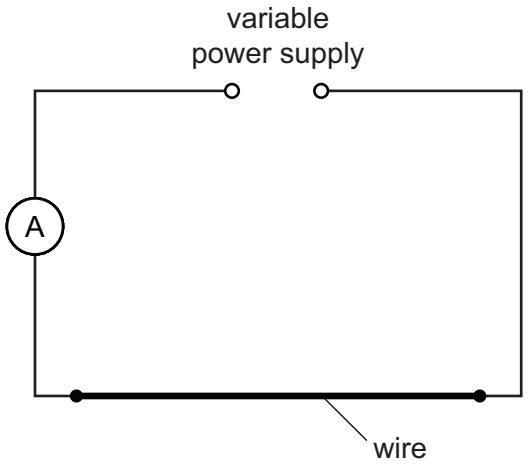

Fig. 4.1

GradeMax

.....

.....

.....

.....

.....

.....

.....

.....

.....

.....

.....

.....

.....

.....

.....

.....

.....

.....

.....

.....

..... [7]

DO NOT WRITE IN THIS MARGIN

DO NOT WRITE IN THIS MARGIN

DO NOT WRITE IN THIS MARGIN

DO NOT WRITE IN THIS MARGIN

DO NOT WRITE IN THIS MARGIN

Permission to reproduce items where third-party owned material protected by copyright is included has been sought and cleared where possible. Every reasonable effort has been made by the publisher (UCLES) to trace copyright holders, but if any items requiring clearance have unwittingly been included, the publisher will be pleased to make amends at the earliest possible opportunity.

To avoid the issue of disclosure of answer-related information to candidates, all copyright acknowledgements are reproduced online in the Cambridge Assessment International Education Copyright Acknowledgements Booklet. This is produced for each series of examinations and is freely available to download at www.cambridgeinternational.org after the live examination series.

Cambridge Assessment International Education is part of Cambridge Assessment. Cambridge Assessment is the brand name of the University of Cambridge Local Examinations Syndicate (UCLES), which is a department of the University of Cambridge.