GradeMax

* 0000800000001 *

Cambridge Assessment International Education

Cambridge IGCSE™

CANDIDATE NAME

CENTRE NUMBER | | | | | |

CANDIDATE NUMBER | | | | |

* 6 5 3 7 5 5 6 5 8 9 *

PHYSICS **0625/62**

Paper 6 Alternative to Practical **February/March 2025**

1 hour

You must answer on the question paper.

No additional materials are needed.

INSTRUCTIONS

- Answer **all** questions.
- Use a black or dark blue pen. You may use an HB pencil for any diagrams or graphs.
- Write your name, centre number and candidate number in the boxes at the top of the page.
- Write your answer to each question in the space provided.
- Do **not** use an erasable pen or correction fluid.
- Do **not** write on any bar codes.
- You may use a calculator.
- You should show all your working and use appropriate units.

INFORMATION

- The total mark for this paper is 40.
- The number of marks for each question or part question is shown in brackets [ ].

This document has **16** pages. Any blank pages are indicated.

DC (PB/CT) 345553/2
© UCLES 2025

[Turn over

GradeMax

1 A student investigates the behaviour of a spring, and then uses the spring to determine the mass of an object.

The apparatus is shown in Fig. 1.1.

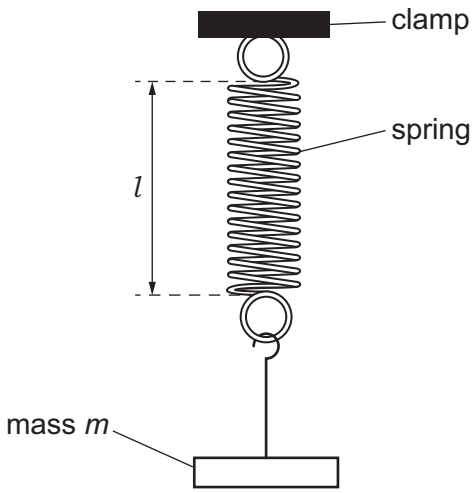

Fig. 1.1

(a) The student suspends a mass m = 100 g from the spring.
She measures, and records in Table 1.1, the stretched length l of the spring, as indicated in Fig. 1.1.

Describe **two** techniques for measuring the length of the spring, to ensure an accurate reading. You may draw a diagram.

1 .....

.....

2 .....

.....

[2]

DO NOT WRITE IN THIS MARGIN
DO NOT WRITE IN THIS MARGIN
DO NOT WRITE IN THIS MARGIN
DO NOT WRITE IN THIS MARGIN
DO NOT WRITE IN THIS MARGIN

(b) She repeats step **(a)** for values of m = 200 g, m = 300 g, m = 400 g and m = 500 g.
Her readings are shown in Table 1.1.

Table 1.1

m / g	l / cm
100	6.0
200	9.2
300	13.6
400	16.8
500	21.0

Plot a graph of l / cm (y-axis) against m / g (x-axis).
Start the axes from the origin (0, 0).

Draw a best-fit straight line. The line might not go through the origin.

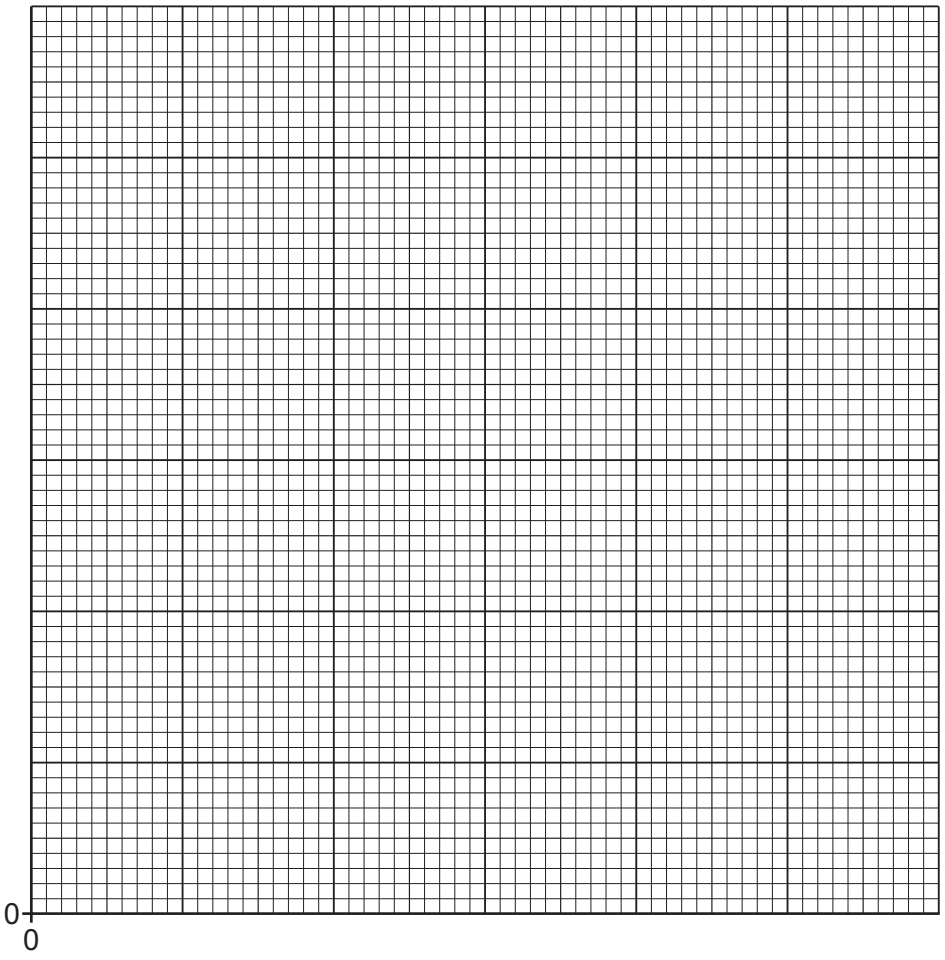

[4]

(c) Use your graph to determine the length l_0 of the spring with no load on it.

l_0 = ... cm [1]

DO NOT WRITE IN THIS MARGIN
DO NOT WRITE IN THIS MARGIN
DO NOT WRITE IN THIS MARGIN
DO NOT WRITE IN THIS MARGIN
DO NOT WRITE IN THIS MARGIN

GradeMax

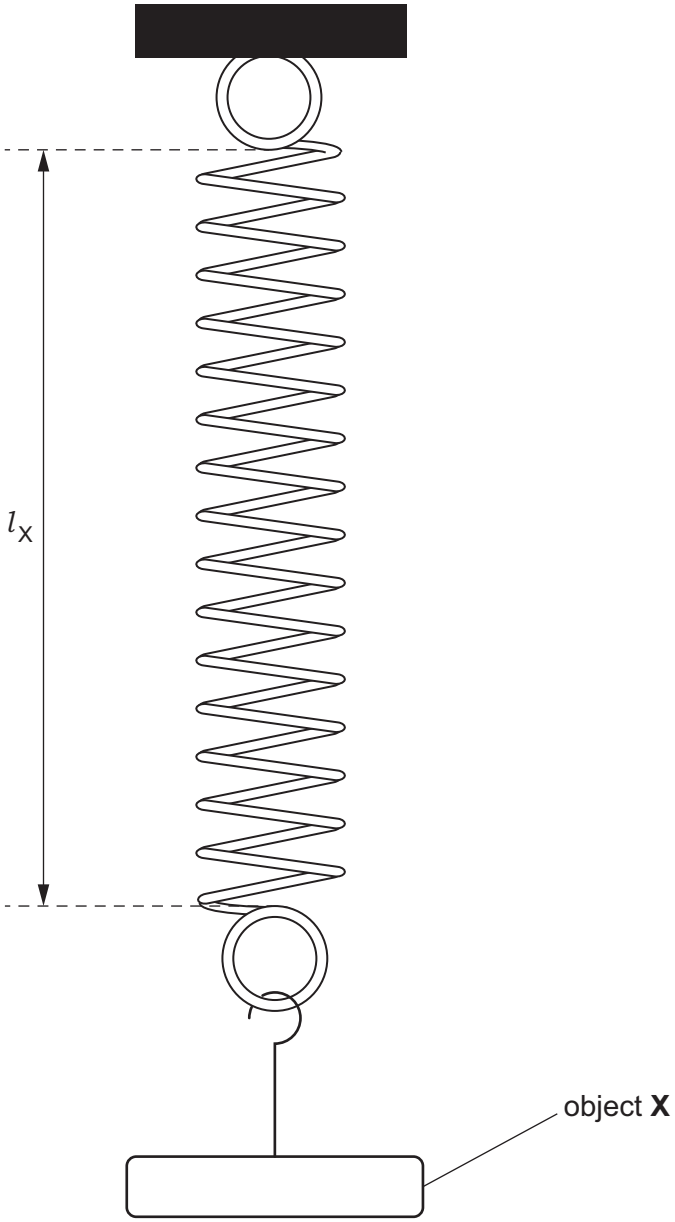

Fig. 1.2

(d) An object **X** is suspended from the spring.

(i) On Fig. 1.2, measure the stretched length l_X of the spring.

l_X = ... [1]

(ii) Use the graph and your reading from **(d)(i)**, to determine the mass m_X of object **X**. Show clearly on the graph how you obtained your answer.

m_X = ...g [2]

DO NOT WRITE IN THIS MARGIN
DO NOT WRITE IN THIS MARGIN
DO NOT WRITE IN THIS MARGIN
DO NOT WRITE IN THIS MARGIN
DO NOT WRITE IN THIS MARGIN

GradeMax

(e) Two students measure the mass of another object using the same method and apparatus. One student records the mass as 132.6 g. The other student records the mass as 130 g.

State and explain which answer has the more suitable number of significant figures for this experiment.

statement .....

explanation .....

.....

[1]

[Total: 11]

DO NOT WRITE IN THIS MARGIN
DO NOT WRITE IN THIS MARGIN
DO NOT WRITE IN THIS MARGIN
DO NOT WRITE IN THIS MARGIN
DO NOT WRITE IN THIS MARGIN

GradeMax

2 A student investigates the effect of insulation on the cooling of water.

He uses the apparatus shown in Fig. 2.1.

Beaker A is covered with material that is a thermal insulator.

Beaker B is identical to beaker A but has no insulation.

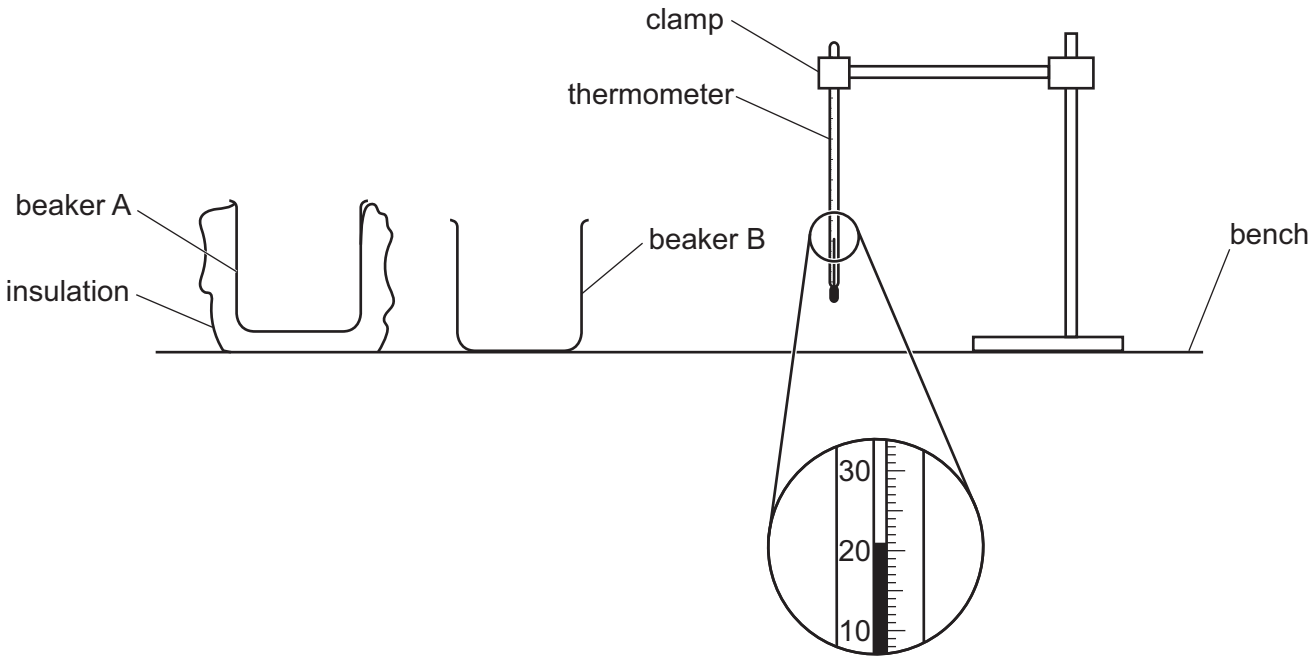

Fig. 2.1

(a) (i) Record room temperature θ_R shown on the thermometer in Fig. 2.1.

θ_R = ... [1]

(ii) Describe **one** technique used to ensure that the room temperature reading is as accurate as possible.

.....

..... [1]

DO NOT WRITE IN THIS MARGIN
DO NOT WRITE IN THIS MARGIN
DO NOT WRITE IN THIS MARGIN
DO NOT WRITE IN THIS MARGIN
DO NOT WRITE IN THIS MARGIN

GradeMax

DO NOT WRITE IN THIS MARGIN
DO NOT WRITE IN THIS MARGIN
DO NOT WRITE IN THIS MARGIN
DO NOT WRITE IN THIS MARGIN
DO NOT WRITE IN THIS MARGIN

(b) The student pours 200 cm^3 of hot water into beaker A and records the temperature θ at time $t = 0$.

He records, in Table 2.1, the temperature of the water in the beaker every 30 s.

The student repeats the procedure for beaker B.

It is important that the temperatures are recorded at exactly every 30 s.

Describe a technique which will make it easier for the student to do that.

.....

.....

..... [1]

Table 2.1

	beaker A with insulation	beaker B without insulation
t / s	θ / °C	θ / °C
0	92.5	93.0
30	90.5	90.5
60	89.0	88.5
90	87.5	87.0
120	86.0	85.5
150	85.0	84.0
180	85.5	83.0

(c) Write a conclusion stating whether the insulation affects the rate of cooling of the water. Justify your answer by referring to values from the results.

.....

.....

.....

..... [2]

GradeMax

(d) (i) Calculate the average cooling rate x_1 during the first half of the experiment for the water in beaker B. Use the readings for beaker B from Table 2.1 and the equation:

$$x_1 = \frac{\theta_0 - \theta_{90}}{T},$$

where T = 90 s and θ_0 and θ_{90} are the temperatures of the water in beaker B at times t = 0 and t = 90 s.

Include the unit.

x_1 = ... [1]

(ii) Calculate the average cooling rate x_2 during the second half of the experiment for the water in beaker B. Use the readings for beaker B from Table 2.1 and the equation:

$$x_2 = \frac{\theta_{90} - \theta_{180}}{T},$$

where T = 90 s and θ_{90} and θ_{180} are the temperatures of the water in beaker B at t = 90 s and t = 180 s.

Include the unit.

x_2 = ... [1]

(e) A student suggests that, for this type of experiment, the temperature of the water in each beaker at time t = 0 must be the same for the comparison to be fair.

Use your answers from **(d)(i)** and **(d)(ii)** to explain whether this is necessary.

.....

.....

..... [2]

DO NOT WRITE IN THIS MARGIN
DO NOT WRITE IN THIS MARGIN
DO NOT WRITE IN THIS MARGIN
DO NOT WRITE IN THIS MARGIN
DO NOT WRITE IN THIS MARGIN

GradeMax

(f) **(i)** A student wants to eliminate, from the comparison, any thermal energy lost from the surface of the water.

Suggest a change to the equipment which will do that.

.....

..... [1]

(ii) Suggest what effect this change will have on the cooling rates of the water in beaker A and beaker B.

.....

..... [1]

[Total: 11]

DO NOT WRITE IN THIS MARGIN
DO NOT WRITE IN THIS MARGIN
DO NOT WRITE IN THIS MARGIN
DO NOT WRITE IN THIS MARGIN
DO NOT WRITE IN THIS MARGIN

GradeMax

3 A student investigates the refraction of light by a transparent block.

The student's ray-trace sheet is shown full-size in Fig. 3.1.

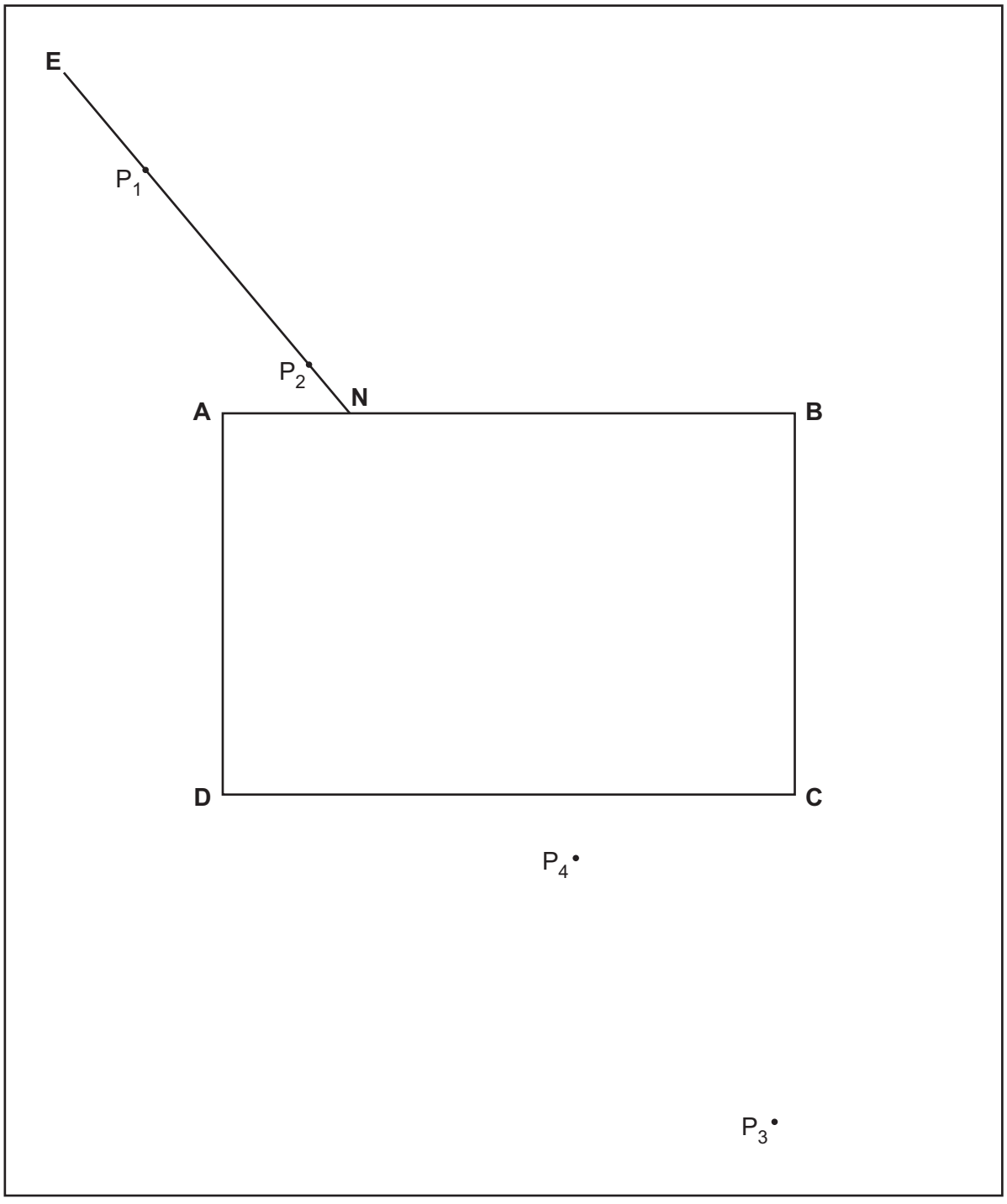

Fig. 3.1

(a) The student places a transparent block **ABCD** near the centre of the ray-trace sheet as indicated in Fig. 3.1.

(i) Draw a normal to point **N**, extending above **AB**. Label the upper end of the normal with the letter **L**. [1]

DO NOT WRITE IN THIS MARGIN
DO NOT WRITE IN THIS MARGIN
DO NOT WRITE IN THIS MARGIN
DO NOT WRITE IN THIS MARGIN
DO NOT WRITE IN THIS MARGIN

GradeMax

(ii) The student draws line **EN** as shown in Fig. 3.1.
On Fig. 3.1, measure the acute angle θ between the lines **LN** and **EN**.
An acute angle is an angle of less than 90°.

θ = ... [1]

(b) The student places two pins P_1 and P_2 on line **EN** as shown in Fig. 3.1.

(i) Measure distance *d* between pins P_1 and P_2.

d = ... cm [1]

(ii) State whether the two pins are a suitable distance apart for accurate ray tracing.
Explain your answer.

statement .....

explanation .....

..... [1]

(c) The student views the images of P_1 and P_2 through the block.
He places two pins P_3 and P_4 so that pins P_3 and P_4 and the images of P_1 and P_2 all appear exactly one behind the other.

Draw a line through P_3 and P_4. Extend this line to meet **CD**.

Label the point at which this line meets **CD** with the letter **F**. Label the lower end of this line with the letter **G**.

Extend line **EN** to approximately 5 cm below line **CD**.
Label the point at which this line crosses **CD** with the letter **H**. Label the lower end of this line with the letter **J**.

[1]

(d) **(i)** Measure the acute angle α between lines **CD** and **GF**.

α = ...°

Measure the acute angle β between lines **CD** and **JH**.

β = ...°
[1]

(ii) A student suggests that angle α should be equal to angle β.

State whether your results support this suggestion. Justify your answer by reference to values from your results.

statement .....

justification .....

.....
[2]

DO NOT WRITE IN THIS MARGIN
DO NOT WRITE IN THIS MARGIN
DO NOT WRITE IN THIS MARGIN
DO NOT WRITE IN THIS MARGIN
DO NOT WRITE IN THIS MARGIN

GradeMax

(e) Describe **two** techniques to use in this type of experiment to ensure results are accurate.

1 .....

.....

2 .....

.....

[2]

(f) Suggest **one** reason why different students, all doing this experiment carefully, may not obtain identical results.

.....

..... [1]

[Total: 11]

DO NOT WRITE IN THIS MARGIN
DO NOT WRITE IN THIS MARGIN
DO NOT WRITE IN THIS MARGIN
DO NOT WRITE IN THIS MARGIN
DO NOT WRITE IN THIS MARGIN

GradeMax

DO NOT WRITE IN THIS MARGIN
DO NOT WRITE IN THIS MARGIN
DO NOT WRITE IN THIS MARGIN
DO NOT WRITE IN THIS MARGIN
DO NOT WRITE IN THIS MARGIN

4 A student investigates the resistance of a wire.

Plan an experiment which enables him to investigate how the length of a wire affects the resistance of the wire.

Resistance R is calculated from the equation: $R = \frac{V}{I}$

where V is the potential difference (p.d.) across the wire and I is the current in the wire.

The apparatus available includes:

- a selection of wires
- a variable power supply
- an ammeter
- a voltmeter.

In your plan:

- list any additional apparatus needed
- complete Fig. 4.1 to show a voltmeter connected to measure the potential difference across the wire
- explain briefly how to do the experiment, including the measurements to take so that the resistance can be determined
- state the key variables to keep constant
- draw a table, or tables, with column headings, to show how to display the readings (you are **not** required to enter any readings in the table)
- explain how to use the readings to reach a conclusion.

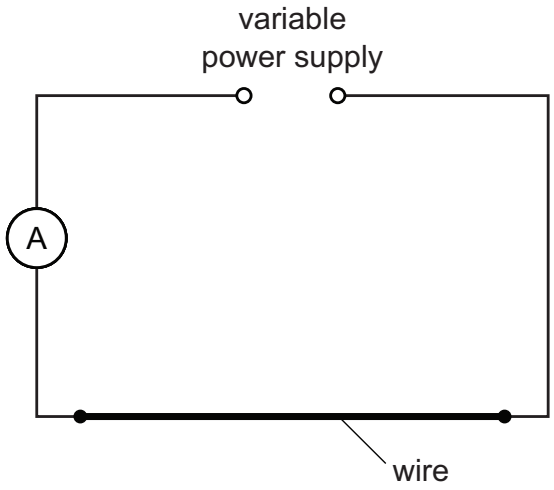

Fig. 4.1

GradeMax

.....

.....

.....

.....

.....

.....

.....

.....

.....

.....

.....

.....

.....

.....

.....

.....

.....

.....

.....

.....

..... [7]

DO NOT WRITE IN THIS MARGIN

DO NOT WRITE IN THIS MARGIN

DO NOT WRITE IN THIS MARGIN

DO NOT WRITE IN THIS MARGIN

DO NOT WRITE IN THIS MARGIN

GradeMax

BLANK PAGE

DO NOT WRITE IN THIS MARGIN
DO NOT WRITE IN THIS MARGIN
DO NOT WRITE IN THIS MARGIN
DO NOT WRITE IN THIS MARGIN
DO NOT WRITE IN THIS MARGIN

GradeMax

BLANK PAGE

DO NOT WRITE IN THIS MARGIN
DO NOT WRITE IN THIS MARGIN
DO NOT WRITE IN THIS MARGIN
DO NOT WRITE IN THIS MARGIN
DO NOT WRITE IN THIS MARGIN

Permission to reproduce items where third-party owned material protected by copyright is included has been sought and cleared where possible. Every reasonable effort has been made by the publisher (UCLES) to trace copyright holders, but if any items requiring clearance have unwittingly been included, the publisher will be pleased to make amends at the earliest possible opportunity.

To avoid the issue of disclosure of answer-related information to candidates, all copyright acknowledgements are reproduced online in the Cambridge Assessment International Education Copyright Acknowledgements Booklet. This is produced for each series of examinations and is freely available to download at www.cambridgeinternational.org after the live examination series.

Cambridge Assessment International Education is part of Cambridge Assessment. Cambridge Assessment is the brand name of the University of Cambridge Local Examinations Syndicate (UCLES), which is a department of the University of Cambridge.

© UCLES 2025